APPENDIX M
TRANSMISSION LINE ALIGNMENT TERRESTRIAL BIOLOGY TECHNICAL SUPPORT DOCUMENT

CÔTÉ GOLD PROJECT
TECHNICAL SUPPORT DOCUMENT: TERRESTRIAL BIOLOGY TRANSMISSION LINE ALTERNATIVES

FINAL

Submitted to:
IAMGOLD Corporation
401 Bay Street, Suite 3200
Toronto, Ontario
M5H 2Y4

Submitted by:
AMEC Environment & Infrastructure,
a Division of AMEC Americas Limited
160 Traders Blvd., Suite 110
Mississauga, Ontario
L4Z 3K7

February 2014

TC121522

TABLE OF CONTENTS

PAGE

GLOSSARY AND ABBREVIATIONS v

EXECUTIVE SUMMARY 1

1.0 INTRODUCTION AND PROJECT OVERVIEW 1-1

1.1 Terrestrial Biology for Transmission Line Alternatives 1-1

2.0 METHODOLOGY 2-1

2.1 Spatial Boundaries 2-1

2.2 Temporal Boundaries 2-1

2.3 Selection of Effects Assessment Indicators 2-1

2.3.1 Vegetation Communities 2-4

2.3.2 Ungulates - Moose 2-4

2.3.3 Furbearers - Wolves, Black Bears and American Marten 2-5

2.3.4 Bats 2-5

2.3.5 Upland Migratory Birds 2-6

2.3.6 Raptors 2-7

2.3.7 Species at Risk, Species of Special Concern and Provincially Rare Species 2-7

2.4 Prediction of Effects 2-7

3.0 PREDICTION OF EFFECTS: SHINING TREE ALIGNMENT 3-1

3.1 Construction Phase 3-1

3.1.1 Vegetation Communities 3-1

3.1.2 Ungulates – Moose 3-5

3.1.3 Furbearers – Wolves 3-11

3.1.4 Furbearers – American Marten 3-15

3.1.5 Furbearers – Black Bear 3-19

3.1.6 Bats 3-22

3.1.7 Migratory Birds 3-23

3.1.8 Raptors 3-37

3.1.9 Species at Risk - Eastern Whip-poor-will 3-40

3.1.10 Species of Special Concern and Provincially Rare Species 3-42

3.2 Operations Phase 3-47

3.2.1 Vegetation Communities 3-47

3.2.2 Ungulates – Moose 3-47

3.2.3 Furbearers – Wolves 3-48

3.2.4 Furbearers – American Marten 3-49

3.2.5 Furbearers – Black Bear 3-49

3.2.6 Bats 3-50

3.2.7 Migratory Birds 3-50

3.2.8 Raptors 3-51

3.2.9 Species at Risk - Eastern Whip-poor-will 3-52

3.2.10 Species of Special Concern and Provincially Rare Species 3-52
3.3 Closure Phase 3-53
3.3.1 Vegetation Communities 3-53
3.3.2 Ungulates – Moose 3-54
3.3.3 Furbearers – Wolves 3-54
3.3.4 Furbearers – American Marten 3-55
3.3.5 Furbearers – Black Bear 3-55
3.3.6 Bats 3-55
3.3.7 Migratory Birds 3-56
3.3.8 Raptors 3-57
3.3.9 Species at Risk - Eastern Whip-poor-will 3-57
3.3.10 Species of Special Concern and Provincially Rare Species 3-58
3.4 Post-Closure Phase and Summary of Effects through all Project Phases 3-59
3.4.1 Vegetation Communities 3-59
3.4.2 Ungulates – Moose 3-60
3.4.3 Furbearers – Wolves 3-60
3.4.4 Furbearers – American Marten 3-61
3.4.5 Furbearers – Black Bear 3-62
3.4.6 Bats 3-63
3.4.7 Migratory Birds 3-63
3.4.8 Raptors 3-64
3.4.9 Species at Risk - Eastern Whip-poor-will 3-65
3.4.10 Species of Special Concern and Provincially Rare Species 3-65
4.0 PREDICTION OF EFFECTS: CROSS-COUNTRY ALIGNMENT 4-1
4.1 Construction Phase 4-1
4.1.1 Vegetation Communities 4-1
4.1.2 Ungulates – Moose 4-6
4.1.3 Furbearers – Wolves 4-9
4.1.4 Furbearers – American Marten 4-11
4.1.5 Furbearers – Black Bears 4-14
4.1.6 Bats 4-16
4.1.7 Migratory Birds 4-18
4.1.8 Raptors 4-32
4.1.9 Species of Special Concern and Provincially Rare Species 4-34
4.2 Operations Phase 4-38
4.2.1 Vegetation Communities 4-38
4.2.2 Ungulates – Moose 4-39
4.2.3 Furbearers – Wolves 4-39
4.2.4 Furbearers – American Marten 4-40
4.2.5 Furbearers – Black Bear 4-41
4.2.6 Bats 4-41
4.2.7 Migratory Birds 4-42

4.2.8 Raptors 4-43
4.2.9 Species of Special Concern and Provincially Rare Species 4-44
4.3 Closure Phase 4-44
4.3.1 Vegetation Communities 4-44
4.3.2 Ungulates – Moose 4-45
4.3.3 Furbearers – Wolves 4-45
4.3.4 Furbearers – American Marten 4-46
4.3.5 Furbearers – Black Bear 4-46
4.3.6 Bats 4-47
4.3.7 Migratory Birds 4-47
4.3.8 Raptors 4-48
4.3.9 Species of Special Concern and Provincially Rare Species 4-49
4.4 Post-Closure Phase and Summary of Effects through all Project Phases 4-49
4.4.1 Vegetation Communities 4-49
4.4.2 Ungulates – Moose 4-50
4.4.3 Furbearers – Wolves 4-51
4.4.4 Furbearers – American Marten 4-52
4.4.5 Furbearers – Black Bear 4-53
4.4.6 Bats 4-53
4.4.7 Migratory Birds 4-54
4.4.8 Raptors 4-55
4.4.9 Species of Special Concern and Provincially Rare Species 4-56
5.0 GOVERNMENT, ABORIGINAL AND PUBLIC COMMENTS 5-1
6.0 CONCLUSIONS 6-1
7.0 REFERENCES 7-1

LIST OF TABLES

Table 2-1: Effects Assessment Indicators Selected for Terrestrial Biology for Transmission Line Alternatives 2-3
Table 3-1: Area (hectares) of Vegetation Removal for Various Vegetation Community Types for the Construction of the Shining Tree Transmission Line Corridor 3-2
Table 3-2: Potential Habitat Loss Effects on Wolf, Black Bear and American Marten 3-13
Table 3-3: American Marten Core Habitat 3-17
Table 3-4: Breeding Bird and PIF Diversity for Point Count Survey Clusters along the Shining Tree TLA 3-24
Table 3-5: Relative Comparison of Bird Species Abundances Recorded along the Shining Tree TLA Point Counts (PC) with those Recorded in 10 km^2 Areas 17MN and 17MP as Reported in Atlas of the Breeding Birds of Ontario (OBBA) 2001-2005 (Cadman et al., 2007) 3-25
Table 3-6: Potential Displacement of Breeding Bird Species Along the Shining Tree TLA Due to Habitat Loss 3-31
Table 3-7: Habitat Type Preferences and Amount of Habitat Lost for Species of Special Concern Occurring within the Shining Tree TLA 3-44
Table 4-1: Area (hectares) of Vegetation Removal for Various Vegetation Community Types for the Construction of the Cross-Country Transmission Line Corridor 4-2
Table 4-2: Potential Habitat Loss Effects on Wolf, Black Bear and American Marten 4-10
Table 4-3: American Marten Core Habitat 4-12
Table 4-4: Breeding Bird and PIF Diversity for Point Count Survey Clusters Along the Cross-Country TLA 4-19
Table 4-5: Relative Comparison of Bird Species Abundances Recorded Along the Cross-Country TLA Point Counts (PC) with those Recorded in 10 km^2 areas 17MN and 17MP as Reported in Atlas of the Breeding Birds of Ontario (OBBA) 2001-2005 (Cadman et al., 2007) 4-20
Table 4-6: Potential Displacement of Breeding Bird Species Along the Cross-Country TLA Due to Habitat Loss 4-26
Table 4-7: Habitat Type Preferences and Amount of Habitat Lost for Species of Special Concern Occurring within the Cross-Country TLA 4-34

LIST OF FIGURES

Figure 1: Project Site Location
Figure 2: Transmission Line Study Area
Figures 3a - e: Vegetation Communities
Figure 4: Moose Overwintering and Aquatic Feeding Areas
Figure 5: Moose Aquatic Carrying Capacity
Figure 6: Moose Dormant Season Carrying Capacity
Figure 7: Moose Overall Carrying Capacity
Figure 8: Marten Core Use Area and Bear Habitat

LIST OF APPENDICES

Appendix I: AMEC 2013 Transmission Line Alignments Baseline Survey Report

GLOSSARY AND ABBREVIATIONS

MNR	Ministry of Natural Resources
NHIC	Natural Heritage Information Centre
OLCP	Ontario Landbird Conservation Plan
PC	Point Count
PIF	Partners in Flight
ROW	Right-of-Way
SWH	Significant Wildlife Habitat
TLA	Transmission Line Alignment
WNS	White Nose Syndrome

EXECUTIVE SUMMARY

IAMGOLD Corporation is planning to develop the Côté Gold Project located approximately 20 kilometers (km) southwest of Gogama, 130 km southwest of Timmins and 200 km northwest of Sudbury. IAMGOLD has retained AMEC Environment & Infrastructure, a division of AMEC Americas Limited (AMEC), to carry out biological baseline studies along two proposed transmission line alignments (TLAs) and to support the federal and provincial environmental assessment (EA) efforts for the selected TLA. IAMGOLD is currently considering the following alternative alignments to feed power to their proposed Project site:

- an eastern TLA identified as the Shining Tree alignment, that follows 118.4 km of an existing 115 kV TLA from the City of Timmins to the Shining Tree Substation, and then travels west for 40.2 km to the Project site (total = 158.6 km); and
- a western TLA identified as the Cross-Country alignment, that follows 45.9 km of the same existing 115 kV TLA from the City of Timmins, and then travels southwest for 71.5 km to the Project site (total = 117.4 km).

Baseline environmental studies were conducted in 2013 to evaluate and document the terrestrial natural resources present within the local study areas of the two proposed TLAs. Each TLA local study area consists of 1 km from the centerline of each side of the proposed TLA, and the regional study area consists of 2 km from the centerline of each TLA. Baseline data were gathered using the standard approaches of literature review, observational surveys, data analysis and discussions with the Ontario Ministry of Natural Resources (MNR). AMEC conducted a comprehensive four season terrestrial field program to complement existing background information from the region and to provide qualitative and quantitative information on wildlife and vegetation communities within the regional study area.

At the completion of the 2013 baseline environmental studies an analysis was conducted to predict effects the Côté Gold Project may have on identified environmental indicators, taking into consideration the application of avoidance, mitigation and reclamation measures to reduce or eliminate residual effects. Environmental indicators are those aspects of the natural environment that are particularly notable or valued because of their ecological, scientific or resource importance, and that have a potential to be adversely affected by the Côté Gold Project development. Based on the criteria listed in this report, the following environmental indicators were considered during the analysis of the two proposed TLAs: i) vegetation communities, plants with special conservation status or rarity in the province, and traditional use plants, ii) ungulates (Moose), iii) furbearers (Wolves, Black Bear, American Marten), iv) upland migratory birds, v) raptors, and vi) Species at Risk.

The analysis to predict potential Project effects determined that for both the Shining Tree and the Cross-Country TLA, short-term displacement of wildlife species found along the footprint will occur during the construction and closure phases of the Project due to the temporary presence of Project personnel and equipment, but displaced species and their preferred habitats are

common throughout both the local study area and regional study area and these species will be able to settle in nearby suitable habitats. Conducting construction and closure activities between August and April would avoid sensitive summer breeding seasons for wildlife (May to the end of July). Later winter habitat areas for Moose (upland coniferous areas) should also be avoided in January and February when Moose can be nutritionally and energetically stressed.

Some wildlife species will avoid the TLA footprint during the operations phase (for instance interior species that avoid open fields or linear corridors) but these species and their preferred habitats are also common throughout both the local study area and regional study area, and these species will be able to settle in nearby suitable habitats, and will eventually return to the footprint after natural revegetation during the post-closure phase.

1.0 INTRODUCTION AND PROJECT OVERVIEW

The Côté Gold Project (the Project) is an advanced stage gold exploration Project located in the Chester and Neville Townships, District of Sudbury, in northeastern Ontario, approximately 20 kilometres (km) southwest of Gogama, 130 km southwest of Timmins, and 200 km northwest of Sudbury (see Figure 1). IAMGOLD proposes to construct, operate and eventually rehabilitate a new open pit gold mine on the property.

1.1 Terrestrial Biology for Transmission Line Alternatives

Baseline environmental studies were conducted in 2013 to evaluate and document the terrestrial natural resources present within the local study areas of the proposed TLAs. The baseline surveys were designed to:

- establish the presence of natural areas identified as having significant or unique natural heritage features including earth and life science areas of natural and scientific interest, provincial and national parks, conservation areas, international biological program sites, nature reserves, provincially significant wetlands and other unevaluated wetlands;
- inventory vegetation found in the local study area through the establishment of a flora species list and characterize vegetation assemblages present in the local study area through the establishment of vegetation communities present;
- inventory terrestrial wildlife present through field surveys targeting multiple guilds of wildlife including breeding diurnal landbirds, breeding nocturnal landbirds, marsh breeding birds, mammals, bats, amphibians, and insects;
- establish the presence of plant and wildlife Species at Risk and Provincially rare species;
- establish the presence of significant wildlife habitat (SWH) in the form of seasonal concentration areas, specialized habitats, habitat of species of conservation concern and animal movement corridors; and
- establish indices of abundance and trends in seasonal habitat use and behaviour for effects assessment indicators.

Baseline data were gathered using the standard approaches of literature review, observation, sample collection, data analysis and discussions with the Ontario Ministry of Natural Resources (MNR). AMEC conducted a comprehensive four season terrestrial field program to complement existing information from the region and provide qualitative and quantitative information on wildlife and vegetation communities within the regional study area.

2.0 METHODOLOGY

2.1 Spatial Boundaries

IAMGOLD Corporation is planning to develop the Côté Gold Project located approximately 20 kilometers (km) southwest of Gogama, 130 km southwest of Timmins and 200 km northwest of Sudbury. IAMGOLD has retained AMEC Environment & Infrastructure, a division of AMEC Americas Limited (AMEC), to carry out biological baseline studies along two proposed transmission line alignments (TLAs) and to support the federal and provincial environmental assessment (EA) efforts for the selected TLA. IAMGOLD is currently considering the following alternative alignments to feed power to their proposed Project site:

- an eastern TLA identified as the Shining Tree alignment, that follows 118.4 km of an existing 115 kV TLA from the City of Timmins to the Shining Tree Substation, and then travels west for 40.2 km to the Project site (total = 158.6 km); and
- a western TLA identified as the Cross-Country alignment, that follows 45.9 km of the same existing 115 kV TLA from the City of Timmins, and then travels southwest for 71.5 km to the Project site (total = 117.4 km).

The spatial boundaries considered during baseline studies and for predicting Project effects for the Shining Tree and Cross-Country TLA include the following:

- local study areas: areas within 1 km from the centerline of each side of the proposed TLA; and
- regional study area: areas within 2 km from the centerline of each side of the proposed TLA (see Figure 2).

2.2 Temporal Boundaries

The temporal boundaries of the EA will span all phases of the Project:

- construction: 2 years;
- operations: 15 years;
- closure: 2 years; and
- post-closure: 50 - 80 years.

2.3 Selection of Effects Assessment Indicators

An analysis of the potential Project related effects on identified effects assessment indicators has been conducted taking into consideration the application of avoidance, mitigation and reclamation measures to reduce or eliminate residual effects. Effects assessment indicators are those aspects of the natural environment that are particularly notable or valued because of their ecological, scientific or resource importance, and that have a potential to be adversely affected by the Côté Gold Project development.

An effects assessment indicator can be a particular habitat, an environmental feature, a particular assemblage of plants or animals, a particular species of plant or animal, or an indicator of environmental health. Data from extensive environmental baseline studies have been used to identify effects assessment indicators for the Côté Gold Project that meet one or more of the following criteria:

- area of notable biological diversity;
- significant habitat for locally important species;
- significant habitat for uncommon, rare or unusual species;
- Species at Risk;
- important corridor or linkage for fish and/or wildlife movement;
- notable species or species groups;
- indicator of environmental health;
- important component to the function of other ecosystem elements or functions;
- aboriginal cultural significance;
- economic, social or cultural significance (such as identified through Traditional Knowledge; TK);
- educational, scientific, or aesthetic interest; and
- provincial, Federal or International significance.

Based on the criteria listed above, the following effects assessment indicators were considered during the analysis of potential effects of the two proposed TLAs (Shining Tree and Cross-Country):

- vegetation communities, including plants with special conservation status or rarity in the province, and traditional use plants;
- ungulates (Moose);
- furbearers (Wolves, Black Bear, American Marten);
- bats;
- migratory birds;
- raptors;
- Species at Risk, species of *Special Concern* and provincially rare species.

The rationale for selection of each effects assessment indicator and measures used when predicting Project effects are discussed in detail below and are summarized in Table 2-1.

Table 2-1: Effects Assessment Indicators Selected for Terrestrial Biology for Transmission Line Alternatives

Effect Assessment Indicator	Rationale for Selection
Vegetation Communities	• Areas of notable biological diversity; • Significant habitat for locally important species • Important corridors or linkages for fish and/or wildlife movement • Significant habitat for Species at Risk (migratory birds and bat species) • Important components to the function of other ecosystem elements or functions • Economic, social or cultural significance (such as hunting) • Educational, scientific or aesthetic significance
Ungulates: Moose	• An indication of environmental health • An important component to the function of other ecosystem elements or functions • Economic, social or cultural significance (such as hunting) • Educational, scientific or aesthetic significance
Furbearers: Wolves; American Marten; Black Bear	• An indication of environmental health • Important components to the function of other ecosystem elements or functions • Notable species or species groups • Economic, social or cultural significance (such as trapping) • Educational, scientific or aesthetic significance
Bats	• An indication of environmental health • Important components to the function of other ecosystem elements or functions • Notable species or species groups • Economic, social or cultural significance • Educational, scientific or aesthetic significance
Migratory Birds	• An indication of environmental health • Important components to the function of other ecosystem elements or functions; • Notable biological diversity; • Significant habitat for locally important species and Species at Risk • Economic, social or cultural significance • Educational, scientific or aesthetic significance.
Raptors	• An indication of environmental health • Important components to the function of other ecosystem elements or functions • Notable species or species groups • Economic, social or cultural significance • Educational, scientific or aesthetic significance

Effect Assessment Indicator	Rationale for Selection
Species at Risk, Species of *Special Concern* and Provincially Rare Species	• An indication of environmental health • Important components to the function of other ecosystem elements or functions • Notable species or species groups • Economic, social or cultural significance • Educational, scientific or aesthetic significance

2.3.1 Vegetation Communities

Vegetation communities (including plants with special conservation status or rarity in the province, and traditional use plants) and associated terrestrial habitat provide or potentially provide:

- areas of notable biological diversity;
- significant habitat for locally important species;
- important corridors or linkages for fish and/or wildlife movement;
- significant habitat for Species at Risk (migratory birds and bat species);
- important components to the function of other ecosystem elements or functions;
- economic, social or cultural significance (such as hunting); and
- educational, scientific or aesthetic significance.

They are thus an important component to the function of other ecosystem elements and are of social and economic interest.

The primary forest cover types within the proposed Shining Tree and Cross-Country TLA footprints include deciduous mixed forest, coniferous forest and coniferous swamp. Deciduous mixed forest was dominated by White Birch and Trembling Aspen while coniferous forest and swamp was dominated by Black Spruce and to a lesser extent Jack Pine.

There are no rare or unusual plant communities in the local study area of the transmission line alternative but the area contains a reasonable measure of biological diversity as a result of the mix of wetlands, forested areas and exposed rocklands. Furthermore, no plant Species at Risk or species of special conservation status or rarity in the province were recorded.

2.3.2 Ungulates - Moose

Ungulates present in the Shining Tree and Cross-Country local study areas and regional study areas include Moose and, to a lesser degree, White-tailed Deer. Moose were selected as an effects assessment indicator because they provide or potentially provide:

- an indication of environmental health;
- an important component to the function of other ecosystem elements or functions;
- economic, social or cultural significance (such as hunting); and
- educational, scientific or aesthetic significance.

Moose are important as they provide a principal food source for wolves (Gray Wolf and Eastern Wolf) and are a game species hunted by humans.

2.3.3 Furbearers - Wolves, Black Bears and American Marten

Furbearers including predators such as wolves, Black Bears and American Marten are important effects assessment indicators due to their position atop of the food chain and their sensitivity to direct and indirect disturbance by humans. Wolves are important predators of Moose, White-tailed Deer and Beaver and require large tracts of undisturbed forest and wetland habitat. American Marten inhabit mature forest and are important predators of a variety of other small mammals. Lynx and Beaver typically would also be considered important effects assessment indicators as they are trapped in the region, however, baseline studies found very little evidence of these two species in the regional study area and therefore, these species were not selected as indicators for this analysis.

Furbearers were selected as an effects assessment indicator because they provide or potentially provide:

- an indication of environmental health;
- important components to the function of other ecosystem elements or functions;
- notable species or species groups;
- economic, social or cultural significance (such as trapping); and
- educational, scientific or aesthetic significance.

2.3.4 Bats

Four species of bats were confirmed within the in the Shining Tree and Cross-Country local study areas and regional study areas. These included two tree-roosting species (Hoary Bat and Red Bat) and two cavity-roosting species (Little Brown Myotis and Silver-haired Bat). Hoary Bat, Red Bat and Silver-haired Bat are migratory species and both Hoary Bat and Silver-haired Bat are expected to breed in the local study area. Little Brown Myotis occurs year-round in Ontario and use hibernacula during the winter. Little Brown Myotis is included on the Species at Risk in Ontario list as *Endangered* and is protected under the provincial Endangered Species Act. All other Ontario bat species are protected under the Fish and Wildlife Conservation Act.

The Ontario Little Brown Myotis population is at risk of decline due to their low reproduction rate, communal hibernating behaviour and the recent spread of a fatal fungus known as White Nose Syndrome (WNS). WNS is caused by a fungal pathogen (*Pseudogymnoascus destructans*) that has been devastating bat populations across eastern North America. It grows on the muzzle, ears and wings of hibernating bats and spreads quickly between individuals that hibernate in large groups. WNS causes bats to prematurely arouse from hibernation in the winter and subsequently leads to death from starvation due to excessive activity without a readily available food source.

Bats were selected as an effects assessment indicator because they provide or potentially provide:

- an indication of environmental health;
- important components to the function of other ecosystem elements or functions;
- notable species or species groups;
- economic, social or cultural significance (such as trapping); and
- educational, scientific or aesthetic significance.

2.3.5 Upland Migratory Birds

A total of 129 bird species are known to occur within the regional study area, of which 122 are likely to breed there, and upland migratory birds account for 79% of the breeding species present (96 or 122 species). Upland migratory birds have preferences for different vegetation communities and/or habitat structures, and therefore, considering migratory birds as an effects assessment indicator allows for an analysis across numerous habitat types that include significant habitat for locally important species and for Species at Risk. Since most migratory birds have much smaller home ranges than furbearer and ungulate species, and are usually found in dense concentrations, they are ideally suited to monitoring local habitat health.

Upland migratory birds were selected as an effects assessment indicator because they provide or potentially provide:

- an indication of environmental health;
- important components to the function of other ecosystem elements or functions;
- notable biological diversity;
- significant habitat for locally important species and Species at Risk;
- economic, social or cultural significance; and
- educational, scientific or aesthetic significance.

2.3.6 Raptors

Raptors include eagles, osprey, hawks, harriers, falcons, owls and ravens. Twelve species of raptors have been recorded along the two candidate TLAs, reflective of the variety of habitats available therein. This guild predominantly requires undisturbed mature forest, marsh, or treed lakeshores for nesting. Raptors represent important top or mid-trophic predators in forested, open-country, and aquatic habitats. Raptors are of ecological and cultural significance, particularly in the case of the Bald Eagle which is an important symbol to Aboriginal groups. Bald Eagles are listed provincially as a species of special concern and are known to nest in proximity to the local study area.

Raptors were selected as an effects assessment indicator because they provide or potentially provide:

- an indication of environmental health;
- important components to the function of other ecosystem elements or functions;
- notable species or species groups;
- economic, social or cultural significance; and
- educational, scientific or aesthetic significance.

2.3.7 Species at Risk, Species of Special Concern and Provincially Rare Species

Eight Species at Risk are known or are expected to occur within the Shining Tree and Cross-Country local study area including Little Brown Myotis (*Endangered*), Eastern Whip-poor-will (*Threatened*), Canada Warbler (*Special Concern*), Bald Eagle (*Special Concern*), Common Nighthawk (*Special Concern*), Olive-sided Flycatcher (*Special Concern*), Rusty Blackbird (*Special Concern*), and Snapping Turtle (*Special Concern*).

Species at Risk were selected as an effects assessment indicator because they provide or potentially provide:

- an indication of environmental health;
- important components to the function of other ecosystem elements or functions;
- notable species or species groups;
- economic, social or cultural significance; and
- educational, scientific or aesthetic significance.

2.4 Prediction of Effects

A prediction of effects analysis has been conducted in order to identify potential environmental effects the Project may have on the effects assessment indicators, taking into consideration the

application of avoidance, mitigation and post-closure reclamation measures to reduce or eliminate residual effects. Data gathered through a literature review and through field studies were used to predict effects of the Project on flora and fauna and their habitat within the local study area.

The potential effects of the Shining Tree TLA construction, operation, closure and post-closure phases are discussed in Sections 3.1, 3.2, 3.3 and 3.4 respectively. The overall prediction of effects that the Shining Tree TLA may have on each effects assessment indicator, through all Project phases, is summarized in Section 3.4 once post-closure effects have been considered. These topics are discussed in a similar order for the Cross-Country TLA in Section 4.0.

3.0 PREDICTION OF EFFECTS: SHINING TREE ALIGNMENT

3.1 Construction Phase

3.1.1 Vegetation Communities

Figure 3 shows the proposed Shining Tree TLA footprint in relation to existing vegetation community types. Overall, the Shining Tree TLA footprint is 156.6 km long and 45 m wide along an existing transmission line and an additional 5.7 km long and 50 m wide along new clearing by the proposed mine site. A total of 679.7 ha of vegetation will be cleared in the Shining Tree TLA footprint. The primary forest cover types within the proposed Shining Tree TLA footprint and the number of hectares expected to be cleared for each during construction include:

- deciduous mixed forest (271.1 ha cleared, or 36.7% of the total footprint);
- coniferous forest (267.7 ha; 36.3%);
- coniferous swamp (128.6 ha; 17.4%); and
- replanted jack pine areas (12.4 ha; 1.7%).

Some of these areas have been harvested in the past and were in a state of regeneration. Combined, deciduous mixed forest, coniferous forest, coniferous swamp and replanted jack pine areas totalled 92.1% (679.7 ha) of the proposed Shining Tree TLA footprint.

The remaining vegetation community types found within the Shining Tree TLA footprint consist of the following wetland vegetation and aquatic community types:

- tall shrub swamp (16.9 ha; 2.3%);
- low shrub fen (2.7 ha; 0.4%);
- narrow leaved emergent marsh (5.9 ha; 0.8%);
- miscellaneous wetlands (5.4 ha; 0.7%); and
- open water bodies (19.2 ha; 2.6%).

These wetland vegetation and aquatic community types accounted for 50.1 ha (6.8%) of the proposed footprint but it should be noted that coniferous swamp (128.6 ha; 17.4%) is also considered a wetland community and therefore, 178.7 ha (24.2%) of the proposed footprint is considered to be wetlands. Excluding the coniferous swamp which consists of trees and will require clearing for the construction of the transmission line, wherever possible, all other wetlands and water bodies will be fully spanned (clear spanned) and as such there will be little to no direct footprint of the TLA within these habitats. Therefore, little to no aquatic or wetland habitat (excluding the coniferous swamp) will be directly affected (lost) from the construction of the Shining Tree TLA. There is the potential for wetlands, water bodies and watercourses to be indirectly affected through sedimentation during construction (during forest clearing). However,

this can be minimized by implementing standardized industry best management practices along with various mitigation measures discussed below.

Anthropogenic features such as highways and other roads, railways and cottages accounted for 7.9 ha (1.1%) of the proposed Shining Tree TLA footprint.

Table 3-1 summarizes the expected effect on vegetation communities (ELC ecosite categories) from development of the Shining Tree TLA. Environmental effects to vegetation communities within the footprint are direct (clearing) and are localized. The total area of forest habitat that would be displaced by the proposed Shining Tree TLA development is approximately 679.7 ha (92.1% of the entire ROW disturbance). All of the vegetation communities present within the Shining Tree TLA ROW are found within the remainder of study area and in the larger region. No locally significant plant communities have been identified within the proposed footprint and no provincially rare plant species or community types were located.

Table 3-1: Area (hectares) of Vegetation Removal for Various Vegetation Community Types for the Construction of the Shining Tree Transmission Line Corridor

Boreal ELC Community Type	ELC Code	Area (ha) Removed in Constructing the Shining Tree TLA
Very Shallow, Dry to Fresh: Pine - Black Spruce Conifer / Dry, Sandy: Jack Pine – Black Spruce Dominated / Fresh, Silty-Fine Loamy: Spruce - Fir Conifer	B012 / B034 / 104	10.3
Very Shallow, Dry to Fresh: Pine - Black Spruce Conifer / Dry to Fresh, Coarse: Jack Pine - Black Spruce Dominated / Moist, Fine: Black Spruce - Pine Conifer	B012 / B049 / B114	18.8
Very Shallow, Dry to Fresh: Pine - Black Spruce Conifer / Dry to Fresh, Coarse: Jack Pine - Black Spruce Dominated / Fresh, Silty-Fine Loamy: Spruce - Fir Conifer / Moist, Fine: Black Spruce - Pine Conifer	B012 / B049 / B104 / B114	56.0
Very Shallow, Dry to Fresh: Conifer / Dry, Sandy: Jack Pine – Black Spruce Dominated	B014 / B034	1.2
Very Shallow, Dry to Fresh: Conifer / Fresh, Silty-Fine Loamy: Spruce - Fir Conifer	B014 / 104	12.8
Dry, Sandy: Jack Pine – Black Spruce Dominated	B034	94.1
Dry, Sandy: Jack Pine – Black Spruce Dominated / Fresh, Silty-Fine Loamy: Spruce - Fir Conifer	B034 / B104	11.0
Dry, Sandy: Red Pine - White Pine Dominated	B040	9.7
Dry to Fresh, Coarse: Jack Pine - Black Spruce Dominated	B049	9.8
Dry to Fresh, Coarse: Jack Pine - Black Spruce Dominated / Moist, Fine: Black Spruce - Pine Conifer	B049 / B114	0.2
Dry to Fresh, Coarse: Pine – Black Spruce Conifer	B050	12.2
Dry to Fresh, Coarse: Aspen - Birch Hardwood	B055	115.5
Dry to Fresh, Coarse: Maple Hardwood	B058	0.1
Fresh, Clayey: Elm - Ash Hardwood	B082	4.8
Fresh, Silty-Fine Loamy: Spruce - Fir Conifer	B083	55.4
Fresh, Silty-Fine Loamy: Spruce - Fir Conifer	B104	121.8
Moist, Fine: Black Spruce - Pine Conifer	B114	5.0

Boreal ELC Community Type	ELC Code	Area (ha) Removed in Constructing the Shining Tree TLA
Organic Poor Conifer Swamp	B127	42.7
Organic Intermediate Conifer Swamp	B128	6.0
Organic Rich Conifer Swamp	B129	31.9
Mineral Thicket Swamp / Organic Thicket Swamp	B134 / B135	16.8
Sparse Treed Fen	B136	1.8
Sparse Treed Bog	B137	12.1
Poor Fen / Open Moderately Rich Fen	B139 / B140	0.8
Mineral Meadow Marsh / Organic Meadow Marsh	B142 / B144	5.9
Mineral Poor Conifer Swamp	B222	18.8
Mineral Intermediate Conifer Swamp	B223	3.9
Mineral Rich Conifer Swamp	B224	13.3
Jack Pine Regeneration / Cut	n/a	12.4
Water	n/a	19.2
Wetland	n/a	5.4
Anthropogenic	n/a	7.9
Total	n/a	**737.6**

The Shining Tree TLA design has focused on expanding an existing ROW and thereby widening a corridor that involves lands that have been previously disturbed. This reduces infrastructure requirements (roads) to access the ROW and reduces clearing of non-disturbed vegetation communities. Widening an existing ROW also limits the creation of new edge effects through the region, compared to creating a new ROW through non-disturbed lands.

A total of 271.1 ha of deciduous mixed forest will be cleared during construction of the Shining Tree TLA footprint. Most of the affected hardwood forests in the local study area are relatively young age or mid-aged due to historical and more recent area harvesting and fire activity. Regenerating forest and mid-aged forest with developing understory provides good Moose browse. Mid-age forest provides suitable habitat for a wide variety of area sensitive birds, while the interface of regenerating forest and more mature forest also provides suitable foraging habitat for SAR species such as Eastern Whip-poor-will and Golden-winged Warbler. The Shining Tree TLA footprint also overlaps with approximately 408.7 ha of coniferous forest (including coniferous swamp and replanted jack pine areas). These vegetation community types may provide late winter Moose habitat, habitat for furbearers and may contribute to woodlands supporting area sensitive breeding bird species. The Shining Tree TLA footprint also overlaps with approximately 178.7 ha of wetland communities (including coniferous swamp). No bog communities will be directly affected. Wetlands provide habitat for Beavers and other furbearers, Snapping Turtles, waterfowl, amphibians and fish. Effects of Shining Tree TLA construction, operation and closure phases on wildlife are discussed in detail below.

There are no existing agricultural communities or cultural meadow communities within the proposed Shining Tree TLA footprint. Therefore, no open country breeding bird habitats, which may support sensitive breeding bird communities, Sharp-tailed Grouse lekking sites or SAR (Bobolink and Eastern Meadowlark) were present.

There is a history of forestry and fire in the regional study area and this is reflected in the vegetation structure. Vegetation communities include young and mature stands of Trembling Aspen, Balsam Poplar and to a lesser extent White Birch, Balsam Fir and White Spruce, all of which are considered pioneer species, colonizing recently disturbed areas. Logging has taken place in several areas within the regional study area, as well as in the surrounding landscape.

Without mitigation, an increase in vehicle traffic along the TLA and associated service roads will result in increased dust generation and deposition on vegetation. Dust can affect photosynthesis, respiration and transpiration in plants and allow the penetration of phytotoxic gaseous pollutants (Farmer 1993). Overall, dust deposition on plants results in some visible injury symptoms and a general decrease in plant productivity. The structure of vegetation communities may also be affected. Those vegetation communities that are dominated by epiphytic lichen and Sphagnum moss species are typically the most sensitive of those studied (Farmer 1993).

IAMGOLD has adopted an engineering and development strategy that focuses on avoidance and minimization of environmental effects through sound and practical Project design, including the evaluation of two alternatives TLAs and the determination of a preferred alternative. The principal mitigation measures that are proposed to limit short and long term adverse effects to local vegetation communities include:

- minimize the widening of the existing ROW to 45 m to limit the extent of vegetation clearing needed;
- retaining existing low ground cover thereby minimizing vegetation clearing and allowing for the maintenance of root masses and ground vegetation that will reduce the potential for erosion and encourage continued vegetation growth through operations and beyond closure;
- construct in winter to minimize the potential for ground disturbance and soil erosion during construction and to reduce the necessity for creation of additional permanent access roads;
- construct in winter to avoid tree and brush clearing and to avoid sensitive wildlife breeding seasons such as the migratory bird nesting season, where applicable;
- maintain vegetated buffers adjacent to creek and river transmission line crossings (and tall vegetation along major rivers where conductors are unlikely to be affected by future growth);

- use existing permanent road / trail infrastructure to avoid crossing creeks and rivers. When necessary, cross creeks and rivers during winter using ice bridges wherever practical, ensuring that the ice bridges are sufficiently built up above the bed so as not to temporarily block river or creek flow (and providing mitigation should ice damming at spring melt be of concern);
- avoid placement of permanent structures in water bodies and to the extent practicable, in low-lying areas (difficult for some portions of the existing ROW);
- use of industry best management practices for Project design and construction management; and
- minimizing dust production along TLA service roads. The implementation of dust suppression methods such as road watering are not necessary along TLA service roads due to the infrequency of use by service vehicles. However, minimizing the speed of service vehicles along these roads will lessen dust production and limit the zone of influence.

TLA planning efforts for the Shining Tree TLA have focused, where practical, on using lands that have been previously disturbed by the existing ROW and other past anthropogenic disturbance such as logging. Developing a TLA along the existing ROW may be advantageous as it reduces the location of vegetation clearing to an already disturbed site and limits the creation of new negative edge effects. The clearing of sensitive habitats including riparian areas will be avoided where reasonably practical as these riparian habitats are particularly productive for a number of wildlife species and provide an important function in water quality protection.

3.1.2 Ungulates – Moose

3.1.2.1 Relevant Background Information

In Ontario, the Moose population and its habitat is managed using an ecological approach that is implemented in accordance with Ontario's Cervid Ecological Framework and Moose Management Policy (MNR 2009a and 2009b) and within each Wildlife Management Unit (WMU). The proposed transmission line alignments (TLA) intersect three units, WMU 29, WMU 31 and WMU 34. Detailed Moose population data, densities and population targets are available for each WMU (MNR 2013a, MNR 2013b, MNR 2013c).

Site specific data on Moose distribution and abundance within the local and regional study areas was collected through winter aerial surveys for mammalian tracks and sightings, summer surveys of vegetation, existing MNR data from forest management plans (FMPs), outputs from the Ontario Wildlife Habitat Assessment Moose Model (OWHAM) and simulation results from the Bioclimatic Moose Model (Elkie et al., 2013). OWHAM estimates landscape potential, expressed as relative carrying capacity (Naylor et al., 1999). Each of these models and the simulated range of natural variation can be found in Ontario's Landscape Tool (Elkie et al., 2013).

The OWHAM models are calibrated to Great Lakes – St. Lawrence (GL-SL) forest types. MNR cross referenced GL-SL forest units with boreal region forest units such as Ecoregion 3E and applied OWHAM against all simulations to estimate habitat conditions (Elkie et al., 2013). As further calibration and validation of the Boreal version is recommended by MNR (Elkie et al., 2013) the OWHAM modelled habitat conditions are assumed to correspond and identify suitable, higher quality summer aquatic feeding areas and dormant season over - wintering habitats relative to lower quality areas to some degree. It is assumed that any direct effects to higher quality areas have the potential to be more significant to local Moose populations than effects to lower quality areas.

Moose are associated with riparian habitat, especially areas featuring willow, a key forage species (MNR, 2013a). In the absence of such habitat, Moose select stands that originate after fire or logging, which features early successional vegetation (Doerr, 1983). Other important habitat qualities include areas for aquatic feeding, areas of coniferous cover and mineral licks (Palidwor et al., 1995). Habitat use by Moose varies across the seasons. In the late spring and summer months, Moose spend considerable time foraging in aquatic feeding areas found in cool water lakes, along medium-sized and shallow rivers and on shallow basins of cold water lakes where abundant aquatic vegetation occurs (MNR, 2013a). Winter habitat is also critical component of Moose range.

Cover in winter is particularly needed because it helps reduce snow depths and provides relief from thermal stress associated with open areas (Bangs et al., 1985). Early winter habitat is primarily made up of mature or over-mature, open canopy, mixed-wood stands with less than 60 percent tree cover, as well areas that had been burned or cutover about five to twenty years ago (MNR, 2013a). Late winter habitat consists of denser stands of upland mature conifer with good overhead cover (MNR 2013a). Moose have been found to generally remain within 100 m of forest edge or cover when browsing in open areas (Bangs et al., 1985).

Several sources of information were compiled and reviewed in order to predict the effects that each proposed TLA may have on local Moose populations and their key habitat attributes. These information sources included the following: known seasonal preferences and needs by local Moose, site specific locations of Moose from aerial surveys, provincially derived Moose densities from MNR model estimates, locations of known aquatic feeding areas, locations of known over-wintering areas from FMPs and simulated habitat conditions from OWHAM.

Habitat fragmentation is the change in configuration of habitat as habitat cover decreases (Grossman et al., 2008). Effects of fragmentation include increased forest edge, reduced forest interior habitat and increased isolation of forest patches. The effect of landscape fragmentation on a variety of wildlife species has been documented (Dyer et al., 2001; Courbin et al., 2009). The effect of the direct habitat loss from the removal of vegetation along a linear corridor (such as a transmission line or road corridor) is minor for most species compared to the indirect effects such as alteration of predator - prey dynamics, increasing competition, the potential for

disease and increased mortality by humans due to ease of access. Potential effects of fragmentation can be greatest on local wildlife communities where the landscape has largely remained undisturbed.

Linear corridors may create or remove habitat for Moose depending on the habitat types they are traversing. Any linear development through a closed forest will open up the canopy, creating edges that encourage the growth of shrubs, preferred browse species is beneficial for Moose. Conversely, corridors that traverse riparian areas habitat that is already good for foraging Moose remove habitat, reducing the carrying capacity of the landscape for Moose (Jalkotzy et al., 1997). The degree of effect is proportional to the width and length of the disturbance corridor. Linear corridors may also be considered habitat enhancement if these corridors act as travel corridors for Moose in otherwise unsuitable habitat (Del Frate and Spraker, 1991). Ease of movement along corridors makes them attractive travel routes for Moose in habitats with otherwise impenetrable vegetation. This is particularly true in winter in northern climates where deep snow hinder Moose movements and these ROW are cleared of snow (Hobbs 1989, Jalkotzy et al., 1997). However, mortality associated with the use of these corridors for travel probably more than offset any benefits Moose may derive from using them.

In general, Moose avoid human related activity. The development of roads into new areas allows for hunting in previously inaccessible areas. Moose have been found to avoid habitat in the vicinity of roads because of human activity, this response is most evident in hunted populations (Jalkotzky, 1997). Mortality associated with ROWs may occur due to an increase in human access along the corridor, which could result in an increase in hunting or poaching (Jalkotzy et al., 1997; Ricard and Doucet, 1999). There may be a local effect from increased hunting; however this effect may not to be necessarily significant at the population level (Ricard and Doucet, 1999). Wolves can benefit from ROWs through increasing hunting efficiency and studies have demonstrated that they respond positively to linear corridors through increased hunting opportunities for ungulate species. Wolves have been found to kill Moose in locations which are further from forest edges than Moose are generally found and in locations characterized by lower road densities (Kunkel and Pletscher, 2000).

Moose populations are also susceptible to infection by the parasite *Parelaphostrongylus tenuis*, which causes a disabling neurological disease which can end in death (Palidwor et al., 1995). The natural host for the disease is white-tailed deer and Moose become susceptible when the habitats of the two species overlap. Deer will use ROWs for foraging and over wintering opportunities; therefore creation or enhancement of ROWs can lead to greater overlap between these species and greater opportunities for parasite infections (Jalkotzy et al., 1997).

Over the long term, transmission lines are expected to have few effects on the ability of Moose to utilize available habitat. Creation of linear corridors can be considered a habitat enhancement as they can serve as travel corridors in otherwise unsuitable habitat (Jalkotzky et al., 1997) and habitat may actually become enhanced after construction due to growth of preferred browse

species along the ROWs and the surrounding forest (Richard and Doucet, 1999). Early successional habitat created by the ROW appears to be of equal value to Moose as the forest habitat was prior to bring disrupted, Moose are often frequently observed within or directly adjacent ROWs before and after construction. The construction phase itself may be disruptive to Moose (Jalkotzy et al., 1997). Pipeline construction was found to disrupt Moose movement over relatively large areas along the route for days at a time (Jalkotzy et al., 1997), however disruption from construction would expect to be temporary and negative effects are expected to be reversible upon Project decommissioning and rehabilitation.

3.1.2.2 Effects of Construction Phase on Ungulates – Moose

Potential adverse effects to local Moose populations along the Shining Tree TLA footprint may include i) direct loss of habitat due to vegetation clearing, ii) long-term displacement due to habitat loss, iii) short-term displacement due to disturbance during construction, iv) potential habitat abandonment along the edges of uncut forest, iv) increased hunting by humans; vi) increased predation by wolves, and vii) increased risk of parasites from overlapping habitat use with deer. Direct mortality is not an expected effect from the construction of the Shining Tree TLA and is discussed further below.

Moose were observed throughout the regional study area including 21 individual sightings during the winter aerial survey and one sighting during the spring aerial survey (see Appendix I) of which, 62% were along the Shining Tree TLA (see Figure 4). In May and June, Moose were commonly observed incidentally along Highway 144 and Highway 560. Winter Moose sightings and tracks were typically associated with clearcuts and regenerating forests, particularly those dominated by poplar and abundant young saplings that provide winter browse species.

Overall 86% (636 ha) of the Shining Tree TLA has been included in the Ecoregion 3E bioclimatic Moose model; 14% (101 ha) closest to the mine site is part of Ecoregion 4E and does not have modelled carrying capacities available (see Figure 5), however, Moose habitat data including overwintering and aquatic feeding areas from FMPs is available for this southern portion of the local and regional study areas (see Figure 4). The majority of the Shining Tree TLA can support overall moderate densities of Moose (see Figure 5). The potential for high Moose carrying capacities along this alignment occur adjacent to Mattagami Lake including Mattagami First Nations Reserve. The lowest potential carrying capacities occur along the southern portion of the TLA approaching the proposed mine site location (see Figure 5).

Overwintering areas have been identified for a number of locations in the FMPs along the southern portion of the local and regional study areas for Timiskaming, Spanish and Pineland forests (MNR, 2010a; 2010b; 2010c; 2013a; 2013b; 2013c) with concentrations identified south of Mattagami Nation Reserve along several small watercourses and Mattagami Lake as well as to the east of the railroad corridor running south from Gogama (see Figure 4). These overwintering areas largely correspond with moderate to moderate-high potential Moose carrying capacities during dormant season (see Figure 6); where higher densities of Moose

were simulated to occur adjacent to Mattagami Reserve, south and north along Mattagami Lake and directly adjacent to the railroad corridor in winter. In the northern part of the study area, a large area adjacent to Mattagami Lake, adjacent and north of Kenogamissi Lake has also been identified as an area capable of supporting higher densities of Moose in winter (see Figure 6).

Moose aquatic feeding areas have been identified for a number of locations in the FMPs for Timiskaming, Spanish, Pineland, Abitibi and Romeo-Malette forests (MNR, 2010b; 2010c; 2011a, 2011b) with concentrations identified east and south-east of Mattagami First Nation Reserve along small watercourses east and west of the railroad corridor running south from Gogama and east of Kenogamissi Lake (see Figure 4). Moose aquatic feeding areas are generally found in cool water lakes, along medium-sized and shallow rivers. Overall the simulation results reveal the highest possible aquatic feeding area carrying capacities for Moose in several areas (see Figure 5), a pattern not observed for dormant season model results (see Figure 6). The potential for moderate to high Moose aquatic carrying capacities occur east and southeast of Mattagami First Nation Reserve, east of the railroad corridor and east of Kenogamissi Lake (see Figure 5). Simulated results also reveal the potential for higher aquatic carrying capacities north of Mattagami First Nation Reserve and east of Mattagami Lake as well as southeast of Timmins (see Figure 5).

The effect of the direct habitat loss from the removal of vegetation along a right-of-way (ROW) is minor relative to the indirect effects, including alteration of predator - prey dynamics, influx of competition and disease and increased mortality by humans due to ease of access. The potential effects of fragmentation are greatest where the landscape is largely untouched; as the Shining Tree TLA is using an existing ROW the increase in to landscape fragmentation is minimal.

Clearing of forest in this area will total 679.7 ha; of these, 267.7 ha will be coniferous forest, 271.1 ha will be deciduous/mixed forest, and 12.4 ha will be Jack Pine regenerating forest. Open wetland communities, such as marshes and fens as well as open water will be spanned by the Project activities and direct vegetation removal in these areas is not expected.

The Shining Tree TLA is utilizing an existing ROW for the entire length of the alignment, minimizing additional landscape fragmentation effects and habitat disturbance. The existing ROW is 36 m in width and will be expanded by 45 m for a total corridor width of 81 m. Loss of terrestrial and wetland habitats and/or portions of associated key habitat areas for Moose including aquatic feeding and over wintering areas is not expected to result in any direct mortalities of Moose. The 45 m expansion directly effects a small number of Moose aquatic feeding areas as well as Moose overwintering habitat identified from the FMPs (see Figure 4). The expansion also directly effects 131.8 ha of area identified with the potential to sustain high Moose aquatic carrying capacities (see Figure 5).

There are no potential high carry capacity zones identified for dormant season Moose carrying capacities along the Shining Tree TLA (see Figure 6); however potential for 205.5 ha of moderate-high carrying capacities was simulated to occur (see Figure 6). Winter and spring 2013 aerial surveys of this alignment revealed that several Moose were present in the FMP identified over wintering areas south of Mattagami First Nations Reserve along Mattagami Lake (see Figure 4) as well as the moderate – high carrying capacities zones identified in the simulated Moose dormant season carry capacity results (see Figure 6), suggesting congruency between model and field based distribution estimates and potential core use areas. These winter or dormant season areas are currently within and adjacent to the existing ROW and Moose are still using them; early successional habitat created by the ROW development appears to be of equal value to Moose compared to the forest habitat prior to development. After construction, Moose habitat may become even more enhanced due to the presence of suitable forage species. Additionally suitable seasonal Moose habitats are relatively evenly distributed throughout the local and regional study areas (see Figures 4 to 6) and Moose will be able to use these areas if they are displaced from the ROW during expansion.

The main effects associated with the construction and expansion of the ROWs are the potential for increased hunting and/or predation which could reduce local Moose populations (Richard and Doucet, 2003). The potential for increased hunting may only occur in a fraction of ROW development, contingent on the increased hunter access from the new 5 km of access roads proposed. Most studies reveal wolves utilize linear corridors for access to prey (Thomas, 1995; James and Stuart-Smith, 2000; Courbin et al., 2009), with differing preferences for line-type as well as season, wolves used the corridors more frequency in the snow-free seasons (Latham et al., 2011). At least one study did not document an increase in wolf use (Davis et al., 2010). Increased predation efficiency from wolves could occur as early as the construction phase of the Project, as Project activities will likely result in long lengths of snow packed areas following the intensive clearing and construction activities, providing immediate opportunities for enhanced predator movement. Changes in predation rates are expected to only last the life of the Project and are expected to be reversible upon Project decommissioning.

There is limited evidence of direct or indirect effects of noise on Moose (AMEC, 2005). Studies have demonstrated that Moose tend to avoid disturbed areas that are also associated with some level of noise such as roads (Horesji, 1979; Rolley and Keith, 1980; Lynch and Morgantini, 1984; Rudd and Irwin, 1985; Singer and Beattie, 1986; Jalkotzy et al., 1997). One study found Moose reacted stronger to sounds that could be identified as human over sounds that could be recognized as mechanical (Anderson et al., 1996). Heart rates also increase in Moose exposed to mechanical generated from equipment such as snowmobiles, planes, helicopters and motorcycles (Anderson et al., 1996). Therefore, it can be expected that Moose avoid areas with mechanical and human related noises as the TLA is being constructed. These noise effects will be temporary, subsiding once the TLA has been constructed.

Mitigation strategies for limiting adverse effects to Moose occurring within the local and regional study areas:

- development of a compact TLA to reduce overall habitat loss and to limit the potential adverse effects related to interference with wildlife of movement and sound effects, to the extent practicable;
- remove TLA infrastructure in the late fall to early winter to avoid sensitive late wintering period for Moose and maintain existing vegetation ground cover to the extent practicable;
- utilize existing infrastructure for access and avoid constructing new roads and other corridors where other alternatives exist;
- construction crews will be advised not to interfere or harass wildlife. No hunting by construction crews will be allowed.
- enforcement of speed limits along proposed access roads to reduce the potential for collisions with wildlife. Signs warning drivers of the possibility of wildlife encounters will be posted in areas of high wildlife activity;
- inclusion of wildlife awareness information into regular safety and environmental inductions. Workers and contractors will be made aware of seasonal changes in local large mammal behaviour or presence.

Late winter is a stressful time for Moose; as such tree clearing in the vicinity of known over wintering areas (upland coniferous forest with dense cover) should generally be undertaken from August 1 to January 1 to avoid disrupting any individuals during this time (and to avoid the breeding bird window).

3.1.3 Furbearers – Wolves

3.1.3.1 Relevant Background Information

In 2005, Ontario announced the strategy for wolf conservation to ensure ecologically sustainable wolf populations (MNR, 2005). Ontario is home to two wolf species, the Gray Wolf and the Eastern Wolf as well as hybrids between these two species. There are five tentatively identified ecological zones for the family Canidea in Ontario; compromised of a different mix of species, subspecies and hybrids of Gray Wolf, Eastern Wolf and Coyotes. Both the local and regional study areas are in the southern portion of Zone 2, which is comprised primarily of Gray Wolves, feeding primarily on Moose (with some use of deer; MNR, 2005). As the Project area is close to the boundary of Zone 4 where Eastern Wolves occur, there may be some Gray/Eastern hybrids present as well. It is estimated that there are 2,080 wolves in Zone 2 with densities approaching 7.5/1000 km^2. In Ontario, the Gray Wolf population is managed under the Fish and Wildlife Conservation Act (1997).

Site specific data on wolf distribution and abundance within the local and regional study areas was collected through winter aerial surveys for mammalian tracks and sightings, summer surveys of habitats and existing MNR data from FMPs and MNR documents (MNR, 2005).

Carnivores affect prey directly and indirectly and can exert influences that cascade through the trophic levels of an ecosystem (Estes et al., 2001; Miller et al., 2001; Reed 2003). Carnivores such as wolves can reduce prey abundance via predation (Schoener and Spiller, 1999). They can also change prey distribution as prey animals change their behaviour to avoid predation (Schmitz, 1998). Wolf kills are a consistent source of carrion to many scavengers, including Black Bears, Red Foxes, raptor and corvid species (USFWS et al., 2003), and therefore, they also exert influence over other carnivore species.

Flexible food habits, high annual productivity and dispersal capabilities enable wolves to respond to natural and human-induced disturbances, conferring a high degree of potential resiliency for this species (Weaver et al., 1996). Secluded denning and rendezvous sites in conjunction with an abundance of ungulates and relatively low levels of human activity are the general habitat requirements for wolves (Environment Canada, 2013; USFWS, 1987; 1994). However wolves are opportunistic predators and will also select smaller mammals for prey; Beavers in particular are an important secondary prey species.

Human activities associated with highways, roads and other frequently used linear corridors cause fragmentation of wolf ranges and result in the death of wolves through direct effects from vehicles, increased trapping and hunting (Paquet and Carbyn, 2003). In the Great Lakes areas, wolves avoided agricultural lands and deciduous forest and favour forests with at least some conifer component, such as mixed deciduous-conifer forest areas and forested wetlands (Mladenoff et al., 1997). In the Bow River Valley, Alberta, use of habitat types was related to human use levels and habitat potential. Displacement of wolves occurred when more than 10,000 people/month used an area, regardless of other habitat features. Wolf use patterns were altered at lower human use levels as well (Paquet and Carbyn, 2003).

Linear corridor development of features such as transmission or seismic lines can also facilitate new access for wolves into areas previously less accessible for hunting (Jalkotzy, 1997). Corridors increase the movement of wolves into previously safe places for prey species, decrease search times for prey, make prey escape more difficult and improve overall predation efficiency (Thomas, 1995; James and Stuart-Smith, 2000; Courbin et al., 2009). The amount of human activity and snow depths along linear corridors can influence the use of these features: i) remote ROWs with little human related activity are used more by wolves than those with higher levels of human activity (Stein, 2000), and ii) ROW use by wolves has been documented to be higher in snow free months.

3.1.3.2 Effects of Construction Phase on Furbearers – Wolves

Potential adverse effects to local wolf populations along the Shining Tree TLA local and regional study areas may include i) long-term displacement due to increased human disturbance, ii) short-term displacement due to increased human disturbance and iii) increased hunting and/or trapping by humans. Direct mortality is not an expected effect from the construction. Development of the TLA may positively affect local wolf populations depending on the level of human activity of the ROW through improved access and prey availability in the widened corridor. Increased mobility and visual sightlines for wolves along the expanded Shining Tree TLA footprint may lead to higher rates of predation on Moose in the local and regional study areas. Wolf tracks were observed within the existing Shining Tree ROW during the winter aerial survey, showing some level of use by wolves of this feature.

The Significant Wildlife Habitat (SWH) Ecoregion 3E Criterion Schedules (MNR, 2012) outline 13 wildlife habitats meeting the criteria for Specialized Habitat for Wildlife including wolf rendezvous sites. Rendezvous sites are used for resting and congregating, especially during summer and early fall and are often used by wolf packs during multiple years (USFWS 1994). They are typically open bogs, burns, clearcuts, beaver meadows and open forest. These habitats are present within the local and regional study areas and wolf tracks were encountered during winter aerial surveys confirming that this species is present the local study area (see Figure 8). The high level of human activity along much of the regional study area, forestry, cottages, roads and highways likely limits use of the most suitable habitat areas for wolves.

Clearing of forest in this area will total 679.7 ha; of these, 267.7 ha will be coniferous forest, 271.1 ha will be deciduous/mixed forest, and 12.4 ha will be Jack Pine regenerating forest. Open wetland communities, such as marshes and fens as well as open water will be spanned by the Project activities and direct vegetation removal in these areas is not expected. Typical densities for Gray Wolf, Black Bear and American Marten, as determined from the literature and the potential number of displaced individuals based on expected habitat losses during construction and operation of the Côté Gold Project are shown in Table 3-2.

Table 3-2: Potential Habitat Loss Effects on Wolf, Black Bear and American Marten

Species	Typical Density (# / km^2)	Potential Number of Displaced Individuals - Shining Tree TLA (# / km^2)	Reference
Wolf[1,2]	0.01	0.07	MNR (2005)
Black Bear[1]	0.2 – 0.4	1.4 – 2.7	MNR (2009)
American Marten[1]	0.4 – 1.2	2.7 – 8.1	Watt et al. (1996)

[1] In woodland habitat
[2] based on estimates from Zone 2 (MNR 2005).

The Shining Tree TLA is utilizing an existing ROW for the entire length of the alignment, minimizing cumulative landscape fragmentation effects and habitat disturbance. The existing ROW is 36 m wide and will be expanded by an additional 45 m for a total corridor width of 81 m. Loss of terrestrial and wetland habitats and/or portions of associated key habitat areas for wolves such as denning and/or rendezvous sites are not expected.

As an existing ROW may be utilized, local wolf populations are expected to have adapted to the local setting. Wolf tracks were observed in several locations along the existing ROW during the winter aerial surveys (see Figure 8), suggesting they are currently using this corridor to some extent. The expansion of the width of the current ROW by 45 m is not expected to have an appreciable effect on wolf behaviour. Widening the ROW and providing additional access routes could potentially improve hunting efficiency as ease of movement and greater visibility could result. This effect could be expected to last the life of the Project and can be reduced during Project closure by the re-generation of the expanded ROW back to an intact forest community.

Vegetation clearing activities may result in temporary displacement of local individuals due to sound and human activity disturbance. Longer term displacement of wolves could occur depending on the extent to which humans use the expanded ROW for hunting, trapping and recreational activities such as snowmobiling. However as the Shining Tree TLA is using an existing ROW it is not anticipated that the current levels of use by humans would increase appreciably and any temporary displacement of wolves during construction is not expected to last after construction is completed. Sound disturbance caused by vegetation clearing during construction has the potential to mask the sounds of nearby predators, thereby effecting defensive responses of prey and hunting success of wolves (Blickley and Patricelli, 2010). Noise may act to temporarily influence local wolf - prey dynamics in the local study area during construction.

There is some potential for vehicle collisions with wolves along the access roads. During construction, increased traffic may increase the risk of vehicle collisions with wolves and other furbearers. As the operation phase begins, the risk of collisions is likely to decrease.

Mitigation strategies for limiting adverse effects to wolves occurring within the local and regional study areas:

- development of a compact TLA to reduce overall habitat loss and to limit the potential adverse effects related to interference with wildlife of movement and sound effects, to the extent practicable;
- utilize existing infrastructure for access and avoid constructing new roads and other corridors where other alternatives exist;
- construction crews will be advised not to interfere or harass wildlife. No hunting by construction crews will be allowed. Disciplinary actions will be taken should either occur;

- enforcement of speed limits along proposed access roads to reduce the potential for collisions with wildlife. Signs warning drivers of the possibility of wildlife encounters will be posted in areas of high wildlife activity;
- inclusion of wildlife awareness information into regular safety and environmental inductions. Workers and contractors will be made aware of seasonal changes in local mammal behaviour or presence; and
- contractors will be required to handle food and food wastes in a responsible manner and to workers will be educated and policies enforced to ensure no feeding of wildlife.

3.1.4 Furbearers – American Marten

3.1.4.1 Relevant Background Information

Site specific data on American Marten distribution and abundance within the local and regional study areas was collected through winter aerial surveys for mammalian tracks and sightings, summer surveys of habitats and existing MNR data from FMPs where core marten areas have been identified for Romeo-Malette, Timiskaming, Pineland and Spanish FMPs.

Marten are an ecological indicator of forests featuring structural complexity and have been found to be most abundant in undisturbed forests with large core areas (Webb and Boyce, 2009; MNR, 1996). The species is associated with mature conifer dominated forests with high canopy closure that exhibit complex vertical and horizontal woody structure (MNR, 1996; Chapin et al., 1997). Accordingly this species is used by MNR as indicator in forest management planning (MNR, 1996).

Marten also exhibit large spatial requirements and narrow habitat use and are vulnerable to trapping (Webb and Boyce, 2009). Structures created by debris on the ground, cavities in dead and living trees, or fallen logs are generally selected as denning sites (Spencer et al., 1983; Martin and Barrett, 1983; Hargis and McCullough, 1984; Wynne and Sherburne, 1984; Ruggiero et al., 1998). Research identified the most important denning structures to be rock crevices and snags, followed by red squirrel midden and logs. The logs and snags utilized tend to be large in size and associated with late-successional forests (Ruggiero et al., 1998). Coarse woody debris is also necessary to facilitate marten foraging and access to prey under the snow in winter (Sherburne and Bissonette, 1994).

Forest fragmentation results in a decrease in abundance and distribution of marten (Hargis et al., 1999). Webb and Boyce (2009) found that areas where marten were frequently caught had less industrial disturbance than areas where marten were infrequently caught. Road access facilitates industrial and recreational activities, contributing to increased fragmentation which is negatively associated with trapping success (Webb and Boyce, 2009). However increased access to an area allows for trappers to distribute their traps more extensively, increasing trapping effort.

Females rearing kits may be more sensitive to changes in habitat quality than other cohorts of the population (Katnik et al., 1994). Hargis et al. (1999) found that though small mammal densities are higher in areas cut by forestry, this did not feature an associated increase in captured marten in the area. Marten have been documented to occasionally use riparian areas, meadows (Spencer et al., 1983) and forest edges (Simon, 1980). If an area has been clear-cut or burned, it is often left unused by marten for approximately 15 years (Koehler and Hornocker, 1977; Soutiere, 1979; Clark et al., 1987). Marten also have been documented to pass through forest openings up to 100 m, but generally do not hunt in them unless food or cover is available (Clark et al., 1987). Marten are known to be sensitive to disturbance including disturbance created via construction, clear cutting, or vehicular activity (Forsey and Baggs, 2001). Transmission lines and associated access routes may allow for an increase in off-highway and over-snow vehicles but there is no evidence that the presence of vehicles, or noise generated by vehicles, displace marten (Zielinski et al., 2008).

In northern Alberta, the movements of wildlife relative to a pipeline corridor were determined through snow tracking (Jalkotski et al., 1997) and marten track data demonstrated no consistent positive or negative responses to habitats adjacent to pipeline-related clearings, although the actual cleared areas were generally avoided. In Alberta, observations of marten tracks approaching the ROW demonstrated a relatively low crossing success rate (50%). However, based on the two years of track data in Alberta, there was no evidence that these effects resulted in reduced marten activity in the immediate vicinity of the ROW (Jalkotski et al., 1997).

Indirect mortality as a result of roads and other linear developments can occur. Most indirect mortality occurs as a result of human access along roads and other linear developments through increased hunting and trapping efforts. In boreal forest habitat in Ontario, resident marten in uncut forests had higher mean ages, were more productive and suffered lower trapping mortality than those in logged forests (Thompson, 1994).

3.1.4.2 Effects of Construction Phase on Furbearers – American Marten

Potential adverse effects to local marten populations along the Shining Tree TLA footprint may include i) direct loss of habitat due to vegetation clearing, ii) long-term displacement due to habitat loss, iii) short-term displacement due to disturbance during construction and iv) potential habitat abandonment along the edges of uncut forest and iv) increased trapping by humans; vi) increased predation. Direct mortality is not an expected effect from the construction of the Shining Tree TLA.

The SWH Ecoregion 3E Criterion Schedules (MNR, 2012) outline thirteen wildlife habitats meeting the criteria for Specialized Habitat for Wildlife including marten denning sites. Dens usually underground include, old beaver lodges, log jams, cavities in large trees or under large downed woody debris or hollow trees in mature forest communities. No denning sites were confirmed for marten during the field surveys, however given the core marten areas identified in the FMP are associated with mature forest tracts, it could be expected that these areas are also

associated with denning sites. Extensive searches for denning sites are not possible as they are very difficult to locate in a large study area without the use of telemetry.

Marten tracks were observed throughout the local and regional study areas within and adjacent to the existing ROW (see Figure 8) and 73.3 ha of potential 60 year core marten habitat identified from the Romeo – Malette, Timiskaming and Spanish FMPs within the Shining Tree TLA footprint. Under most of the management plans, these areas have been identified as suitable core habitat for 60 years through harvest deferrals (see Table 3-3 and Figure 8). These core areas have been identified in several areas within and adjacent to the existing ROW; east of Mattagami Lake, marten were observed with a core use area identified in the Romeo-Malette FMP (see Figure 8). The regional study area has 10,958 ha and the local study area has 6,311 ha of core marten habitat to use adjacent to the ROW.

Table 3-3: American Marten Core Habitat

Study Area	Area (ha)[1]				
	Romeo Malette Forest	Timiskaming Forest[2]	Pineland Forest	Spanish Forest	Abitibi Forest
Regional Study Area	3515.33	3796.00	0.00	3647.53	n/a
Local Study Area	1833.84	2026.39	0.00	2451.04	n/a
Shining Tree Footprint	22.98	8.11	0.00	42.23	n/a

[1] 60 years
[2] Best Marten habitat

Clearing of forest in this area will total 679.7 ha; of these, 267.7 ha will be coniferous forest, 271.1 ha will be deciduous/mixed forest, and 12.4 ha will be Jack Pine regenerating forest. Open wetland communities, such as marshes and fens as well as open water will be spanned by the Project activities and direct vegetation removal in these areas is not expected. The Shining Tree TLA is utilizing an existing ROW for the entire length of the alignment, minimizing cumulative landscape fragmentation effects and habitat disturbance. The existing ROW is 36 m in width and will be expanded by 45 m for a total corridor width of 81 m. Typical densities for Gray Wolf, Black Bear and marten, as determined from the literature and the potential number of displaced individuals based on expected habitat losses during construction and operation of the Côté Gold Project are shown in Table 3-2.

As an existing ROW may be used, local marten populations are expected to have adapted to the local setting. Marten tracks were observed in several locations along the existing ROW during the winter aerial surveys (see Figure 8), suggesting they are currently using portions of the edge of this existing corridor to some extent. The expansion of the width of the current ROW by 45 m is not expected to have an appreciable effect on behaviour. Marten have been documented to pass through forest openings up to 100 m, but generally do not hunt in them

unless food or cover is available. The expanded ROW may reduce use of these areas for foraging but will likely not impede local movement dynamics. This effect could be expected to last the life of the Project and can be reduced during Project closure by the re-generation of the expanded ROW back to an intact forest community.

Vegetation clearing activities may result in temporary displacement of local individuals due to noise and human disturbance. Longer term displacement of marten could occur depending on the extent to which humans use the expanded ROW for trapping. However as the Shining Tree TLA is using an existing ROW it is not anticipated that the current levels of use by humans would increase appreciably and any temporary displacement of marten during construction is not expected to last after construction is completed. Sound disturbance caused by vegetation clearing during construction also has the potential to mask the sounds of nearby predators or prey thereby impacting defensive responses and hunting success (Blickley and Patricelli, 2010). Noise may act to temporarily influence local predator - prey dynamics in the local study area during construction.

There is potential for vehicle collisions with marten along the access roads. During construction, increased traffic may increase the risk of vehicle collisions with large and small furbearers and other carnivores. As the operation phase begins, the risk of collisions is likely to decrease.

Mitigation strategies for limiting adverse effects to marten occurring within the local and regional study areas:

- development of a compact TLA to reduce overall habitat loss and to limit the potential adverse effects related to interference with wildlife of movement and sound effects, to the extent practicable;
- utilize existing infrastructure for access and avoid constructing new roads and other corridors where other alternatives exist;
- construction crews will be advised not to interfere or harass wildlife. No hunting by construction crews will be allowed. Disciplinary actions will be taken should either occur;
- enforcement of speed limits along proposed access roads to reduce the potential for collisions with wildlife. Signs warning drivers of the possibility of wildlife encounters will be posted in areas of high wildlife activity;
- inclusion of wildlife awareness information into regular safety and environmental inductions. Workers and contractors will be made aware of seasonal changes in local wildlife behaviour or presence; and
- contractors will be required to handle food and food wastes in a responsible manner and to workers will be educated and policies enforced to ensure no feeding of wildlife.

3.1.5 Furbearers – Black Bear

3.1.5.1 Relevant Background Information

Site specific data on Black Bear distribution and abundance within the local and regional study areas was collected through winter aerial surveys for mammalian tracks and sightings, summer surveys of habitats and existing MNR data from FMPs and MNR documents (MNR, 2005).

Habitat avoidance may be exhibited by Black Bears adjacent to roads and other developments because of the human activity concentrated on them. Previous studies report that Black Bears avoided areas within 100 m of any open road (Aune, 1994). The mean distance to open roads for Black Bears increased as the seasons progressed. Bears in Arkansas and Montana used habitats within 240 - 914 m of roads less than expected from spring to fall (Kasworm and Manley, 1990; Clark et al., 1993). Females often show stronger avoidance of roads than males. Conversely, a study in southern Alberta found no differences when comparing bear locations to roads and bear locations to random points without roads (Holcroft, 1986).

Trails and human activities may also affect some Black Bear use of an area (Kasworm, 1990; Clark et al., 1993; Jalkotzy et al., 1997). Busy roadways may serve as filters or barriers to movements by Black Bears as they are known to cross high-use roads less frequently than low-use roads. Several studies have reported that bears crossed primary roads less frequently than unpaved secondary roads (Beringer et al., 1990).

Black Bears in some areas appear to be relatively tolerant of industrial disturbance during the denning period. Oil development activities and busy snowmobile trails did not deter bears from denning in the vicinity (Tietje and Ruff, 1983; Manville, 1983). Black Bears can be displaced from their dens by disruptive intrusions. Manville (1987) reported that bears frequently fled their dens upon close approach attributed to human disturbance.

Construction of roads, pipelines, powerlines and other linear developments normally generates some degree of habitat disruption, at least temporarily. Increased access also contributes to increased shooting mortality, legal and illegal in populations. Increased access can increase vulnerability to hunting (Tietje and Ruff, 1983). Industrial activities including development of new roads, increased bear hunting and human habituation are typically thought to have greater negative effects on Black Bear populations than habitat alteration and loss.

Black Bears can also potentially benefit from corridor development; studies have reported that Black Bears benefited from early-successional vegetation induced by roadside cutting and pipeline construction (Manville, 1987). The effects of habitat enhancement, however, may be offset by increased mortality if access control is not invoked (Brody and Stone, 1987). Under certain conditions, road surfaces and pipeline rights-of-way may serve as travel corridors for Black Bears (Jalkotzy et al., 1997).

3.1.5.2 Effects of Construction Phase on Furbearers – Black Bear

Potential adverse effects to local Black Bear populations along the Shining Tree TLA local and regional study areas may include i) long-term displacement due to increased human disturbance, ii) short-term displacement due to increased human disturbance and iii) increased hunting and/or trapping by humans. Direct mortality is not an expected effect from the construction.

During the May and June 2013 ground surveys, Black Bears were commonly observed at roadsides near the regional study area and at points along the existing Shining Tree TLA. During the spring aerial survey, a Black Bear was seen sitting next to the entrance to a winter den which was located in an open coniferous forest with young deciduous saplings (see Figure 8). The sex of the bear was not confirmed and it cannot be determined whether the cubs were present. Nine clusters of bear "nests" were identified during aerial surveys and ranged from 1 to 15 nests per cluster (see Figure 8). These nests were abundant along the Shining Tree TLA. In the springtime, when food is limited, Black Bears will climb trees (typically poplar trees) to feed on leaf buds or seeds. As the bear breaks the twigs and branches to reach these leaf buds, the twigs collect around the bear to form a loose "nest" structure where they are sitting. These "nests" are easily distinguished from raptor stick nests which have a tighter formation and are cup-shaped.

Clearing of forest in this area will total 679.7 ha; of these, 267.7 ha will be coniferous forest, 271.1 ha will be deciduous/mixed forest, and 12.4 ha will be Jack Pine regenerating forest. Open wetland communities, such as marshes and fens as well as open water will be spanned by the Project activities and direct vegetation removal in these areas is not expected. Typical densities for Gray Wolf, Black Bear and marten, as determined from the literature and the potential number of displaced individuals based on expected habitat losses during construction and operation of the Côté Gold Project are shown in Table 3-2.

The Shining Tree TLA is utilizing an existing ROW for the entire length of the alignment, minimizing cumulative landscape fragmentation effects and habitat disturbance. The existing ROW is 36 m in width and will be expanded by 45 m for a total corridor width of 81 m. The recorded Black Bear den is located within the footprint (see Figure 8) and vegetation clearing may impact this feature. Bear nests are typically created in deciduous trees such as poplar and widening the ROW is not expected to impact the availability of these forage trees in the local or regional study areas.

As an existing ROW is being utilized, local Black Bear populations are expected to have adapted to the local setting. Bear nests were observed in several locations along the existing ROW during the winter aerial surveys (see Figure 8) suggesting they are currently using this corridor and the adjacent habitats to some extent. The expansion of the width of the current ROW by 45 m is not expected to have an appreciable effect behaviour. As hunting efforts are often concentrated in areas with good access, widening the ROW and providing additional

access routes could potentially result increased mortality within local Black Bear populations through increased hunting efforts in the local and regional study areas. This effect could be expected to last the life of the Project and can be reduced during Project closure by the re-generation of the expanded ROW back to an intact forest community.

Vegetation clearing activities may result in temporary displacement of local individuals due to sound and human activity disturbance. Longer term displacement of Black Bears could occur depending on the extent to which humans use the expanded ROW for hunting and trapping and/or recreational use. As the Shining Tree TLA is using an existing ROW it is not anticipated that the current levels of human activity would increase appreciably and any temporary displacement of Black Bears during construction is not expected to last after construction is completed. Sound disturbance caused by vegetation clearing during construction also has the potential to mask the sounds of nearby predators or prey thereby impacting defensive responses of prey and hunting success of predators (Blickley and Patricelli, 2010). Noise may act to temporarily influence local predator - prey dynamics in the local study area during construction.

There is potential for vehicle collisions along the access roads. During construction, increased traffic may increase the risk of vehicle collisions with wildlife. As the operation phase begins, the risk of collisions is likely to decrease.

Mitigation strategies for limiting adverse effects to Black Bears occurring within the local and regional study areas:

- development of a compact TLA to reduce overall habitat loss and to limit the potential adverse effects related to interference with wildlife of movement and sound effects, to the extent practicable;
- utilize existing infrastructure for access and avoid constructing new roads and other corridors where other alternatives exist;
- construction crews will be advised not to interfere or harass wildlife. No hunting by construction crews will be allowed. Disciplinary actions will be taken should either occur;
- enforcement of speed limits along proposed access roads to reduce the potential for collisions with wildlife. Signs warning drivers of the possibility of wildlife encounters will be posted in areas of high wildlife activity;
- inclusion of wildlife awareness information into regular safety and environmental inductions. Workers and contractors will be made aware of seasonal changes in large mammal behaviour or presence; and
- contractors will be required to handle food and food wastes in a responsible manner and to workers will be educated and policies enforced to ensure no feeding of wildlife.

3.1.6 Bats

Four species of bats were confirmed within the Shining Tree TLA local study area. These included two tree-roosting species (Hoary Bat and Red Bat) and two cavity-roosting species (Little Brown Myotis and Silver-haired Bat). Hoary Bat, Red Bat and Silver-haired Bat are migratory species and both Hoary Bat and Silver-haired Bat are expected to breed in the local study area. Little Brown Myotis occurs year-round in Ontario and use hibernacula during the winter. Little Brown Myotis is included on the Species at Risk in Ontario list as *Endangered* and is protected under the provincial Endangered Species Act. All other Ontario bat species are protected under the Fish and Wildlife Conservation Act.

The Ontario Little Brown Myotis population is at risk of decline due to their low reproduction rate, communal hibernating behaviour and the recent spread of a fatal fungus known as White Nose Syndrome (WNS). WNS is caused by a fungal pathogen (*Pseudogymnoascus destructans*) that has been devastating bat populations across eastern North America. It grows on the muzzle, ears and wings of hibernating bats and spreads quickly between individuals that hibernate in large groups. WNS causes bats to prematurely arouse from hibernation in the winter and subsequently leads to death from starvation due to excessive activity without a readily available food source.

As cavity roosters, Little Brown Myotis and Silver-haired Bat require a high density of mature (>80 years old), large diameter cavity trees for use as summer roost sites. Cavity-roosting bats may be directly affected during woodland clearing activities if roost trees are cleared while they are occupied by bats. Red Bat and Hoary Bat are foliage-roosting bats and prefer deciduous forest stands. Most species forage primarily at woodland edges or over wetlands. Development of the Shining Tree TLA will require the clearing of approximately of 271.1 ha of deciduous or mixed woodland habitat in the local study area. FRI data indicates that approximately 145 ha (53%) of woodland habitat to be removed is hardwood forest older than 80 years. However, maternity roost sampling in mature deciduous or mixed forest along the Shining Tree TLA did not locate any forest habitat with greater than 10 potential cavity roost trees per hectare (a MNR threshold to designate habitat as being significant). It was thus concluded that significant maternity roost habitat in proximity the Shining Tree TLA was absent or rare. Searches of old mine shafts and rock outcrops along the Shining Tree TLA did not reveal the presence of any potential hibernaculum locations.

During construction, IAMGOLD activities will create sound that may disturb local wildlife. Increased sound levels reduce the distance and area over which acoustical signals can be perceived by animals (Barber et al., 2009). Unlike other mammals found in the local study area, bats use echolocation to navigate their environment and to search for prey. Echolocation for bats consists of emitting pulses of high frequency sound and listening for returning echoes. Differences in timing and frequency between the pulses and their echoes provide bats with information about their surroundings (Naughton, 2012). Sound pulses used by Ontario bats for echolocation are generally above 18 kHz which is well above the frequency of traffic or

construction sound. Unlike some bat species occurring outside of Ontario, no Ontario bats are known to listen for the sounds of prey items. As a result, sound caused by construction activities is unlikely to cause adverse effects to bat navigation or hunting. Neonates (newborn bats) within a roost site produce isolation calls to communicate with their mother. It is not clear whether anthropogenic sound causes adverse effects on mother-offspring communication. Sound created during construction of the Shining Tree TLA will be limited to daytime hours as no construction is anticipated to occur during the night when bats are most active.

Research has shown that roads can provide a variety of risks to bats including mortality from collisions, habitat fragmentation and barriers to movement. Research by Bennett and Zurcher (2013) indicates that breaks in community structure of bat commuting routes cause bats to turn back and may prevent bats from accessing critical resources such as traditional feeding grounds. A significant increase in traffic along Highway 560 is not anticipated and few additional roads and anticipated to be required for access to construction areas as are present roads along the existing ROW.

Bats commonly feed at night in areas of high insect density such as along woodland edges and above wetlands. The Little Brown Myotis is known to hunt insects over waterbodies including wetlands. No wetland, waterbody, or watercourse removal for construction of the Shining Tree TLA is anticipated as these natural features will be spanned by the transmission line.

Mitigation measures that will be used to reduce potential adverse effects to bats will include the following:

- development of a compact site to reduce overall habitat loss and to limit potential adverse effects related to sound emissions, to the extent practicable; and
- enforcement of speed limits along proposed TLA access roads to reduce the potential adverse effects of increased vehicular traffic associated with construction.

Mitigation measures described in this section are expected to be effective for their intended purposes and in many instances can be further optimized through operations.

3.1.7 Migratory Birds

A total of 92 bird species were recorded in the Shining Tree TLA local study area (see Appendix I). A variety of avian communities are present along the proposed Shining Tree TLA footprint as a result of the different vegetation communities and habitats present (see Figure 3) though upland deciduous forest and coniferous forest cover most of the Shining Tree TLA local study area. Breeding bird point count data indicates that breeding bird diversity is relatively uniform along the Shining Tree TLA as the average diversity point count clusters was 41.1 species (minimum = 40, maximum = 43; see Table 3-4) when clusters accessed by helicopters were removed. This uniformity was also reflected in the average species recorded per count (see Table 3-5). As a result, no particular area along the proposed Shining Tree TLA is considered of

greater significance due to higher levels of avian diversity. Species diversity recorded during baseline investigations mirrored that of the Atlas of the Breeding Birds of Ontario results (Cadman et al., 2007) occurring near to the local study area (see Table 3-5). This indicates that bird habitat occurring within the local study area is consistent with habitat occurring elsewhere in the region and the strong diversity recorded in the area reflects the quality of available habitat both in the local study area and throughout the regional study area.

Table 3-4: Breeding Bird and PIF Diversity for Point Count Survey Clusters along the Shining Tree TLA

Region	Point Counts 1-14	Point Counts 17-29	Point Counts 30-43	Point Counts 44-58	Point Counts 59-69[1]	Point Counts 96-110	Point Counts 111-123[1]	Point Counts 125-135	Point Counts 139-153	Point Counts 154-168	Average
Total Species	41	41	40	42	26	40	36	42	43	40	39.5
Total PIF Species	11	12	11	13	10	13	10	12	17	14	12.6
Average Species per Count	10.7	12.4	14.7	11.3	8.63	12.7	10.1	12.6	12.1	13.9	12.4

[1]Survey stations were only accessible by helicopter. Surveys completed later in the morning and early afternoon due to fog which prevented flight during the early morning.
[2]Survey stations only surveyed once. Stations were added to raise coverage of Project Study Area.

Table 3-5: Relative Comparison of Bird Species Abundances Recorded along the Shining Tree TLA Point Counts (PC) with those Recorded in 10 km^2 Areas 17MN and 17MP as Reported in Atlas of the Breeding Birds of Ontario (OBBA) 2001-2005 (Cadman et al., 2007)

Species	Combined OBBA Data		
	Total PC Observed	% PC Observed	Abundance (Birds/PC)
White-throated Sparrow	551	64.8150	**1.4537**
Nashville Warbler	463	54.4764	**0.9483**
Red-eyed Vireo	360	42.3614	**0.6107**
Hermit Thrush	302	35.5300	**0.6035**
Magnolia Warbler	340	40.0021	**0.5741**
Ovenbird	298	35.0686	**0.5732**
Swainson's Thrush	252	29.6486	**0.4342**
Winter Wren	268	31.5250	**0.3764**
Yellow-rumped Warbler	237	27.8907	**0.3589**
Ruby-crowned Kinglet	189	22.2371	**0.2859**
Chestnut-sided Warbler	135	15.8821	**0.2153**
Golden-crowned Kinglet	152	17.8814	**0.2142**
American Robin	107	12.5836	**0.1740**
Yellow-bellied Flycatcher	127	14.9486	**0.1624**
Least Flycatcher	85	10.0043	**0.1471**
Common Yellowthroat	88	10.3471	**0.1423**
Alder Flycatcher	90	10.5793	**0.1399**
Yellow-bellied Sapsucker	97	11.4107	**0.1377**
Veery	74	8.7021	**0.1294**
Black-throated Blue Warbler	91	10.7114	**0.1212**
Dark-eyed Junco	77	9.0636	**0.1177**
Mourning Warbler	69	8.1136	**0.1129**
Black-capped Chickadee	66	7.7629	**0.1106**
Common Raven	74	8.7100	**0.1059**

Species	Shining Tree TLA		
	Total PC Observed	% PC Observed	Abundance (Birds/PC)
Ovenbird	100	70.42	**1.155**
Nashville Warbler	119	83.80	**1.095**
Red-eyed Vireo	90	63.38	**0.739**
White-throated Sparrow	90	63.38	**0.722**
Magnolia Warbler	95	66.90	**0.704**
Yellow-rumped Warbler	79	55.63	**0.553**
Ruby-crowned Kinglet	75	52.82	**0.496**
Hermit Thrush	60	42.25	**0.356**
Winter Wren	65	45.77	**0.342**
Swainson's Thrush	63	44.37	**0.331**
Black-throated Blue Warbler	43	30.28	**0.264**
Northern Parula	42	29.58	**0.246**
Yellow-bellied Sapsucker	43	30.28	**0.222**
Red-breasted Nuthatch	47	33.10	**0.208**
Ruffed Grouse	46	32.39	**0.204**
Yellow-bellied Flycatcher	33	23.24	**0.204**
Golden-crowned Kinglet	39	27.46	**0.176**
Common Raven	32	22.54	**0.176**
Black-capped Chickadee	37	26.06	**0.173**
Blackburnian Warbler	30	21.13	**0.151**
Black-throated Green Warbler	19	13.38	**0.134**
Blue-headed Vireo	29	20.42	**0.130**
Blue Jay	24	16.90	**0.106**
Least Flycatcher	16	11.27	**0.106**

Species	Combined OBBA Data		
	Total PC Observed	% PC Observed	Abundance (Birds/PC)
Cedar Waxwing	42	4.9429	**0.1059**
Tennessee Warbler	64	7.5279	**0.1023**
American Redstart	75	8.8243	**0.1000**
Chipping Sparrow	67	7.8836	**0.1000**
Blackburnian Warbler	74	8.7071	**0.0989**
Blue Jay	60	7.0614	**0.0942**
Red-breasted Nuthatch	64	7.5271	**0.0918**
Northern Flicker	65	7.6443	**0.0917**
American Crow	56	6.5886	**0.0847**
Black-throated Green Warbler	55	6.4743	**0.0835**
Bay-breasted Warbler	63	7.4114	**0.0823**
Common Loon	64	7.5300	**0.0812**
Blue-headed Vireo	63	7.4114	**0.0789**
Lincoln's Sparrow	52	6.1143	**0.0717**
Black-and-white Warbler	53	6.2336	**0.0694**
Swamp Sparrow	37	4.3529	**0.0636**
Gray Jay	32	3.7679	**0.0564**
Northern Parula	31	3.6457	**0.0459**
Hairy Woodpecker	28	3.2921	**0.0389**
Evening Grosbeak	23	2.7029	**0.0389**
Ruffed Grouse	31	3.6514	**0.0365**
White-winged Crossbill	22	2.5879	**0.0364**
Brown Creeper	26	3.0621	**0.0341**
Pileated Woodpecker	26	3.0607	**0.0330**
Song Sparrow	21	2.4693	**0.0306**
Boreal Chickadee	19	2.2393	**0.0282**
Philadelphia Vireo	20	2.3493	**0.0247**

Species	Shining Tree TLA		
	Total PC Observed	% PC Observed	Abundance (Birds/PC)
Veery	16	11.27	**0.106**
Downy Woodpecker	20	14.08	**0.077**
Common Yellowthroat	12	8.45	**0.077**
Black-and-white Warbler	18	12.68	**0.074**
American Crow	17	11.97	**0.060**
Tennessee Warbler	11	7.75	**0.060**
Chestnut-sided Warbler	7	4.93	**0.056**
Bay-breasted Warbler	10	7.04	**0.056**
Brown Creeper	14	9.86	**0.053**
American Redstart	12	8.45	**0.049**
American Robin	9	6.34	**0.049**
Swamp Sparrow	8	5.63	**0.049**
Alder Flycatcher	9	6.34	**0.046**
Mourning Warbler	11	7.75	**0.039**
Common Loon	10	7.04	**0.039**
Pileated Woodpecker	10	7.04	**0.039**
Northern Flicker	8	5.63	**0.032**
Canada Goose	8	5.63	**0.032**
Purple Finch	7	4.93	**0.028**
Dark-eyed Junco	6	4.23	**0.028**
Northern Waterthrush	5	3.52	**0.028**
Canada Warbler	7	4.93	**0.025**
Boreal Chickadee	5	3.52	**0.021**
Palm Warbler	5	3.52	**0.021**
Gray Jay	3	2.11	**0.018**
Rose-breasted Grosbeak	5	3.52	**0.018**
Hairy Woodpecker	4	2.82	**0.014**

Species	Combined OBBA Data		
	Total PC Observed	% PC Observed	Abundance (Birds/PC)
Northern Waterthrush	18	2.1179	**0.0235**
Pine Siskin	17	2.0000	**0.0223**
Common Snipe	13	1.5264	**0.0200**
Canada Warbler	16	1.8857	**0.0200**
Wilson's Warbler	14	1.6486	**0.0188**
Purple Finch	16	1.8821	**.0188**
Downy Woodpecker	15	1.7657	**0.0188**
Tree Swallow	7	0.8271	**0.0141**
Red-winged Blackbird	7	0.8250	**0.0141**
Cape May Warbler	11	1.2964	**0.0130**
Bonaparte's Gull	7	0.8214	**0.0129**
Canada Goose	2	0.2379	**0.0106**
Scarlet Tanager	6	0.7071	**0.0095**
Olive-sided Flycatcher	7	0.8271	**0.0083**
Belted Kingfisher	7	0.8229	**0.0082**
Savannah Sparrow	2	0.2357	**0.0082**
Rose-breasted Grosbeak	5	0.5871	**0.0071**
Broad-winged Hawk	5	0.5914	**0.0059**
Solitary Sandpiper	3	0.3536	**0.0059**
American Bittern	5	0.5893	**0.0059**
Ring-necked Duck	3	0.3514	**0.0047**
American Kestrel	4	0.4693	**0.0047**
Common Merganser	2	0.2336	**0.0036**
Eastern Wood-Pewee	3	0.3536	**0.0035**
Warbling Vireo	2	0.2379	**0.0035**
Killdeer	2	0.2379	**0.0024**
Great Horned Owl	1	0.1157	**0.0024**

Species	Shining Tree TLA		
	Total PC Observed	% PC Observed	Abundance (Birds/PC)
Broad-winged Hawk	4	2.82	**0.014**
Evening Grosbeak	3	2.11	**0.014**
Chipping Sparrow	3	2.11	**0.014**
Philadelphia Vireo	4	2.82	**0.014**
Common Grackle	1	0.70	**0.014**
Woodpecker sp	2	1.41	**0.011**
Cape May Warbler	3	2.11	**0.011**
Bufflehead	1	0.70	**0.011**
Mallard	1	0.70	**0.011**
Red Crossbill	1	0.70	**0.011**
Cedar Waxwing	2	1.41	**0.007**
Blackpoll Warbler	2	1.41	**0.007**
Hooded Merganser	1	0.70	**0.007**
Spotted Sandpiper	1	0.70	**0.007**
Belted Kingfisher	1	0.70	**0.004**
Lincoln's Sparrow	1	0.70	**0.004**
Black-backed Woodpecker	1	0.70	**0.004**
American Goldfinch	1	0.70	**0.004**
American Kestrel	1	0.70	**0.004**
Barred Owl	1	0.70	**0.004**
Orange-crowned Warbler	1	0.70	**0.004**
Pine Grosbeak	1	0.70	**0.004**
Ring-billed Gull	1	0.70	**0.004**
Scarlet Tanager	1	0.70	**0.004**
Wilson's Warbler	1	0.70	**0.004**
Yellow Warbler	1	0.70	**0.004**

Species	Combined OBBA Data		
	Total PC Observed	% PC Observed	Abundance (Birds/PC)
Ruby-throated Hummingbird	2	0.2379	**0.0024**
Yellow Warbler	2	0.2379	**0.0024**
Pine Warbler	1	0.1157	**0.0024**
Common Grackle	1	0.1157	**0.0024**
Common Goldeneye	2	0.2357	**0.0024**
Bald Eagle	1	0.1179	**0.0024**
Black-backed Woodpecker	2	0.2357	**0.0024**
Black-billed Cuckoo	2	0.2336	**0.0023**
Mallard	1	0.1179	**0.0012**
Sharp-shinned Hawk	1	0.1179	**0.0012**
Merlin	1	0.1179	**0.0012**
Sora	1	0.1179	**0.0012**
Eastern Kingbird	1	0.1179	**0.0012**
Eastern Bluebird	1	0.1179	**0.0012**
Wood Thrush	1	0.1179	**0.0012**
Brown Thrasher	1	0.1179	**0.0012**
European Starling	1	0.1179	**0.0012**
Palm Warbler	1	0.1179	**0.0012**
Indigo Bunting	1	0.1179	**0.0012**
Rusty Blackbird	1	0.1179	**0.0012**
Blue-winged Teal	1	0.1157	**0.0012**
Spruce Grouse	1	0.1157	**0.0012**
Turkey Vulture	1	0.1157	**0.0012**
Sandhill Crane	1	0.1157	**0.0012**
Herring Gull	1	0.1157	**0.0012**
Common Nighthawk	1	0.1157	**0.0012**
Eastern Phoebe	1	0.1157	**0.0012**

Species	Shining Tree TLA		
	Total PC Observed	% PC Observed	Abundance (Birds/PC)

Species	Combined OBBA Data		
	Total PC Observed	% PC Observed	Abundance (Birds/PC)
Great Crested Flycatcher	1	0.1157	**0.0012**

Species	Shining Tree TLA		
	Total PC Observed	% PC Observed	Abundance (Birds/PC)

Partners In Flight (PIF) is an initiative aiming to maintain the health of landbird populations and their habitats. In Ontario, PIF is being led by Ontario Region Canadian Wildlife Service and MNR in partnership with Bird Studies Canada. PIF has published the Ontario Landbird Conservation Plan (OLCP) for three ecoregions in Ontario which has identified priority bird species for conservation efforts in these Bird Conservation Regions (BCR). The Shining Tree study area occurs at the Boreal Hardwood Transition (BCR 12). Field surveys conducted in 2013 recorded 30 priority species from BCR 12 (see Appendix I). Amongst clusters of breeding bird point count survey points, an average of 12.6 PIF species was recorded per cluster (see Table 3-4). PIF diversity between clusters varied between 10 and 17 species with the greatest diversity occurring at the southern most extent of the alignment (see Table 3-4). If the cluster of maximum diversity (17 species) is excluded from the analysis, PIF diversity along the Shining Tree TLA was fairly uniform varying between 10 and 14 species (see Table 3-4).

Potential adverse effects to migratory bird communities along the Shining Tree TLA footprint may include i) direct loss of habitat due to vegetation clearing, ii) long-term displacement due to habitat loss, iii) short-term displacement due to disturbance during construction and iv) potential habitat abandonment along the edges of uncut forest, particularly by area-sensitive woodland breeding birds that will avoid edge. Direct mortality and decreased reproductive output is not an expected effect from the construction of the Shining Tree TLA and is discussed further below.

The overall amount of terrestrial habitat lost along the Shining Tree TLA (158.6 km long, 45 m wide; with only 5 km of new access roads proposed) due to new clearing of vegetation is 679.7 ha; of these, 267.7 ha will be coniferous forest, 271.1 ha will be deciduous/mixed forest, and 12.4 ha will be Jack Pine regenerating forest. Open wetland communities, such as marshes and fens as well as open water will be spanned by the Project activities and direct vegetation removal in these areas is not expected. The loss of this terrestrial habitat is not expected to result in any direct mortalities of birds, nor in a decrease in reproductive effort of any bird species if clearing takes place outside of the breeding bird season (outside of April 1 – July 31) and if proper mitigation measures are implemented (discussed further below). However, vegetation removal will result in direct habitat loss causing displacement of individuals when they return to breed in the spring. Estimates of how many birds will be displaced due to the loss of various terrestrial habitat types are presented in Table 3-6.

Table 3-6: Potential Displacement of Breeding Bird Species Along the Shining Tree TLA Due to Habitat Loss

Common Name	AMEC 2013									GOLDER 2012					Overall Total
	Spruce (168 ha)	White Birch (102 ha)	Trembling Aspen (139 ha)	Jack Pine (110 ha)	Cedar (13 ha)	Wetlands (28 ha)	Clearcut (8 ha)	Larch (1.3 ha)	AMEC* Total	Coniferous	Deciduous /Mixed	Jack Pine Regeneration	Wetland	Golder Total	
Nashville Warbler	55.69	15.48	17.60	45.63	4.87	11.03	1.44	1.25	**146.09**	90.32	10.00	9.29	3.36	119.79	**265.88**
Yellow-rumped Warbler	47.56	11.30	8.87	21.05	3.65	2.00	0.72	0.83	**90.33**	24.92	4.67	1.86	1.03	39.08	**129.41**
Magnolia Warbler	34.46	18.53	21.20	10.47	2.43	8.02	2.16	1.25	**102.60**	10.38	4.67	0.50	0.00	22.15	**124.75**
Red-eyed Vireo	6.61	27.80	38.79	7.05	0.00	0.00	0.00	1.25	**87.54**	10.38	5.34	1.36	0.00	36.28	**123.82**
Ovenbird	6.52	19.55	36.99	19.29	0.00	1.00	0.72	0.00	**80.29**	5.19	7.71	0.50	0.00	20.13	**100.42**
Golden-crowned Kinglet	27.83	10.29	3.46	8.82	1.22	3.01	0.00	0.00	**52.97**	24.92	3.65	0.50	0.00	35.63	**88.60**
Ruby-crowned Kinglet	26.20	5.19	7.07	1.76	0.00	5.01	0.72	1.66	**49.07**	35.30	1.27	0.50	0.65	37.76	**86.83**
White-throated Sparrow	13.09	4.07	5.26	8.82	2.43	8.03	2.16	0.42	**47.95**	10.38	3.05	0.99	0.00	14.54	**62.49**
Brown Creeper	1.66	1.02	3.46	5.29	1.22	0.00	0.00	0.00	**11.15**	40.49	1.78	0.50	0.00	42.83	**53.98**
Blackburnian Warbler	4.86	9.27	12.33	1.76	0.00	1.00	0.72	0.00	**32.90**	10.38	1.87	0.00	0.00	18.75	**51.65**
Yellow-bellied Flycatcher	14.70	0.00	3.46	1.76	4.87	2.00	0.72	0.42	**27.32**	19.73	1.27	1.86	0.65	23.55	**50.88**
Red-breasted Nuthatch	4.95	4.07	7.07	1.76	1.22	0.00	0.72	0.42	**20.63**	19.73	0.00	0.00	0.00	19.73	**40.36**
Northern Parula	3.24	6.21	17.60	0.00	0.00	1.00	0.00	0.00	**27.32**	10.38	1.27	0.00	0.00	11.70	**39.02**
Black-throated Blue Warbler	3.24	11.30	19.40	3.53	0.00	0.00	0.00	0.00	**36.80**	0.00	1.78	0.00	0.00	1.85	**38.65**
Winter Wren	6.61	6.21	7.07	1.76	0.00	1.00	0.00	0.00	**21.75**	15.57	0.51	0.00	0.00	16.10	**37.85**
Black-capped Chickadee	9.84	8.25	8.87	7.05	1.22	2.00	0.00	0.00	**35.69**	0.00	0.51	0.00	0.00	0.53	**36.21**
Blue-headed Vireo	4.89	3.06	5.26	3.53	2.43	1.00	0.00	0.42	**21.75**	5.19	1.27	0.00	0.00	6.51	**28.26**
Yellow-bellied Sapsucker	0.00	6.21	19.40	0.00	0.00	0.00	0.00	0.42	**26.21**	0.00	0.11	0.00	0.00	1.23	**27.43**
Black-and-white Warbler	4.95	4.07	1.80	0.00	0.00	0.00	0.00	0.00	**11.15**	5.19	2.89	0.50	0.00	15.11	**26.26**
Swainson's Thrush	6.61	2.04	3.46	1.76	0.00	1.00	0.00	0.00	**15.06**	5.19	2.29	0.50	0.33	8.39	**23.44**
Common Yellowthroat	0.00	1.02	0.00	0.00	0.00	5.01	1.44	0.00	**11.15**	5.19	1.27	1.86	2.01	10.37	**21.53**
Alder Flycatcher	1.62	0.00	0.00	0.00	0.00	5.01	0.00	0.00	**8.36**	0.00	0.60	3.22	1.03	11.30	**19.66**
Chestnut-sided Warbler	0.00	0.00	5.26	0.00	0.00	0.00	1.44	0.00	**6.69**	0.00	4.06	6.07	0.65	10.95	**17.64**
American Redstart	0.00	2.04	5.26	1.76	0.00	0.00	0.00	0.00	**8.36**	5.19	3.05	0.00	0.00	8.36	**16.72**

Common Name	AMEC 2013									GOLDER 2012					Overall Total
	Spruce (168 ha)	White Birch (102 ha)	Trembling Aspen (139 ha)	Jack Pine (110 ha)	Cedar (13 ha)	Wetlands (28 ha)	Clearcut (8 ha)	Larch (1.3 ha)	AMEC* Total	Coniferous	Deciduous /Mixed	Jack Pine Regeneration	Wetland	Golder Total	
Least Flycatcher	0.00	7.23	3.46	0.00	0.00	0.00	0.00	0.42	**13.38**	0.00	1.27	0.50	0.00	1.82	**15.20**
Mourning Warbler	4.95	1.02	0.00	1.76	0.00	0.00	0.72	0.00	**9.48**	0.00	1.27	3.22	0.33	4.87	**14.35**
Cedar Waxwing	0.00	0.00	0.00	0.00	0.00	0.00	0.00	0.00	**0.00**	10.38	0.51	2.35	0.33	13.59	**13.59**
Downy Woodpecker	0.00	4.07	7.07	1.76	1.22	0.00	0.00	0.00	**13.38**	0.00	0.00	0.00	0.00	0.00	**13.38**
Hermit Thrush	4.86	2.04	1.80	3.53	0.00	0.00	0.00	0.42	**12.27**	0.00	0.00	0.00	0.00	0.00	**12.27**
Veery	0.00	5.19	5.26	0.00	0.00	0.00	0.00	0.00	**11.15**	0.00	0.00	0.00	0.00	0.00	**11.15**
Ruffed Grouse	3.24	1.02	1.80	1.76	0.00	1.00	0.00	0.00	**9.48**	0.00	0.51	0.00	0.00	0.53	**10.01**
Bay-breasted Warbler	1.62	1.02	7.07	0.00	0.00	1.00	0.00	0.00	**9.48**	0.00	0.00	0.00	0.00	0.00	**9.48**
Swamp Sparrow	4.89	0.00	0.00	0.00	0.00	3.01	0.00	0.00	**8.36**	0.00	0.00	0.00	0.33	0.33	**8.69**
American Robin	1.66	2.04	0.00	1.76	0.00	0.00	0.72	0.00	**6.69**	0.00	0.00	0.50	0.00	0.50	**7.19**
Boreal Chickadee	8.23	0.00	0.00	0.00	0.00	0.00	0.00	0.00	**6.69**	0.00	0.00	0.00	0.00	0.00	**6.69**
Pine siskin	0.00	0.00	0.00	0.00	0.00	0.00	0.00	0.00	**0.00**	5.19	0.51	0.50	0.33	6.54	**6.54**
Pine Warbler	0.00	0.00	0.00	0.00	0.00	0.00	0.00	0.00	**0.00**	5.19	1.27	0.00	0.00	6.51	**6.51**
Black-throated Green Warbler	0.00	4.07	0.00	0.00	0.00	0.00	0.00	0.00	**5.58**	0.00	0.51	0.00	0.00	0.53	**6.10**
Tennessee Warbler	3.24	0.00	0.00	0.00	0.00	2.00	0.00	0.00	**5.58**	0.00	0.00	0.00	0.00	0.00	**5.58**
Canada Warbler	0.00	1.02	1.80	0.00	0.00	0.00	0.00	0.00	**2.79**	0.00	1.78	0.50	0.33	2.67	**5.46**
Evening Grosbeak	0.00	0.00	0.00	0.00	0.00	0.00	0.00	0.00	**0.00**	5.19	0.00	0.00	0.00	5.19	**5.19**
Northern Flicker	0.00	0.00	0.00	0.00	0.00	0.00	0.00	0.00	**0.00**	5.19	0.00	0.00	0.00	5.19	**5.19**
Northern Waterthrush	0.00	0.00	0.00	0.00	0.00	2.00	0.00	0.00	**2.79**	0.00	1.27	0.00	0.00	1.32	**4.11**
Blue Jay	1.66	1.02	1.80	0.00	0.00	0.00	0.00	0.00	**3.90**	0.00	0.00	0.00	0.00	0.00	**3.90**
Hairy Woodpecker	1.66	1.02	0.00	0.00	0.00	0.00	0.00	0.00	**2.79**	0.00	0.51	0.00	0.00	0.53	**3.32**
Chipping Sparrow	0.00	0.00	0.00	3.53	0.00	0.00	0.00	0.00	**2.79**	0.00	0.00	0.50	0.00	0.50	**3.28**
Yellow Warbler	0.00	0.00	0.00	0.00	0.00	0.00	0.00	0.00	**0.00**	0.00	0.51	0.99	0.00	1.52	**1.52**
American Crow	1.62	0.00	0.00	0.00	0.00	0.00	0.00	0.00	**1.12**	0.00	0.00	0.00	0.00	0.00	**1.12**
Pileated Woodpecker	0.00	0.00	0.00	0.00	0.00	0.00	0.00	0.00	**0.00**	0.00	0.51	0.00	0.00	0.53	**0.53**

Common Name	AMEC 2013									GOLDER 2012					Overall Total
	Spruce (168 ha)	White Birch (102 ha)	Trembling Aspen (139 ha)	Jack Pine (110 ha)	Cedar (13 ha)	Wetlands (28 ha)	Clearcut (8 ha)	Larch (1.3 ha)	AMEC* Total	Coniferous	Deciduous /Mixed	Jack Pine Regeneration	Wetland	Golder Total	
Song Sparrow	0.00	0.00	0.00	0.00	0.00	0.00	0.00	0.00	**0.00**	0.00	0.51	0.00	0.00	0.53	**0.53**
Marsh Wren	0.00	0.00	0.00	0.00	0.00	0.00	0.00	0.00	**0.00**	0.00	0.00	0.00	0.33	0.33	**0.33**
White-winged Crossbill	0.00	0.00	0.00	0.00	0.00	0.00	0.00	0.00	**0.00**	0.00	0.00	0.00	0.33	0.33	**0.33**
Total	**322.74**	**207.74**	**289.01**	**166.98**	**26.78**	**66.17**	**14.42**	**9.15**	**1106.82**	**385.16**	**75.80**	**39.03**	**11.98**	**586.42**	**1693.24**

*AMEC Total was calculated using all point count station data collected and is not a direct sum of the eight habitat types with calculated densities. Certain point count stations could not be included due to discrepancies between ground-truthed habitat type and calculable area based on regional vegetation community data.

It is assumed that all waterbodies and wetlands will be fully spanned (clear spanned) and as such there will be no direct footprint of the TLA within watercourses or wetlands. Therefore, no aquatic or wetland habitat will be directly affected (lost) from the construction of the Shining Tree TLA. There is the potential for waterbodies, watercourses and wetlands located adjacent to Project activities to be indirectly affected through sedimentation during construction (during forest clearing). However, this can be minimized by implementing various mitigation measures discussed below.

Some species are not expected to be overly sensitive to human presence or temporary heavy equipment usage. Other species may be temporarily affected by noise effects and other disturbance related to construction activities. Construction activities may cause a local displacement of sensitive species but these species are likely to return after construction activities cease, if the habitat remains appropriate. As an existing ROW is present along the entire proposed Shining Tree TLA, most local species would be expected to have adapted to the local setting. Therefore, the expansion of the Shining Tree ROW by 45 m is not expected to have an appreciable effect on species diversity, density or behaviour along the TLA on completion of construction.

It is also expected that the current ROW is likely used by some species for nesting (Common Raven, raptors, open country ground nesters) and for foraging (Common Raven, American Crow, raptors, swallows, flycatchers and Eastern Whip-poor-will). During the construction phase which will mostly be confined to the winter months, some birds will become displaced but these individuals and/or species are likely to return to using the ROW once construction has ceased.

As the existing ROW is already present along almost the entire proposed Shining Tree TLA route and given the general abundance of all of the habitat and vegetation communities in the region, the fragmenting of habitat (and particularly forest habitat) is not expected to be of concern to migratory bird communities, individual species, or even individual animals. The more open terrain and increased edge may however pose a slightly increased risk to certain species from predators such as raptors and foxes; it may also offer increased foraging opportunities for some species (such as raptor species and Eastern Whip-poor-will).

The permanent displacement of some birds due to clearing activities will occur concurrently with the loss of those areas comprising their habitat. Wooded habitat and vegetation communities along the proposed TLA for example, will be replaced by herbaceous and shrub communities following construction. Woodland area sensitive breeding birds are diverse and abundant in the local study area with a total of 27 species recorded during the 2013 breeding bird surveys (see Appendix I).

Adverse effects to woodland area sensitive breeding bird populations within the local study area will largely be associated with direct habitat loss from forest clearing, potentially coupled with changes to habitat suitability related to the production of edge effects (such as changes in tree

cover, soil moisture, composition of vegetation and increased predation levels from predators that travel along linear corridors) and temporary sound and dust production during construction of the TLA. Sound and dust emissions will be greatest in areas of concentrated heavy equipment operation during vegetation clearing and TLA construction. Sound can cause adverse effects on birds in a variety of ways including masking important communication signals, loss of the ability to hear important behavioural triggers such as the songs of territorial males, calls of females, begging calls of nestlings, approaching predators, or the presence of prey items. As a result, long-term noise disturbance can decrease breeding success or bird density in a chronically noisy habitat. The production of noise during construction of the TLA is expected to be temporary and will take place during the winter months when migratory bird species are not present.

Most bird species will be able to avoid these effects by moving to adjacent areas of similar habitat and will not be affected appreciably by construction of the TLA. Further, as indicated above, linear corridors may provide habitat that is preferred by some species for nesting and foraging.

The removal of habitat due to clearing activities could also result in the potential loss of portions of avian Significant Wildlife Habitat (SWH). The MNR defines SWH as habitat that is ecologically important in terms of features, functions, representation or amount and habitat that contributes to the quality and diversity of an identifiable geographic area or Natural Heritage System (MNR, 2000). There are four categories of SWH: i) Seasonal Concentration Areas of Animals, ii) Rare Vegetation Communities or Specialized Habitat for Wildlife, iii) Habitat for Species of Conservation Concern (excluding *Endangered* or *Threatened* Species) and iv) Animal Movement Corridors. The SWH Ecoregion 3E Criterion Schedules (MNR, 2012) provides further information on determining the presence of SWH which is then verified by ground surveys. The records review and field surveys for this Project indicated that the following avian SWH types occur or could occur within the Shining Tree TLA local study area and regional study area:

- one type of migratory bird SWH in the form of Seasonal Concentration Areas of Animals (Waterfowl Stopover and Staging Areas: Aquatic);
- three types of avian SWH in the form of Specialized Habitat for Wildlife (Waterfowl Nesting Areas, Bald Eagle and Osprey Nesting Habitat and Woodland Raptor Nesting Habitat).
- one type of migratory bird SWH in the form of Habitat for Species of Conservation Concern (Special Concern and Rare Wildlife Species).

Waterfowl Stopover and Staging Areas (Aquatic) are not expected to be directly affected by construction of the Shining Tree TLA as it is assumed that all waterbodies and wetlands will be fully spanned by the TLA wires and as such there will be no TLA infrastructure within waterbodies or wetlands.

Marsh bird species were not observed within the local study area, therefore, the density and diversity of indicator species for any single wetland feature did not meet the MNR criteria of SWH (Marsh Breeding Bird Habitat) as defined in the SWH 3E Ecoregion Criteria Schedules (MNR, 2012). Marsh habitat exists within the local study area but is not expected to be directly affected by the construction, operation or closure of the Shining Tree TLA as it is assumed that all waterbodies and wetlands will be fully spanned and as such there will be no direct footprint of the TLA within the watercourses or wetlands. However, there is the potential for waterbodies, wetlands and watercourses located adjacent to Project activities to be indirectly affected by sedimentation during construction (during forest clearing). It should be noted that waterfowl (wild ducks, geese and swans), cranes, rails, bitterns, wrens, terns and most other marsh breeding birds are protected under the Migratory Birds Convention Act.

The Natural Heritage Information Centre (NHIC) Natural Areas Database did not identify any areas within the regional study area as having significant or unique natural heritage features pertaining to migratory bird species. Natural heritage features may be identified by the MNR, Conservation Authorities, the International Biological Program or by non-governmental organizations such as the Federation of Ontario Naturalists, the Nature Conservancy of Canada or Bird Studies Canada. Natural areas include evaluated wetlands, Earth and Life Science Areas of Natural and Scientific Interest, provincial and national parks, Conservation Areas, International Biological Program Sites, No Important Bird Areas or nature reserves were identified within the Shining Tree local study area or regional study area. In addition, the MNR's Land Information Ontario (LIO) database did not identify any Provincially Significant Wetlands within the regional study area.

There is some potential for bird strikes to occur along access roads and to a lesser extent along the ROW itself during regular maintenance activities by service vehicles, as well as power line strikes. Effects of vehicle collisions are considered to be limited because of the low traffic volumes and reduced traveling speeds to ensure the safety of construction crews along the ROW. As the existing ROW along the Shining Tree route has a number of all-season road accesses already and no significant accesses are proposed, there would be no new corridor access that would increase traffic volume or hunting pressures.

Mitigation measures that will be used to reduce potential adverse effects to birds during the TLA construction phase will include the following:

- minimize the TLA footprint to the extent practicable;
- construct the TLA during winter to avoid sensitive wildlife breeding seasons such as the migratory bird nesting season (May 1 to July 31), where applicable;
- maintain existing vegetation ground cover to the extent practicable;
- install conductor wires at a sufficient distance apart to prevent the accidental electrocution (contact of wingtips with wire) of large avian species particularly species such as ducks, geese, herons and cranes that fly in flocks;

- utilize existing infrastructure for access and avoid constructing new roads and other corridors where other alternatives exist; and
- advise construction crews not to interfere or harass wildlife. No hunting by construction crews will be allowed; and
- educate contractors and workers on how to handle food and food wastes in a responsible manner and create and enforce policies to ensure no feeding of wildlife.

Major tree clearing efforts will be avoided during the breeding bird season. There is currently no permit for incidental take of migratory bird nests/eggs and/or individuals but most species listed in Tables 3-5 and 3-6 are protected under the MBCA which means that habitat with nests cannot be destroyed until the fledgling birds have left the nest. For some species, the Ontario songbird nesting season is generally understood to start in May and extend until July 31 (Cadman et al*.,* 2007). Hawks, eagles, owls and ravens often begin nesting in early April.

As such, tree clearing should generally be undertaken from August 1 to April 1 to avoid disrupting any bird species during their nesting season as is required under the MBCA and FWCA. However, consultation with the MNR and Environment Canada will be undertaken prior to clearing activities to confirm seasonal restrictions. If tree clearing must be undertaken between the months of April and August, surveys will be conducted to confirm bird nesting activity prior to tree clearing activities. Should nesting sites be located within these areas, appropriate avoidance buffer areas around active nests would be required until the young have left the nest on their own accord. Appropriate buffers will vary depending on the species and should be implemented based on consultation with the MNR and Environment Canada.

Migratory bird SAR are discussed in more detail below.

3.1.8 Raptors

3.1.8.1 Relevant Background Information

The SWH Ecoregion 3E Criteria Schedules list two raptor SWH types: Woodland Raptor Nesting Habitat and Bald Eagle and Osprey Nesting Habitat. Common Ravens are included in this section because their nests are similar to those of many raptors and because raven nests are often subsequently used by raptors. Woodland nesting raptor species and Common Ravens are protected under the Fish and Wildlife Conservation Act. No protection is afforded to these species under the federal Species at Risk Act and Migratory Birds Convention Act, or under the provincial Endangered Species Act. Bald Eagles are provincially listed as *Special Concern* but are not listed federally under the Species at Risk Act. Bald Eagles and Osprey are offered protection under the Fish and Wildlife Conservation Act, but are not protected by the Endangered Species Act, Species at Risk Act or Migratory Birds Convention Act.

Woodland raptor nesting habitat is associated with all natural forested ecosites (MNR 2012). Some species construct large stick nests or use nests previously built by other bird species.

Others rely on cavities excavated in large mature trees by large woodpeckers or created by natural weathering of the tree. Table 1.2.2 of MNR (2012) identifies significant woodland raptor nesting habitat as the area occurring within a circle with a given radius around the nest. The radius of the habitat circle is dependent on the species present and ranges between 50 - 400 m (MNR 2010; 2012). Table 1.2.2 of MNR (2012) does not provide a habitat area for Common Raven nests.

Bald Eagle and Osprey nest are associated with the treed shorelines of lakes ponds, rivers, islands or other structure over water (MNR 2012). Significant Bald Eagle nesting, habitat (as defined in Table 1.2.2 of MNR, 2012) includes a nest that has been used or is suspected of having been used within the past five years, as well as habitat within a radius of 400 - 800 m around the nest (MNR, 2010; 2012). The safe definition is used for significant Osprey nesting habitat, though a circle having a radius of 300 m radius is used (MNR, 2010; 2012). The area of habitat from a 300 - 800 m radius is dependent on sight lines from the nest to the development and the inclusion of perching and foraging habitat.

3.1.8.2 Effects of Construction Phase on Raptors

Raptor species recorded along the proposed Shining Tree TLA included Bald Eagle, Osprey, Sharp-shinned Hawk, Broad-winged Hawk, Red-tailed Hawk, Merlin, American Kestrel, Northern Harrier, Barred Owl, Great Gray Owl and Northern Saw-whet Owl and Common Raven. Eight stick nests were across the local study area of which seven were confirmed to be active (see Appendix I). Common Ravens accounted for six active nests and one inactive nest. Five active nests and one inactive raven nests were had been built on hydro towers within the existing ROW. One active Sharp-shinned Hawk nest and one active Red-tailed Hawk were located east of the ROW. Three Bald Eagles and one Osprey were observed during aerial surveys, yet none were observed during ground surveys and no nests were located. Limited Bald Eagle nesting habitat in the form of large mature trees along lake shoreline was observed in proximity to the Shining Tree TLA (see Appendix I).

Vegetation clearing for construction of the Shining Tree TLA is anticipated to remove 538.7 ha of forested land capable of providing woodland raptors nesting habitat. No raptor nests are located within the proposed Shining Tree TLA footprint and it is not expected that habitat removal will affect existing, known raptor nests through habitat removal. It is still possible that unknown nests may be present, especially for smaller raptor species or cavity-nesting species. Project-related habitat loss would therefore be expected to adversely affect raptor species to a small degree.

Little research has been done into the sensitivity of Sharp-shinned Hawks to human disturbance. This species will respond aggressively towards humans approaching their nests, but lasting effects of this disturbance has not been quantified (Bildstein and Meyer, 2000). However, there is some evidence that nest checks by researchers do not lead to nest failures (Bildstein and Meyer, 2000). This species is one of a few that have adapted successfully to

living in urban habitats (Coleman et al., 2002) suggesting it has a higher tolerance for human disturbance than other raptor species. There has not been a change in the probability of observation in Ontario between the first and second OBBAs (Cadman et al., 2007) and this species has shown a modest population increase trend between 1966 and 2011 in the Boreal Hardwood Transition region (Sauer et al., 2002).

Red-tailed Hawks prefer patchy wooded landscapes created by urban and exurban sprawl of human communities, if adequate prey are available (Valentine, 1978; Hull 1980; Minor et al., 1993; Berry et al., 1998; Stout et al., 1998; Swan et al., 2000; Stout et al., 2006). Mannan et al. (2000) states that the presence of tall trees or other structures may provide a sufficient level of security for Red-tail Hawks to tolerate human activities. Red-tailed Hawks have shown a modest population increase trend between 1966 and 2011 in the Boreal Hardwood Transition region (Sauer et al., 2002) and prevalence is expected to increase where large forest tracts are fragmented by large-scale mechanical disturbance (Preston and Beane, 2009).

Motor vehicle collisions are listed as the top means of human-caused mortality of both Sharp-shinned Hawks and Red-tailed Hawks (Bildstein and Meyer, 2000; Preston and Beane, 2009). Vehicular traffic along the proposed Shining Tree TLA and nearby Highway 560 is not expected to increase dramatically or permanently as a result of TLA installation. As a result, risk of vehicular collisions with raptors is not anticipated to rise.

Direct disturbance to Common Raven nests is of much greater concern than habitat changes (Boarman and Heinrich, 1999). Ravens commonly colonize disturbed areas and it is believed that anthropogenic degradation of natural habitat may benefit Common Ravens (Boarman, 1993).

The following mitigation measures will be implemented to minimize potential adverse effects to raptors:

- development of a compact site to prevent encroachment of Project activities on nesting sites and adjacent habitat;
- inclusion of wildlife awareness information into regular safety and environmental inductions performed by the mine. Wildlife sighting logs or information boards will available to notify workers of local observations. Workers will be made aware of seasonal changes in local animal behaviour or presence in proximity to the TLA during construction;
- minimizing the level of potentially disturbing activities near any known or subsequently discovered active nest sites until the nest is vacated;
- enforcement of speed limits along proposed mine access roads to reduce the potential adverse effects of increased vehicular traffic associated with the mine. Signs warning drivers of the possibility of wildlife encounters will be posted in areas of high wildlife activity;

- disposing of food wastes generated on site in an appropriate manner that limits the attraction of wildlife, including Common Ravens, Turkey Vultures and Bald Eagles; and
- timely removal of carcasses of road-killed animals or any other carcasses found onsite to limit the attraction of wildlife, such as Common Ravens and Turkey Vultures.

In the event that future raptor nesting is observed within or in proximity to the TLA footprint, an acceptable buffer defined in the *Forest Management Guide for Conserving Biodiversity at the Stand and Site Scales* (MNR, 2010d) will be observed until breeding activities have ended and the nesting site has been abandoned. Workers will be made aware of locally nesting raptors to avoid unnecessary disturbance.

Mitigation measures described in this section are expected to be effective for their intended purposes and in many instances can be further optimized in response to monitoring data.

3.1.9 Species at Risk - Eastern Whip-poor-will

3.1.9.1 Relevant Background Information

The Eastern Whip-poor-will is designated as *Threatened* under both the provincial Endangered Species Act and Species at Risk Act. This species is also protected under the Migratory Birds Convention Act.

Breeding habitat for this species is not as dependant on forest species composition as on forest structure (Wilson 1985). Whip-poor-wills tend to nest in semi-open habitats such as rock or sand barrens with scattered trees, savannahs, old burns, areas of early to mid-succession and open woodlands (Mills 1987, Cink 2002). Areas of little ground cover are preferred for nesting (Eastman 1991). As a likely result, this species does not occupy areas were forest canopies are dense and closed (James and Neal 1986). In Ontario, pine, oak, aspen and birch are common tree species associations where whip-poor-will nests have been located. Aspen and birch are common and widespread throughout both the Shining Tree and Cross-Country TLAs with pine present to a lesser degree.

PIF (2008) reports that 5% of the global population of this species occurs in BCR 12, though OBBA (Cadman et al., 2007) and 2013 data found on EBird.org suggest that the local study area largely occurs beyond the northern limit of Eastern Whip-poor-will range. In Ontario, this boundary can be traced to where the Northern Shield meets the Southern Shield. It is at this junction where the Great Lakes - St. Lawrence Forest Region meets the more Boreal Forest Region.

3.1.9.2 Effects of Construction Phase on Eastern Whip-poor-will

One Eastern Whip-poor-will was observed along the southern stretch of the Shining Tree TLA. No Eastern Whip-poor-wills were recorded along the proposed Cross-Country TLA and very

little whip-poor-will habitat was found in the Cross-Country TLA local study area. Therefore little to no effects to this species are anticipated for the Cross-Country TLA, and as a result, no mitigation measures particular to this species are required.

One Eastern Whip-poor-will was observed along the southern stretch of the Shining Tree TLA (see Project Site Wildlife TSD). Aerial imagery interpretation of the location the birds were heard indicated that they occurred in a clearcut area surrounded by dense coniferous forest.

The Shining Tree TLA local study area is largely composed of upland mid-aged birch-aspen, mixed birch-aspen-spruce and spruce forests. This stretch of forest is largely characterized by dense canopy and dense understory and should be considered poor whip-poor-will nesting and foraging habitat. Open forest and rock outcrops are present, though rare.

Targeted surveys and historical data indicate that Eastern Whip-poor-wills are rare in the regional study area and this is supported by the baseline study results as only one whip-poor-will was recorded. Vegetation mapping, aerial reconnaissance and ground-truthing efforts further indicate that suitable habitat for this species is rare in the region and that effects to high-quality whip-poor-will habitat are improbable.

Whip-poor-wills present along the southern extend of the Shining Tree TLA may be effected through habitat loss, the introduction of anthropogenic structures and temporary increases in sound and human presence.

Clearing of land for the Shining Tree TLA will remove 271.1 ha of deciduous woodland habitat and 107.1 ha of shallow-soiled communities from the local study area, vegetation communities which may be used as nesting and foraging habitat by Eastern Whip-poor-wills. Unlike most aerial insectivores who hunt while in flight, whip-poor-wills stay perched until a prospective prey species flies past. As such, whip-poor-wills must perch within foraging habitat instead of foraging overtop of it. The detection of whip-poor-wills along the existing Shining Tree TLA implies that these birds are using previously cleared lands as foraging habitat. This may indicate that clearing of lands for a new ROW may not deter land use by whip-poor-wills and may perhaps expand local foraging habitat. Upon the completion of TLA construction, this area would undergo little further influence by human presence.

TLA construction is not anticipated to occur during the night, thus no sound or light disturbance to breeding or foraging whip-poor-wills is anticipated. Vehicular traffic along the proposed Shining Tree TLA and nearby Highway 565 is not expected to increase dramatically or permanently as a result of TLA installation. As a result, risk of vehicular collisions with whip-poor-will is not anticipated to rise.

Mitigation measures that will be used to reduce potential adverse effects to Eastern Whip-poor-will will include the following:

- minimizing Eastern Whip-poor-will foraging and nesting habitat loss by developing a compact site to reduce overall habitat loss and to limit potential adverse effects related to sound emissions, to the extent practicable;
- restricting the clearing of habitats to periods outside the breeding bird season which occurs from May 1 to July 31;
- implementing sound abatement strategies to dampen sound infiltrating habitats surrounding high traffic areas of the mine;
- maintaining forest buffers between Project components and whip-poor-will nesting and foraging habitat where practical;
- managing dust through dust suppression activities (best management practices); and
- enforcement of speed limits along mine-controlled roads to reduce the potential adverse effects of increased vehicular traffic associated with the Côté Gold Project. Signs warning drivers of the possibility of wildlife encounters will be posted in areas of high wildlife activity.

Mitigation measures described in this section are expected to be effective for their intended purposes and in many instances can be further optimized in response to monitoring data.

3.1.10 Species of Special Concern and Provincially Rare Species

3.1.10.1 Effects of Habitat Loss and Fragmentation

The SWH Ecoregion 3E Criteria Schedules describe habitat used by species of special concern and provincially rare species as being classified as SWH. Table 1.3 of the Criteria Schedules states that the SWH is the area of the habitat, to the finest Ecological Land Classification scale, that protects the habitat form and function. Ontario species of special concern are not protected under the Endangered Species Act but may receive protection under other legislation including the Migratory Birds Convention Act or Fish and Wildlife Conservation Act.

Five provincial species of special concern were recorded within the local study area: Bald Eagle, Common Nighthawk, Canada Warbler, Olive-sided Flycatcher and Snapping Turtle. These species have no formal protection under the provincial ESA to prohibit harming or destroying / disturbing their habitat (the Canada Warbler, Common Nighthawk and Olive-sided Flycatcher listed as *Threatened* under the federal SARA and are afforded protection under SARA) but these species are protected under the Migratory Birds Convention Act. Bald Eagles and their nests are protected under the Fish and Wildlife Conservation Act of which Sections 5(1) and 7(1) prohibit the killing of protected birds and the destruction or taking possession of nests and eggs.

Rusty Blackbird is listed federally as *Special Concern* and was observed incidentally in proximity to open wetland habitat within the Cross-Country TLA local study area.

Bald Eagle nesting, foraging and roosting habitat is identified as a unique SWH in the SWH Ecoregion 3E Criteria Schedules (MNR, 2012). Adverse environmental effects and mitigation strategies for Bald Eagles are described in the Project Site Wildlife TSD.

The Snapping Turtle is listed as a game reptile species under the Fish and Wildlife Conservation Act and as such, can be legally hunted under the authority of a license and in accordance with applicable regulations.

No provincially rare plant or wildlife species are known to occur within the Shining Tree or and Cross-Country TLA local study areas.

Vegetation clearing will result in the loss of habitat for species of Species Concern within the Shining Tree TLA. Effects to Canada Warbler, Common Nighthawk and Olive-sided Flycatcher are summarized below.

Canada Warbler

Nine Canada Warblers were recorded at nine locations along the Shining Tree TLA (including breeding bird point count stations 25, 144, 156, 157, 158, 160 and 163; see Appendix I). The presence of multiple singing male Canada Warblers and suitable breeding habitat strongly suggests that this species is breeding within the local study area. The Shining Tree TLA contains a slightly higher area of deciduous and mixed forest than the Cross-Country TLA, though suitability as Canada Warbler habitat is much higher (see Table 3-7). A cluster of Canada Warbler observations were made west of the southern terminus of the Shining Tree TLA. This area was only slightly above average for overall bird species diversity and number of species observed per count, though the total number of PIF species observed in the area was high (see Table 3-4).

Table 3-7: Habitat Type Preferences and Amount of Habitat Lost for Species of Special Concern Occurring within the Shining Tree TLA

Species	Habitat Type Preferences	Habitat Types Present	Amount of Habitat Types Lost
Canada Warbler	• This species breeds in wet mixed deciduous-coniferous forest with a well developed shrub layer, shrub marshes, ravines, steep brushy slopes and upland forests with canopy gaps that promote a well-developed shrub layer. Also breeds in riparian shrub forests on slopes and ravines, old-growth forests with canopy openings and a high density of shrubs and in stands regenerating after disturbances such as forest fires or logging (Conway 1999, Lambert and Faccio 2005, COSEWIC 2008b).	Deciduous and Mixed Forest	271 ha (306 ha)
Common Nighthawk	• This species nests in a wide range of open, vegetation free habitats including sand dunes, beaches, recently harvested forests, burnt areas, logged areas, rocky outcrops, rocky barrens, grasslands, pastures, peat bogs, marshes, lakeshores, river banks and mixed and coniferous forests (Environment Canada, 2013). Common Nighthawk breeding habitat is likely uncommon within the majority of the Shining Tree and Cross-Country TLA local study areas due to the high level of forested land characterized by dense understory and ground cover. Clearcuts occur along both TLAs, though some clearcut lands have been overgrown by aspen and birch regeneration. • Common Nighthawks are also known to occur in close proximity to humans and have been observed nesting on manmade structures such as rooftops, quarries and pathways and are commonly observed flying over urban environments such as downtown Toronto. High densities of nighthawks are known to persist in proximity to large mining projects where suitable nesting habitat is available. • Despite an apparent lack of Common Nighthawk nesting habitat within the Shining Tree and Cross-Country local study areas, these areas provide foraging opportunities for local nighthawks including wetlands, watercourses, and lakes along the existing Shining Tree ROW.	Upland Forest	551 ha
		Shallow-soiled Forest	107.1 ha
		Jack Pine regeneration	12.4 ha
Olive-sided Flycatcher	• Occur in natural forest openings, wetlands, forest edges and human-made openings such as clearcuts (Altman and Sallabanks 2000). In boreal Canada, this species commonly occurs in open habitat of muskegs, bogs and swamps dominated by spruce and tamarack (Erskine 1977).	Wetland	10.8 ha
		Coniferous Swamp	128 ha

Expected direct habitat loss for this species as a result of implementation of the proposed Shining Tree TLA is summarized in Table 3-7. This species exhibits a strong positive relationship between abundance and forest area (Robbins et al., 1989). The Ontario Landbird Conservation Plan for the Boreal Hardwood Transition has established a population objective of maintaining at least the current abundance and distribution levels for Canada Warbler in Ontario

BCR 12 (PIF, 2008). This species is considered a high concern and stewardship responsibility at both the continental (Rich et al., 2004) and the Ontario BCR 12 level (PIF, 2008). Ontario BCR 12 is expected to provide breeding habitat to 8% of this species' global population (PIF 2008). Though forest area will be lost, little fragmentation will occur as the Shining Tree TLA would occur alongside the existing ROW. As such, little additional interior forest habitat will be lost.

Common Nighthawk

Two Common Nighthawks were recorded at separate locations along the Shining Tree TLA during baseline inventories (see Appendix I). These individuals were recorded where clearcuts met dense coniferous forest. Expected direct habitat loss for this species as a result of implementation of the proposed Shining Tree TLA is summarized in Table 3-7.

BCR 12 is expected to provide breeding habitat to <1% of this species' global population (PIF 2008). Due to the low importance of this region to provincial and global populations of this species, the association of this species with clearcuts and other corridors in proximity to the Shining Tree local study area and the low quality of habitat within the local study area, removal of possible Common Nighthawk habitat is not expected to greatly affect this species.

Olive-sided Flycatcher

Olive-sided Flycatcher was located at a single location along the Shining Tree TLA (see Appendix I). This observation occurred along the existing Shining Tree ROW where lands had been previously cleared. Expected direct habitat loss for this species as a result of implementation of the proposed Shining Tree TLA is summarized in Table 3-7.

Ontario BCR 12 is expected to provide breeding habitat to 1% of this species' global population (PIF, 2008). Due to the low importance of this region to provincial and global populations of this species, the association of this species with clearcuts and other corridors in proximity to the Shining Tree local study area and the low quality of habitat within the local study area, removal of possible Olive-sided Flycatcher habitat is not expected to greatly affect this species.

3.1.10.2 Effects of Noise

Sound generated by Project activities may negatively affect the way a bird interacts with its environment and with other individuals. Where local population density is low, or where a single pair exists, the effects of sound masking can decrease breeding success by impairing the perception of behavioural triggers such as calls of females, begging calls of nestlings and approaching predators.

As crepuscular birds, Common Nighthawks depend on auditory cues for intraspecific interactions and during foraging at night. Individual territories are defined by calling birds as

breeding males attract prospective females through aerial breeding displays. However, sound disturbance at the proposed transmission line corridor will be limited to short periods of time during daylight in the construction and decommissioning phases. Therefore, the effects of Project-related noise on this species are expected to be negligible.

3.1.10.3 Effects of Roadways and Vehicular Traffic

Collisions with vehicles and human-built structures represent one of the largest sources of human caused mortality of songbirds. Increased vehicular traffic within the local study area may cause an increase in vehicular collisions with wildlife depending on species-specific behaviours.

Canada Warblers are area sensitive species and thus have an affinity for large tracts of habitat. As a result, this species has a low risk of mortality due to collisions with vehicles along roadways and any increase in vehicular traffic due to the Côté Gold Project is unlikely to affect this species.

Common Nighthawks commonly roost on gravel roads (Poulin et al., 1998) and therefore have a high risk of mortality due to collisions with vehicles. Foraging individuals or displaying males are also at risk of colliding with vehicles (Stevenson and Anderson, 1994).

Little data exists on the effects of roadways and vehicular traffic for Olive-sided Flycatchers. Given the propensity of this species to inhabit wetlands and open, disturbed habitats, this species is not expected to occur close to active roadways.

Mitigation measures that will be used to reduce potential adverse effects to all species of special concern and provincially rare species will include the following:

- development of a compact Project site to reduce overall habitat loss and to limit potential interference with wildlife of movement, as well as to limit sound emissions, to the extent practicable;
- restriction of vegetation clearing to periods outside of the breeding bird season which MNR has indicated occurs from May 1 to July 31;
- conducting TLA construction during the daytime, thus limiting sound or light disturbance to breeding or foraging Common Nighthawks;
- enforcement of speed limits along mine controlled roads to reduce the potential for adverse effects of increased vehicular traffic associated with the Côté Gold Project. Signs warning drivers of the possibility of wildlife encounters will be posted in areas of high wildlife activity;

- inclusion of wildlife awareness information into regular safety inductions performed by the mine. Workers will be made aware of seasonal changes in wildlife behaviour or presence in proximity to the mine; and
- disposing of food wastes generated on site will be by a means that limits the attraction of wildlife to the mine site.

Mitigation measures described in this section are expected to be effective for their intended purposes and in many instances can be further optimized in response to monitoring data.

3.2 Operations Phase

3.2.1 Vegetation Communities

Limited effects on terrestrial habitat have been identified for the operations phase. It is anticipated that periodic clearing of tall woody vegetation will be required to ensure adequate clearance below the conductors. This clearing will be completed either mechanically or manually, depending on the individual location and consultation activities and will not use herbicide application. Industry standard techniques will be used to ensure that the effect is constrained to the necessary area of clearance.

The routine maintenance of the TLA wires and poles will require service vehicles to travel along service roads and the TLA. The generation of dust by these vehicles is expected to be limited and can be minimized by having these vehicles drive slowly (i.e. 30 km/hr or less), particularly along the TLA.

Since effects on terrestrial habitat for the operations phase are expected to be minimal, no further mitigation measure are proposed.

3.2.2 Ungulates – Moose

As an existing ROW is present along the proposed Shining Tree TLA, local Moose populations are expected to have adapted to the local setting. Expansion of the width of the current ROW by 45 m is not expected to have an appreciable negative effect on Moose behaviour as comparable quality habitats are distributed throughout the local and regional study areas. Regenerating browse species may increase availability of forage for Moose once construction is completed. However widening the ROW and providing additional access routes may result in increased hunting and predation pressure as ease of movement for larger packs of wolves and greater visibility will result from the increased ROW size. This effect is expected to last the life of the Project and can be reduced by the re-vegetation of the expansion portions of the TLA during closure.

The operating TLA itself does not pose any potential effects to Moose. Minor interference with Moose may occur related to vehicle movements associated with periodic inspections and minor maintenance of TLA infrastructure; however it is not anticipated that this is a concern.

Mitigation strategies for limiting adverse effects to Moose occurring within the local and regional study area during the operations phase include:

- construction crews will be advised not to interfere or harass wildlife. No hunting by construction crews will be allowed. Disciplinary actions will be taken should either occur;
- enforcement of speed limits along proposed access roads to reduce the potential for collisions with wildlife. Signs warning drivers of the possibility of wildlife encounters will be posted in areas of high wildlife activity;
- inclusion of wildlife awareness information into regular safety and environmental inductions. Workers and contractors will be made aware of seasonal changes in local deer or large mammal behaviour or presence; and
- contractors will be required to handle food and food wastes in a responsible manner and to workers will be educated and policies enforced to ensure no feeding of wildlife.

3.2.3 Furbearers – Wolves

Operating the TLA itself does not pose any potential effects to wolves. Minor interference with wolves may occur related to vehicle movements associated with periodic inspections and minor maintenance of the TLA infrastructure; however it is not anticipated that this is a concern. Once the TLA is in operations mode, noise from the TLA is expected to be minimal and not a disturbance to local wildlife. Increased recreational activities such as snowmobiling are not anticipated to increase significantly with ROW expansion; noise levels are expected to remain comparable to existing levels experienced along the ROW from these activities. There is a potential for increased access by hunters and trappers due to the creation of additional access roads as well as increased hunting efficiency or interest by hunters due to the larger ROW. Increased levels of trapping or hunting can negatively affect the local wolf population through increased human – induced mortality rates.

Mitigation strategies for limiting adverse effects to wolves occurring within the local and regional study area during the operations phase include:

- construction crews will be advised not to interfere or harass wildlife. No hunting by construction crews will be allowed. Disciplinary actions will be taken should either occur;
- enforcement of speed limits along proposed access roads to reduce the potential for collisions with wildlife. Signs warning drivers of the possibility of wildlife encounters will be posted in areas of high wildlife activity;

- inclusion of wildlife awareness information into regular safety and environmental inductions. Workers and contractors will be made aware of seasonal changes in large mammal behaviour or presence; and
- contractors will be required to handle food and food wastes in a responsible manner and to workers will be educated and policies enforced to ensure no feeding of wildlife.

3.2.4 Furbearers – American Marten

There are no potential effects posed to American Marten by the operation of the TLA. Minor interference with wildlife may occur related to vehicle movements associated with periodic inspections and minor maintenance of TLA infrastructure; however it is not anticipated that this is a concern. Once the TLA is in operations mode, noise from the TLA is expected to be minimal and not a disturbance to local wildlife. Increased recreational activities such as snowmobiling are not anticipated to increase significantly with ROW expansion; noise levels are expected to remain comparable to existing levels experienced along the ROW from these activities. There is a potential for increased access by trappers due to the creation of additional access roads. Increased levels of trapping have the potential to negatively affect local marten populations through increased human - induced mortality rates.

Mitigation strategies for limiting adverse effects to marten occurring within the local and regional study area during the operations phase include:

- construction crews will be advised not to interfere or harass wildlife. No hunting by construction crews will be allowed. Disciplinary actions will be taken should either occur;
- enforcement of speed limits along proposed access roads to reduce the potential for collisions with wildlife. Signs warning drivers of the possibility of wildlife encounters will be posted in areas of high wildlife activity;
- inclusion of wildlife awareness information into regular safety and environmental inductions. Workers and contractors will be made aware of seasonal changes in large mammal behaviour or presence; and
- contractors will be required to handle food and food wastes in a responsible manner and to workers will be educated and policies enforced to ensure no feeding of wildlife.

3.2.5 Furbearers – Black Bear

Operating the TLA itself does not pose any potential effects to Black Bears. Minor interference with Black Bears may occur related to vehicle movements associated with periodic inspections and minor maintenance of TLA infrastructure, however it is not anticipated that this is a concern. Once the TLA is in operations mode, noise from the TLA is expected to be minimal and not a disturbance to local wildlife. Increased recreational activities such as snowmobiling are not anticipated to increase significantly with ROW expansion and noise levels are expected to remain comparable to existing levels experienced along the ROW from these activities. There is a potential for increased access by hunters and trappers due to the creation of additional access

roads as well as increased hunting efficiency or interest by hunters due to the larger ROW. Increased levels of trapping or hunting can negatively affect local Black Bear population through increased human - induced mortality rates.

Mitigation strategies for limiting adverse effects to Black Bears occurring within the local and regional study area during the operations phase include:

- enforcement of speed limits along proposed access roads to reduce the potential for collisions with wildlife. Signs warning drivers of the possibility of wildlife encounters will be posted in areas of high wildlife activity;
- inclusion of wildlife awareness information into regular safety and environmental inductions. Workers and contractors will be made aware of seasonal changes in large mammal behaviour or presence;
- construction crews will be advised not to interfere or harass wildlife. No hunting by construction crews will be allowed. Disciplinary actions will be taken should either occur; and
- contractors will be required to handle food and food wastes in a responsible manner and to workers will be educated and policies enforced to ensure no feeding of wildlife.

3.2.6 Bats

As the existing ROW is present along virtually the entire proposed Shining Tree TLA, most local species are expected to have adapted to the local setting. Expansion of the width of the current ROW by 45 m is not expected to have an appreciable effect on bad roosting habitat or behaviour (i.e. reproductive output) following the completion of construction. Minor interference may occur related to vehicle movements associated with periodic inspections and minor maintenance of TLA infrastructure. Periodic clearing of the ROW may limit the insect productivity of potential foraging habitat afforded by the forest opening provided by the ROW.

Transmission line towers and power lines are not expected to negatively affect bats over land or over water. Little evidence indicates that bat populations experience mortality via collisions with towers or electrocutions. Nicholls and Racey (2007) indicate that bats may avoid electromagnetic fields emitted by military radar installations, though further study has been limited and has not included electromagnetic fields produced by power lines.

Mitigation measures that will be used to reduce potential adverse effects to bats during the Shining Tree TLA operation phase will include minimizing the speed of service vehicles along service roads and the TLA to lessen dust production and limit the zone of influence.

3.2.7 Migratory Birds

As the existing ROW is present along virtually the entire proposed Shining Tree TLA, most local species are expected to have adapted to the local setting. Expansion of the width of the current

ROW by 45 m is not expected to have an appreciable effect on bird densities or behaviour (i.e. reproductive output) following the completion of construction. Minor interference may occur related to vehicle movements associated with periodic inspections and minor maintenance of TLA infrastructure. Periodic clearing of the ROW may cause relocation of species that prefer early successional vegetation.

Power line strikes and electrocutions are a major source of bird mortalities. A wide variety of birds are susceptible to power line strikes. Large, less maneuverable species are more prone to power line collisions (Huckabee, 1993) and young birds are more likely to strike powerlines than adult birds (Manville, 2005). In the case of the Shining Tree TLA, species at greater risk of collisions include Great Blue Herons, Sandhill Cranes and waterfowl. The combination of new lines spanning sections of Lake Kenogamissi will add additional risk to birds avoiding the current transmission line spanning this waterbody.

While tower collisions are a known source of mortality to migrating birds, particularly passerines, is it not anticipated that the towers used for the Shining Tree TLA will cause significant effects. Taller towers (especially those exceeding 300 m) and those illuminated with solid or pulsating incandescent red lights or stabilized by guy wires have increased likelihood of collisions by birds (Manville, 2005). Towers positioned near wetlands, along major songbird migration pathways or corridors and in areas with a history of inclement weather during spring and fall migrations are also likely to experience increased bird mortality (Manville, 2005). H-frame wooden structure poles 18.3 to 22.3 m in height would be used along the Shining Tree TLA with limited use of dead-end steel towers measuring 70 m. At a height of 18.3 to 22.3 m, the majority of the TLA would be at or near tree-top level. As such, tower and line level would be well below the height of the existing 115 kV line. Towers will not be lit and guy wires will only be required for the 70 m dead end poles. Little research has been conducted on collisions of birds with short towers, though risk of avian collision with such structures is considered low.

Mitigation measures that will be used to reduce potential adverse effects to birds during the TLA operation phase will include the following:

- minimize the speed of service vehicles along service roads and the TLA to lessen dust production and limit the zone of influence; and
- implement marker balls, bird diverters, or other strategies to reduce the likelihood of bird collisions with power lines in high-risk location such as near wetlands or other areas of topography.

3.2.8 Raptors

Limited Project activity is expected to occur during the Shining Tree operations phase. Operation of the TLA is not expected to have an appreciable effect on bird densities or behaviour (i.e. reproductive output) following the completion of construction. Minor interference may occur related to vehicle movements associated with periodic inspections and minor

maintenance of TLA infrastructure. Periodic clearing of the ROW may cause relocation of species that prefer early successional vegetation.

Periodic clearing of the ROW will maintain open habitat which may increase suitable foraging habitat for some raptor species such as Red-tailed Hawks, Broad-winged Hawks and American Kestrels (Preston and Beane, 2009; Crocoll, 1984; Smallwood and Bird, 2002).

Power line strikes and electrocutions are a major source of bird mortalities. Electrocutions are a notable risk to raptors which may nest and perch on towers and power lines. Electrocution is considered the fourth leading cause of death for Bald Eagles (Lehman, 2001). A wide variety of birds are susceptible to power line strikes. Large, less maneuverable species are more prone to power line collisions (Huckabee, 1993) and young birds are more likely to strike power lines than adult birds (Manville, 2005). In habitats away from wetlands, raptors are among the most susceptible to collisions with power lines (Manville, 2005).

Mitigation measures that will be used to reduce potential adverse effects to birds during the TLA operation phase will include the following:

- minimizing the speed of service vehicles along service roads and the TLA to lessen dust production and limit the zone of influence; and
- implement marker balls, bird diverters, or other strategies to reduce the likelihood of bird collisions with power lines in high-risk location such as near wetlands or other areas of topography.

3.2.9 Species at Risk - Eastern Whip-poor-will

Limited Project activity is expected to occur during the Shining Tree TLA operations phase. Operation of the Shining Tree TLA is not expected to have an appreciable effect on bird densities or behaviour (i.e. reproductive output) following the completion of construction. Minor interference may occur related to vehicle movements associated with periodic inspections and minor maintenance of TLA infrastructure.

Mitigation measures that will be used to reduce potential adverse effects to birds during the TLA operation phase will include minimizing the speed of service vehicles along service roads and the TLA to lessen dust production and limit the zone of influence.

3.2.10 Species of Special Concern and Provincially Rare Species

Potential operations effects on Canada Warblers, Olive-sided Flycatchers and Common Nighthawks along the Shining Tree TLA will be similar to those experienced by other migratory bird species nesting within local study area and regional study area.

As the existing ROW is present along virtually the entire proposed Shining Tree TLA, most local species are expected to have adapted to the local setting. Expansion of the width of the current ROW by 45 m is not expected to have an appreciable effect on the densities or behaviour (i.e. reproductive output) of birds designated as *Special Concern* following the completion of construction. Minor interference may occur related to vehicle movements associated with periodic inspections and minor maintenance of TLA infrastructure. Periodic clearing of the ROW may cause relocation of species that prefer early successional vegetation.

Mitigation measures that will be used to reduce potential adverse effects to birds during the TLA operation phase will include the following:

- minimizing the speed of service vehicles along service roads and the TLA to lessen dust production and limit the zone of influence; and
- implement marker balls, bird diverters, or other strategies to reduce the likelihood of bird collisions with power lines in high-risk location such as near wetlands or other areas of topography.

3.3 Closure Phase

3.3.1 Vegetation Communities

During the closure and decommissioning phase, vehicles will travel the length of the corridor to facilitate removal of the TLA wires and towers. Some clearing or disturbance of regrown trees and shrubs may be necessary to allow vehicle direct access to the TLA infrastructure for removal. This effect will be temporary and as root masses and ground cover vegetation will remain intact, natural regrowth is anticipated to occur. Mitigation measures for the closure phase include:

- vegetation removal will be reduced to the amount necessary to support closure activities;
- retaining existing low ground cover vegetation thereby minimizing vegetation clearing and allowing for the maintenance of root masses and ground vegetation that will reduce the potential for erosion and encourage continued vegetation growth beyond closure;
- remove TLA infrastructure in the winter to minimize the potential for ground disturbance and soil erosion by equipment and vehicles and to reduce the necessity for creation of additional permanent access roads;
- remove TLA infrastructure in the winter to avoid sensitive wildlife breeding seasons such as the migratory bird nesting season, where applicable;
- minimizing the speed of service vehicles along service roads and the TLA to lessen dust production and limit the zone of influence; and
- encourage natural revegetation and recolonization of the ROW as part of the reclamation process.

3.3.2 Ungulates – Moose

Moose may be temporarily affected by noise effects and other disturbance related to decommissioning activities, as well as direct vegetation and habitat loss caused by clearing related to temporary access to remove TLA infrastructure. As decommissioning is anticipated to take less time than construction, the level of disturbance will be proportionally less. Nonetheless, there may be a local displacement of Moose but they are likely to return after activities cease. Once the TLA structures are removed, the ROW will be allowed to naturally infill with woody vegetation. Re-vegetation will act to reduce any increase in hunting efficiency from wolves or people by reducing visual sightlines and ease of movement.

Mitigation measures that will be used to reduce potential adverse effects to Moose during the TLA closure phase will include the following:

- schedule decommissioning activities outside the sensitive late winter period from January 1 – March 1, in areas identified as overwinter moose habitat;
- utilize existing infrastructure for access and avoid constructing new roads and other corridors where other alternatives exist;
- construction crews will be advised not to interfere or harass wildlife. No hunting by construction crews will be allowed. Disciplinary actions will be taken should either occur; and
- contractors will be required to handle food and food wastes in a responsible manner and to workers will be educated and policies enforced to ensure no feeding of wildlife.

3.3.3 Furbearers – Wolves

Wolves may be temporarily affected by noise effects and other disturbance related to decommissioning activities. As decommissioning is anticipated to take less time than construction, the level of disturbance will be proportionally less. Nonetheless, there may be a local displacement of wolves but they are likely to return after activities cease. Once the TLA structures are removed, the ROW will be allowed to naturally infill with woody vegetation.

Mitigation measures that will be used to reduce potential adverse effects to wolves during the TLA closure phase will include the following:

- utilize existing infrastructure for access and avoid constructing new roads and other corridors where other alternatives exist;
- construction crews will be advised not to interfere or harass wildlife. No hunting by construction crews will be allowed. Disciplinary actions will be taken should either occur; and
- contractors will be required to handle food and food wastes in a responsible manner and to workers will be educated and policies enforced to ensure no feeding of wildlife.

3.3.4 Furbearers – American Marten

American Marten may be temporarily affected by noise and other disturbance related to decommissioning activities. As decommissioning is anticipated to take less time than construction, the level of disturbance will be proportionally less. Nonetheless, there may be a local displacement of marten but they are likely to return after activities cease. Once the TLA structures are removed, the ROW will be allowed to naturally infill with woody vegetation.

Mitigation measures that will be used to reduce potential adverse effects to marten during the TLA closure phase will include the following:

- utilize existing infrastructure for access and avoid constructing new roads and other corridors where other alternatives exist;
- construction crews will be advised not to interfere or harass wildlife. No hunting by construction crews will be allowed. Disciplinary actions will be taken should either occur; and
- contractors will be required to handle food and food wastes in a responsible manner and to workers will be educated and policies enforced to ensure no feeding of wildlife.

3.3.5 Furbearers – Black Bear

Bears may be temporarily affected by noise effects and other disturbance related to decommissioning activities. As decommissioning is anticipated to take less time than construction, the level of disturbance will be proportionally less. Nonetheless, there may be a local displacement of Black Bears but they are likely to return after activities cease. Once the TLA structures are removed, the ROW will be allowed to naturally infill with woody vegetation.

Mitigation measures that will be used to reduce potential adverse effects to wolves during the TLA closure phase will include the following:

- utilize existing infrastructure for access and avoid constructing new roads and other corridors where other alternatives exist;
- construction crews will be advised not to interfere or harass wildlife. No hunting by construction crews will be allowed. Disciplinary actions will be taken should either occur; and
- contractors will be required to handle food and food wastes in a responsible manner and to workers will be educated and policies enforced to ensure no feeding of wildlife.

3.3.6 Bats

Bats may be temporarily affected by noise effects and other disturbance related to decommissioning activities, as well as direct vegetation and habitat loss caused by clearing related to temporary access to remove TLA infrastructure. As decommissioning is anticipated to

take less time than construction, the level of disturbance will be proportionally less. Nonetheless, there may be a local displacement of foraging activities that may occur along the ROW, but bats are likely to return after activities cease and appropriate foraging habitat is allowed to regenerate. Potential decommissioning effects to bats would be further limited by the decommissioning season, as most decommissioning is expected to take place in the winter.

Once the TLA structures are removed, the ROW will be allowed to naturally infill with woody vegetation.

Mitigation measures that will be used to reduce potential adverse effects to bats during the TLA closure phase will include the following:

- utilize existing infrastructure for access and avoid constructing new roads and other corridors where other alternatives exist;
- construction crews will be advised not to interfere or harass wildlife. Disciplinary actions will be taken should either occur.

3.3.7 Migratory Birds

Birds may be temporarily affected by noise effects and other disturbances related to decommissioning activities. As decommissioning is anticipated to take less time than construction, the level of disturbance will be proportionally less. Nonetheless, there may be a local displacement of sensitive species but they are likely to return after activities cease, if the habitat is appropriate. Potential decommissioning effects to migratory birds would be further limited by the decommissioning season, as most decommissioning is expected to take place in the winter. Once the TLA structures are removed, the ROW will be allowed to naturally infill with woody vegetation.

Mitigation measures that will be used to reduce potential adverse effects to birds during the TLA closure phase will include the following:

- schedule decommissioning activities outside the breeding bird nesting season (outside of May 1 to July 31);
- utilize existing infrastructure for access and avoid constructing new roads and other corridors where other alternatives exist;
- advise construction crew not to interfere or harass wildlife. No hunting by construction crews will be allowed. Disciplinary actions will be taken should either occur; and
- contractors will be required to handle food and food wastes in a responsible manner and to workers will be educated and policies enforced to ensure no feeding of wildlife.

3.3.8 Raptors

Raptors may be temporarily affected by noise effects and other disturbance related to decommissioning activities, as well as direct vegetation and habitat loss caused by clearing related to temporary access to remove TLA infrastructure. As decommissioning is anticipated to take less time than construction, the level of disturbance will be proportionally less. Nonetheless, there may be a local displacement of sensitive species but they are likely to return after activities cease, if the habitat is appropriate. Potential decommissioning effects to breeding raptors would be further limited by the decommissioning season, as most decommissioning is expected to take place in the winter while raptors are not on territory.

Once the TLA structures are removed, the ROW will be allowed to naturally infill with woody vegetation. Should protected stick nests be developed on TLA towers, the nests will be left in place undisturbed until direction can be provided by regulatory authorities.

Mitigation measures that will be used to reduce potential adverse effects to birds during the TLA closure phase will include the following:

- schedule decommissioning activities outside the breeding bird nesting season (outside of May 1 to July 31);
- utilize existing infrastructure for access and avoid constructing new roads and other corridors where other alternatives exist;
- direct effects to raptor nesting areas will be avoided. There are currently 7 stick nests on or near the existing ROW (see Appendix I). Should any stick nests be identified during construction, the area will be avoided until a qualified avian biologist can be contacted for direction;
- construction crews will be advised not to interfere or harass wildlife. No hunting by construction crews will be allowed. Disciplinary actions will be taken should either occur; and
- contractors will be required to handle food and food wastes in a responsible manner and to workers will be educated and policies enforced to ensure no feeding of wildlife.

3.3.9 Species at Risk - Eastern Whip-poor-will

Eastern Whip-poor-wills occurring in proximity to the Shining Tree TLA may be temporarily affected by noise effects and other disturbances related to decommissioning activities. As decommissioning is anticipated to take less time than construction, the level of disturbance will be proportionally less. Nonetheless, there may be a local displacement of sensitive species but they are likely to return after activities cease, if the habitat is appropriate. Potential decommissioning effects to Eastern Whip-poor-wills would be further limited by the decommissioning season, as most decommissioning is expected to take place in the winter.

Once the TLA structures are removed, the ROW will be allowed to naturally infill with woody vegetation.

Mitigation measures that will be used to reduce potential adverse effects to Eastern Whip-poor-will during the TLA closure phase will include the following:

- schedule decommissioning activities outside the nesting season (outside of May 1 to July 31);
- utilize existing infrastructure for access and avoid constructing new roads and other corridors where other alternatives exist;
- direct effects to Eastern Whip-poor-will nesting areas will be avoided;
- construction crews will be advised not to interfere or harass wildlife. No hunting by construction crews will be allowed. Disciplinary actions will be taken should either occur; and
- contractors will be required to handle food and food wastes in a responsible manner and to workers will be educated and policies enforced to ensure no feeding of wildlife.

3.3.10 Species of Special Concern and Provincially Rare Species

Potential closure effects on Canada Warbler, Common Nighthawk and Olive-sided Flycatcher along the Shining Tree TLA will be similar to those experienced by other migratory bird species nesting within local study area and regional study area.

Birds may be temporarily affected by noise effects and other disturbance related to decommissioning activities, as well as direct vegetation and habitat loss caused by clearing related to temporary access to remove TLA infrastructure. As decommissioning is anticipated to take less time than construction, the level of disturbance will be proportionally less. Nonetheless, there may be a local displacement of sensitive species but they are likely to return after activities cease, if the habitat is appropriate. Potential decommissioning effects to Rusty Blackbird would be further limited by the decommissioning season, as most decommissioning is expected to take place in the winter. Once the TLA structures are removed, the ROW will be allowed to naturally infill with woody vegetation.

Mitigation measures that will be used to reduce potential adverse effects to birds during the TLA closure phase will include the following:

- schedule decommissioning activities outside the breeding bird nesting season (outside of May 1 to July 31);
- utilize existing infrastructure for access and avoid constructing new roads and other corridors where other alternatives exist;

- construction crews will be advised not to interfere or harass wildlife. No hunting by construction crews will be allowed. Disciplinary actions will be taken should either occur; and
- contractors will be required to handle food and food wastes in a responsible manner and to workers will be educated and policies enforced to ensure no feeding of wildlife.

3.4 Post-Closure Phase and Summary of Effects through all Project Phases

Following Project closure, no further Project activities will occur and vegetation communities along the Shining Tree TLA would begin the process of natural regeneration and succession. Therefore, following Project closure, no negative environmental effects are anticipated during this phase.

3.4.1 Vegetation Communities

Overall, vegetation clearing during the construction phase of the Shining Tree TLA will result in the removal of 679.7 ha of forested communities including 128.6 ha of coniferous swamp. Natural revegetation of the TLA ROW following decommissioning will restore many of these communities to their original state over the course of time. With the implementation of mitigation measures and natural revegetation upon decommissioning, there will be no detectable residual effects to vegetation communities relative to baseline conditions.

The regional study area has a history of frequent forestry activities and fires and this is reflected in the current vegetation structure. Vegetation communities in the regional study area include young and mature stands of Trembling Aspen, Balsam Poplar and to a lesser extent White Birch, Balsam Fir and White Spruce, all of which are considered pioneer species, colonizing recently disturbed areas. Logging has taken place in several areas within the regional study area, as well as in the surrounding landscape.

The overall Project effects on vegetation communities, through all Project phases, are summarized as follows:

- no detectable effect relative to baseline conditions, and therefore, no detectable impact on the persistence of local populations;
- the effect is restricted to the Project footprint or local study area;
- the duration of the effect is greater than 15 years due to the time required for forest regeneration (in some cases, >60 years);
- the effect occurs infrequently as the majority of Project activity will occur only during the construction phase; and
- the effect is reversible as forest regeneration will begin immediately following Project decommissioning.

3.4.2 Ungulates – Moose

Overall, construction of the Shining Tree TLA will result in the removal of 679.7 ha of habitat including two Moose aquatic feeding areas and areas with high potential Moose aquatic carrying capacities as well as 36.3 ha of identified over-wintering areas and portions of areas with the potential to support moderate to moderate-high densities of Moose in the dormant season. These habitats are common throughout the local and regional study areas and Moose will be able to use these features during the life of the Project. In a local context, the removal of this habitat is notable but no population level effects are expected for Moose within the local and regional study areas. Predation and hunting rates on local Moose populations may occur under the expanded ROW and associated access road network. The increases in predation may have effects on local Moose but this result is not expected to occur at the population level as there is an existing ROW already present that local wolves may already be using. These effects would occur during the life of the Project and are reversible during closure of the Project when the expanded portion of the ROW is re-vegetated.

The overall Project effects on Moose, through all Project phases, are summarized as follows:

- no detectable effect relative to baseline conditions, and therefore, no detectable impact on the persistence of local populations;
- the effect is restricted to the Project footprint or local study area;
- the duration of the effect is greater than 15 years due to the time required for forest habitat regeneration (in some cases, >60 years);
- the effect occurs infrequently as the majority of Project activity will occur only during the construction phase; and
- the effect is reversible as habitat regeneration will begin immediately following Project decommissioning.

3.4.3 Furbearers – Wolves

Construction of the Shining Tree TLA will result in the removal of 679.7 ha of terrestrial habitat. These habitats are common throughout the local and regional study areas and vegetation removal is not anticipated to have long term negative effects on wolf populations. Noise from construction activities may temporary displace local wolves and/or local Moose that wolves depend on for food. However it is not anticipated that any displacement would last past the completion of construction.

Predation and hunting rates for wolves on local prey populations may occur under the expanded ROW and associated access road network. As the TLA is using an existing ROW, local wolf and prey populations are expected to have largely already adjusted to this feature on the landscape and significant changes are not anticipated.

Increased noise and disturbance from recreational activities such as snowmobiling are not anticipated to increase with the ROW expansion. There is a potential for increased access by hunters and trappers due to the creation of additional access roads as well as increased hunting efficiency or interest by hunters due to the larger ROW. Any changes in predator - prey dynamics or hunter and/or trapper access due to the expanded ROW would occur during the life of the Project and are reversible through Project closure when the expanded portion of the ROW regenerates back to an intact forest community.

The overall Project effects on wolves, through all Project phases, are summarized as follows:

- no detectable effect relative to baseline conditions, and therefore, no detectable impact on the persistence of local populations;
- the effect is restricted to the Project footprint or local study area;
- the duration of the effect is greater than 15 years due to the time required for forest habitat regeneration (in some cases, >60 years);
- the effect occurs infrequently as the majority of Project activity will occur only during the construction phase; and
- the effect is reversible as habitat regeneration will begin immediately following Project decommissioning.

3.4.4 Furbearers – American Marten

Construction of the Shining Tree TLA will result in the removal of 679.7 ha of terrestrial habitat including 73 ha of identified core marten habitat. The regional study area has 10,958 ha and the local study area has 6,311 ha of core marten habitat to use adjacent to the ROW for individuals displaced by construction. These habitats are common throughout the local and regional study areas and vegetation removal is not anticipated to have long term negative effects on marten populations. Noise from construction activities may temporarily displace local marten and/or local prey that marten depend on for food. However it is not anticipated that any displacement would last past the completion of construction.

Increased noise and disturbance from recreational activities such as snowmobiling are not anticipated to increase with the ROW expansion. There is a potential for increased access by trappers due to the creation of additional access roads. Any changes in trapper access due to the expanded ROW would occur during the life of the Project and are reversible through Project closure when the expanded portion of the ROW and associated access roads regenerate back to an intact forest community.

The overall Project effects on American Marten, through all Project phases, are summarized as follows:

- no detectable effect relative to baseline conditions, and therefore, no detectable impact on the persistence of local populations;
- the effect is restricted to the Project footprint or local study area;
- the duration of the effect is greater than 15 years due to the time required for forest habitat regeneration (in some cases, >60 years);
- the effect occurs infrequently as the majority of Project activity will occur only during the construction phase; and
- the effect is reversible as habitat regeneration will begin immediately following Project decommissioning.

3.4.5 Furbearers – Black Bear

Construction of the Shining Tree TLA will result in the removal of 679.7 ha of terrestrial habitat. Vegetation removal may impact a known Black Bear den located within the footprint. Potential denning habitat features are frequent throughout the local and regional study areas and vegetation removal is not anticipated to have long term negative effects on Black Bear populations. Noise from construction activities may temporary displace local Black Bears. However it is not anticipated that any displacement would last past the completion of construction.

Increased noise and disturbance from recreational activities such as snowmobiling are not anticipated to increase with the ROW expansion. There is a potential for increased access by hunters and trappers due to the creation of additional access roads as well as increased hunting efficiency or interest by hunters due to the larger ROW. Any changes in predator - prey dynamics or hunter and/or trapper access due to the expanded ROW would occur during the life of the Project and are reversible through Project closure when the expanded portion of the ROW is regenerates back to an intact forest community.

The overall Project effects on Black Bears, through all Project phases, are summarized as follows:

- no detectable effect relative to baseline conditions, and therefore, no detectable impact on the persistence of local populations;
- the effect is restricted to the Project footprint or local study area;
- the duration of the effect is greater than 15 years due to the time required for forest habitat regeneration (in some cases, >60 years);

- the effect occurs infrequently as the majority of Project activity will occur only during the construction phase; and
- the effect is reversible as habitat regeneration will begin immediately following Project decommissioning.

3.4.6 Bats

A total of 145 ha of suitable vegetation community types for bat roosting habitat will be cleared for Project development, although these 145 ha have not been deemed to be significant roosting habitat as per MNR guidelines (MNR, 2000; 2011c). The majority of deciduous forest within the local study area is middle aged to mature aspen-birch hardwood forest that contains a low density of snags and cavity trees. The existing ROW passes through large tracts of forest which, despite the clearing of 45 m along their outer edge, will continue to maintain interior forest habitat. These larger forest complexes are also likely to have one or more foraging habitat features within it, including wetlands which help maintain the quality of any available roosting habitat therein.

Little increased local vehicular traffic is anticipated and the probability of vehicle - bat collisions will remain low. Few increases in barrier effects of roadways near the foraging habits of bat species (woodland edges, over water and above the height of most vehicles) will occur.

The overall Project effects on bats, through all Project phases, are summarized as follows:

- no detectable effect relative to baseline conditions, and therefore, no detectable impact on the persistence of local populations;
- the effect is restricted to the Project footprint or local study area;
- the duration of the effect is greater than 15 years due to the time required for forest habitat regeneration (in some cases, >60 years);
- the effect occurs infrequently as the majority of Project activity will occur only during the construction phase; and
- the effect is reversible as habitat regeneration will begin immediately following Project decommissioning.

3.4.7 Migratory Birds

Construction of the Shining Tree TLA will result in the removal of 679.7 ha of terrestrial habitat. In a local context, the removal of this habitat is notable but the removal of this habitat is not significant within the regional context and no population level effects are expected for migratory bird species within the local study area or regional study area.

Large tracks of uncut forest are more likely to contain mature interior forest, comprised of a greater diversity of plant and wildlife species compared to small isolated woodlands and also

provide interior woodland habitat to woodland area sensitive species. However, habitat fragmentation and the loss of interior woodland habitat along the Shining Tree TLA will be minimal due to the existing ROW. Furthermore, the continued presence of large tracts of interior forest habitat throughout the regional study area moderates the adverse effects caused by construction activities.

The overall Project effects on migratory birds, through all Project phases, are summarized as follows:

- no detectable effect relative to baseline conditions, and therefore, no detectable impact on the persistence of local populations;
- the effect is restricted to the Project footprint or local study area;
- the duration of the effect is greater than 15 years due to the time required for forest habitat regeneration (in some cases, >60 years);
- the effect occurs infrequently as the majority of Project activity will occur only during the construction phase; and
- the effect is reversible as habitat regeneration will begin immediately following Project decommissioning.

3.4.8 Raptors

It is anticipated that Project activities will have few adverse effects on the raptor nests located along the Shining Tree TLA local study area. Raptor species currently nesting within the footprint are relatively tolerant to anthropogenic disturbance. It is anticipated that the installation of the proposed transmission line may provide increased opportunities for raptor nesting and increase raptor hunting habitat. Common Ravens, Osprey and Red-tailed Hawks are all known to use transmission line poles as nesting locations and Common Ravens are already using the existing ROW as such. A large body of data shows that Osprey will readily use artificial structures as nesting sites (Avian Power Line Interaction Committee, 2006).

At closure, all disturbed sites will begin a process of natural revegetation resulting in various terrain types that can be utilized by a diversity of wildlife species, including raptors.

The overall Project effects on raptors, through all Project phases, are summarized as follows:

- no detectable effect relative to baseline conditions, and therefore, no detectable impact on the persistence of local populations;
- the effect is restricted to the Project footprint or local study area;
- the duration of the effect is greater than 15 years due to the time required for forest habitat regeneration (in some cases, >60 years);

- the effect occurs infrequently as the majority of Project activity will occur only during the construction phase; and
- the effect is reversible as habitat regeneration will begin immediately following Project decommissioning.

3.4.9 Species at Risk - Eastern Whip-poor-will

It is not anticipated that implementation of the Shining Tree TLA will result in the harm or displacement of Eastern Whip-poor-wills occurring in proximity to the proposed ROW. Adherence to mitigation and contingency measures will be crucial in assuring that persisting birds and the local population as a whole are not harmed by mining activities.

The overall Project effects on Eastern Whip-poor-will, through all Project phases, are summarized as follows:

- no detectable effect relative to baseline conditions, and therefore, no detectable impact on the persistence of local populations;
- the effect is restricted to the Project footprint or local study area;
- the duration of the effect is greater than 15 years due to the time required for forest habitat regeneration (in some cases, >60 years);
- the effect occurs infrequently as the majority of Project activity will occur only during the construction phase; and
- the effect is reversible as habitat regeneration will begin immediately following Project decommissioning.

3.4.10 Species of Special Concern and Provincially Rare Species

Côté Gold Project development will result in the clearing of i) 271.1 ha of deciduous and mixed woodland habitat which may be used as nesting habitat by Canada Warbler, ii) 551 ha of forest habitat and 107 ha of shallow-soiled habitat which may be used as nesting habitat for Common Nighthawk, and iii) 10.8 ha of wetland habitat and 128.6 ha of coniferous forest habitat suitable for Olive-sided Flycatcher.

Vegetation clearing and sound associated with the construction of the proposed TLA corridor will occur largely outside of the breeding season and is thus unlikely to cause mortality or impair reproductive success of these species.

Although increased local vehicular traffic may increase the probability of wildlife-vehicle collisions, enforced speed limits, road signs warning of wildlife and inclusion of wildlife safety into mine safety training inductions will greatly reduce this risk.

The overall Project effects on species of special concern and provincially rare species, through all Project phases, are summarized as follows:

- no detectable effect relative to baseline conditions, and therefore, no detectable impact on the persistence of local populations;
- the effect is restricted to the Project footprint or local study area;
- the duration of the effect is greater than 15 years due to the time required for forest habitat regeneration (in some cases, >60 years);
- the effect occurs infrequently as the majority of Project activity will occur only during the construction phase; and
- the effect is reversible as habitat regeneration will begin immediately following Project decommissioning.

4.0 PREDICTION OF EFFECTS: CROSS-COUNTRY ALIGNMENT

4.1 Construction Phase

4.1.1 Vegetation Communities

Figure 4-1 shows the proposed Cross-Country TLA footprint in relation to existing vegetation community types. Overall, the Cross-Country TLA is 57.1 km long and 45 m wide along an existing transmission line (the northern portion of the Shining Tree ROW) and an additional 64.7 km long and 50 m along the new clearing. A total of 549.2 ha of vegetation will be cleared in the Cross-Country TLA footprint. The primary forest cover types within the proposed Cross-Country TLA footprint and the number of hectares expected to be cleared for each during construction include:

- deciduous mixed forest (232.9 ha cleared, or 39.8% of the total footprint);
- coniferous forest (170.3 ha; 29.1%); and
- coniferous swamp (146 ha; 25%).

Combined, deciduous mixed forest, coniferous forest and coniferous swamp totaled 93.9% (549.2 ha) of the proposed Cross-Country TLA footprint. The remaining vegetation community types found within the Cross-Country TLA footprint consist of the following wetland vegetation and aquatic community types:

- tall shrub swamp (12.3 ha; 2.1%);
- low shrub fen (1.8 ha; 0.3%);
- narrow leaved emergent marsh (8.1 ha; 1.4%); and
- open water bodies (3.8 ha; 0.7%).

These wetland vegetation and aquatic community types accounted for 26 ha (4.5%) of the proposed footprint, but it should be noted that coniferous swamp (146 ha; 25%) is also considered a wetland community and therefore, 172 ha (29.5%) of the proposed footprint is considered to be wetlands. Excluding the coniferous swamp which consists of trees and will require clearing for the construction of the transmission line, wherever possible, all other wetlands and water bodies will be fully spanned (clear spanned) and as such there will be little to no direct footprint of the TLA within these habitats. Therefore, little to no aquatic or wetland habitat (excluding the coniferous swamp) will be directly affected (lost) from the construction of the Cross-Country TLA. There is the potential for water bodies and watercourses to be indirectly affected through sedimentation during construction (during forest clearing). However, this can be minimized by implementing standardized industry best management practices along with various mitigation measures discussed below.

Anthropogenic features such as highways and other roads, railways and cottages accounted for 9.3 ha (1.6%) of the proposed Cross-Country TLA footprint.

Table 4-1 summarizes the expected effect on vegetation communities (ELC ecosite categories) from development of the Cross-Country TLA. Environmental effects to vegetation communities within the footprint are direct (clearing) and are localized. The total area of forest habitat that would be displaced by the proposed Cross-Country TLA development is approximately 549.2 ha (93.9% of the entire ROW disturbance). All of the vegetation communities present within the Cross-Country TLA ROW are found within the remainder of study area and in the larger region. No locally significant plant communities have been identified within the proposed footprint and no provincially rare plant species or community types were located.

Table 4-1: Area (hectares) of Vegetation Removal for Various Vegetation Community Types for the Construction of the Cross-Country Transmission Line Corridor

Boreal ELC Community Type	ELC Code	Area (ha) Removed in Constructing the Cross-Country TLA
Very Shallow, Dry to Fresh: Pine - Black Spruce Conifer / Dry, Sandy: Jack Pine – Black Spruce Dominated / Fresh, Silty-Fine Loamy: Spruce - Fir Conifer	B012 / B034 / 104	0.0
Very Shallow, Dry to Fresh: Pine - Black Spruce Conifer / Dry to Fresh, Coarse: Jack Pine - Black Spruce Dominated / Moist, Fine: Black Spruce - Pine Conifer	B012 / B049 / B114	0.0
Very Shallow, Dry to Fresh: Pine - Black Spruce Conifer / Dry to Fresh, Coarse: Jack Pine - Black Spruce Dominated / Fresh, Silty-Fine Loamy: Spruce - Fir Conifer / Moist, Fine: Black Spruce - Pine Conifer	B012 / B049 / B104 / B114	0.0
Very Shallow, Dry to Fresh: Conifer / Dry, Sandy: Jack Pine – Black Spruce Dominated	B014 / B034	0.0
Very Shallow, Dry to Fresh: Conifer / Fresh, Silty-Fine Loamy: Spruce - Fir Conifer	B014 / 104	0.0
Dry, Sandy: Jack Pine – Black Spruce Dominated	B034	52.9
Dry, Sandy: Jack Pine – Black Spruce Dominated / Fresh, Silty-Fine Loamy: Spruce - Fir Conifer	B034 / B104	0.0
Dry, Sandy: Red Pine - White Pine Dominated	B040	14.0
Dry to Fresh, Coarse: Jack Pine - Black Spruce Dominated	B049	15.1
Dry to Fresh, Coarse: Jack Pine - Black Spruce Dominated / Moist, Fine: Black Spruce - Pine Conifer	B049 / B114	0.0
Dry to Fresh, Coarse: Pine – Black Spruce Conifer	B050	7.8
Dry to Fresh, Coarse: Aspen - Birch Hardwood	B055	135.7
Dry to Fresh, Coarse: Maple Hardwood	B058	0.6
Fresh, Clayey: Elm - Ash Hardwood	B082	10.4
Fresh, Silty-Fine Loamy: Spruce - Fir Conifer	B083	76.7
Fresh, Silty-Fine Loamy: Spruce - Fir Conifer	B104	82.6
Moist, Fine: Black Spruce - Pine Conifer	B114	7.3
Organic Poor Conifer Swamp	B127	37.1
Organic Intermediate Conifer Swamp	B128	2.7

Boreal ELC Community Type	ELC Code	Area (ha) Removed in Constructing the Cross-Country TLA
Organic Rich Conifer Swamp	B129	40.3
Mineral Thicket Swamp / Organic Thicket Swamp	B134 / B135	12.5
Sparse Treed Fen	B136	1.3
Sparse Treed Bog	B137	12.1
Poor Fen / Open Moderately Rich Fen	B139 / B140	0.4
Mineral Meadow Marsh / Organic Meadow Marsh	B142 / B144	8.0
Mineral Poor Conifer Swamp	B222	22.1
Mineral Intermediate Conifer Swamp	B223	9.8
Mineral Rich Conifer Swamp	B224	21.9
Jack Pine Regeneration / Cut	n/a	0.0
Water	n/a	3.8
Wetland	n/a	0.0
Anthropogenic	n/a	9.3
Total	n/a	**584.4**

The Cross-Country TLA design has focused on expanding 45.9 km of the existing Shining Tree ROW and thereby widening a corridor comprising of previously disturbed habitat. This reduces infrastructure requirements (roads) to access the ROW, reduces clearing of non-disturbed vegetation communities, and limits the creation of new edge effects through the 45.9 km stretch of the TLA. Subsequent to this, the Cross-Country TLA will be cut through forested areas for 71.5 km to reach the proposed mine site. Overall, the Cross-Country TLA is shorter than the Shining Tree TLA and improves operational efficiency and reduces Project costs.

Development of the Cross-Country TLA will require the clearing of approximately 549.2 ha of trees and tall shrubs to the ground surface; low ground cover vegetation will be left in place. Clearing of only tall woody vegetation to surface or near surface will allow for the maintenance of root masses and ground vegetation thereby reducing the potential for erosion and encouraging continued vegetation growth through operations and beyond closure. Merchantable or usable fuel wood will be managed based on existing agreements and the results of consultation with both licensed forestry operators and the local Aboriginal groups.

A total of 232.9 ha of deciduous mixed forest will be cleared during construction of the Cross-Country TLA footprint. Most of the affected hardwood forests in the local study area are relatively young in age or mid-aged due to historical and more recent area harvesting and fire activity. Regenerating forest and mid-aged forest with developing understory provides good Moose browse. Mid-age forest provides suitable habitat for a wide variety of area sensitive birds, while the interface of regenerating forest and more mature forest also provides suitable

foraging habitat for SAR species such as Eastern Whip-poor-will and Golden-winged Warbler. The Cross-Country TLA footprint also overlaps with approximately 316.3 ha of coniferous forest (including coniferous swamp). These vegetation community types may provide late winter Moose habitat, habitat for furbearers and contributes to woodlands supporting area sensitive breeding bird species. The Cross-Country TLA footprint also overlaps with approximately 172 ha of wetland communities (including coniferous swamp). No bog communities will be directly affected. Wetlands provide habitat for Beavers and other furbearers, Snapping Turtles, waterfowl, amphibians and fish. Effects of the Cross-Country TLA construction, operation and closure phases on wildlife are discussed in detail below.

There are no existing agricultural communities or cultural meadow communities within the proposed Cross-Country TLA footprint. Resultantly, no open country breeding bird habitats, which may support sensitive breeding bird communities, Sharp-tailed Grouse lekking sites or SAR (Bobolink and Eastern Meadowlark) were present.

There is a history of forestry and fire in the regional study area and this is reflected in the vegetation structure. Vegetation communities include young and mature stands of Trembling Aspen, Balsam Poplar and to a lesser extent White Birch, Balsam Fir and White Spruce, all of which are considered pioneer species, colonizing recently disturbed areas. Logging has taken place in several areas within the regional study area, as well as in the surrounding landscape.

Without mitigation, an increase in vehicle traffic along the TLA and associated service roads will result in increased dust generation and deposition on vegetation. Dust can affect photosynthesis, respiration and transpiration in plants and allow the penetration of phytotoxic gaseous pollutants (Farmer 1993). Overall, dust deposition on plants results in some visible injury symptoms and a general decrease in plant productivity. The structure of vegetation communities may also be affected. Those vegetation communities that are dominated by epiphytic lichen and Sphagnum moss species are typically the most sensitive of those studied (Farmer 1993).

IAMGOLD has adopted an engineering and development strategy that focuses on avoidance and minimization of environmental effects through sound and practical Project design, including the evaluation of two alternatives TLAs and the determination of a preferred alternative. The principal mitigation measures that are proposed to limit short and long term adverse effects to local vegetation communities include:

- development of the Cross-Country TLA route that minimizes the distance between the Porcupine Substation in Timmins and the Mine site, thereby limiting the extent of vegetation clearing needed for the TLA ROW;
- avoidance of routing through sensitive habitats to the extent practicable;
- minimize the widening of the new ROW to 50 m to limit the extent of vegetation clearing needed;

- retaining existing low ground cover vegetation thereby minimizing vegetation clearing and allowing for the maintenance of root masses and ground vegetation that will reduce the potential for erosion and encourage continued vegetation growth through operations and beyond closure;
- construct in winter to minimize the potential for ground disturbance and soil erosion during construction and to reduce the necessity for creation of additional permanent access roads;
- construct in winter to avoid tree and brush clearing and other construction activities during sensitive wildlife breeding seasons such as the migratory bird nesting season, where applicable;
- maintain low vegetated buffers adjacent to creek and river transmission line crossings (and tall vegetation along major rivers where conductors are unlikely to be affected by future growth);
- use existing permanent road / trail infrastructure to avoid crossing creeks and rivers. When necessary, cross creeks and rivers during winter using ice bridges wherever practical, ensuring that the ice bridges are sufficiently built up above the bed so as not to temporarily block river or creek flow (and providing mitigation should ice damming at spring melt be of concern);
- avoid placement of permanent structures in waterbodies and to the extent practicable, in low-lying areas (difficult for some portions of the existing ROW);
- use of industry best management practices for Project design and construction management;
- minimizing dust production along TLA service roads. The implementation of dust suppression methods such as road watering are not necessary along TLA service roads due to the infrequency of use by service vehicles. However, minimizing the speed of service vehicles along these roads will lessen dust production and limit the zone of influence; and
- upon mine closure, encouragement of natural revegetation and recolonization of the ROW as part of the reclamation process.

TLA planning efforts for the Cross-Country TLA have focused, where practical, on using lands that have been previously disturbed by the existing ROW and other past anthropogenic disturbance such as logging. Developing a TLA along an existing ROW is advantageous to environmental protection as it reduces the location of vegetation clearing to already disturbed site and limits the creation of new negative edge effects. The clearing of sensitive habitats including riparian areas will be avoided where reasonably practical as these riparian habitats are particularly productive for a number of wildlife species and provide an important function in water quality protection.

IAMGOLD is committed to encouraging and as practical, restoring the Côté Gold Project TLA corridor to a productive, naturalized vegetation community on cessation of mining. Mitigation measures described in this section are expected to be effective for their intended purposes.

4.1.2 Ungulates – Moose

Potential adverse effects to local Moose populations along the Cross-Country TLA footprint may include i) direct loss of habitat due to vegetation clearing, ii) long-term displacement due to habitat loss, iii) short-term displacement due to disturbance during construction and iv) potential habitat abandonment along the edges of uncut forest, iv) increased hunting by human, vi) increased predation by wolves, vii) increased risk of parasites from overlapping habitat use with deer, and viii) increase landscape fragmentation through the creation of a new ROW on the landscape. Direct mortality is not an expected effect from the construction of the Cross-Country TLA and is discussed further below.

Moose were observed throughout the regional study area including 21 individual sightings during the winter aerial survey and one sighting during the spring aerial survey (AMEC 2013) of which, 38% were along the Cross-Country TLA (see Figure 4). Winter Moose sightings and tracks were typically associated with clearcuts and regenerating forests, particularly those dominated by poplar and abundant young saplings that provide winter browse species.

Overall 89% (521 ha) of the Cross County TLA footprint has been included in the Ecoregion 3E bioclimatic Moose model; 11% (63 ha) of the TLA footprint closest to the mine site is part of Ecoregion 4E and does not have modelled carrying capacities available (see Figure 5), however Moose habitat data including overwintering and aquatic feeding areas from FMPs is available for this southern portion (see Figure 4). The majority of the Cross-Country TLA has the potential to support overall moderate carrying capacities of Moose (see Figure 5). Highest potential carrying capacities along this TLA occur west of Mattagami First Nations Reserve. Lowest potential carrying capacities densities are observed along the southern portion of the local and regional study areas approaching the proposed mine site location (see Figure 5).

Overwintering areas have been identified for a number of locations in the FMPs along the southern portion of the study area for Timiskaming, Spanish and Pineland forests (MNR 2013) with concentrations identified southwest of Mattagami Nation Reserve and southeast of Mesomikenda Lake (see Figure 4). These overwintering areas largely correspond with moderate to moderate-high potential Moose carrying capacities in the winter dormant season (see Figure 6); where higher densities of Moose have the potential to occur west of Mattagami Reserve and east of Gogama. In the northern part of the local and regional study areas, a large area adjacent to Mattagami Lake, adjacent and north of Kenogamissi Lake has also been identified as an area potentially capable of supporting higher carrying capacities of Moose in winter (see Figure 6).

Moose aquatic feeding areas have been identified for a number of locations in the FMPs for Timiskaming, Spanish, Pineland, Abitibi and Romeo-Malette forests (MNR 2013) with concentrations identified west and south-west of Mattagami First Nation Reserve along small watercourses west of Gogama (see Figure 4). Overall the simulation results reveal the highest possible aquatic carrying capacities for Moose in several areas (see Figure 5), a pattern not observed for Moose dormant season model results (see Figure 6). Moderate to high simulated Moose aquatic carrying capacities occur largely west Mattagami First Nation Reserve and west of Gogama, as well as several areas in the northern portion of the study area shared by the Shining Tree TLA, most notably east of Kenogamissi Lake and southeast of Timmins (see Figure 5).

The effect of the direct habitat loss from the removal of vegetation along a ROW is minor relative to the indirect effects, including alteration of predator - prey dynamics, influx of competition and disease and increased mortality by humans due to ease of access created by the linear corridor and associated landscape fragmentation. Potential effects of fragmentation are greatest where the landscape is largely untouched; a portion of the Cross-Country TLA goes through a tract of largely undisturbed habitat which will increase landscape fragmentation effects in this area.

Vegetation to be directly affected within this footprint comprises of both forest and coniferous swamp communities totalling 549.2 ha; 170.3 ha will be coniferous forest, 232.9 ha will be deciduous/ mixed forest and 146 ha will be coniferous swamp. Open wetland communities such as marsh or fen habitat comprise of 22.2 ha of the footprint; open water and wetland communities are to be spanned by the Project activities and direct vegetation removal in these areas is not expected.

These affected vegetation communities are also associated with identified Moose overwintering areas, aquatic feeding areas and habitats that have the potential to support higher carrying capacities of Moose in both winter and summer seasons (see Figures 4 to 7). Loss of terrestrial and wetland habitats and/or portions of associated key habitat areas for Moose including aquatic feeding and over wintering areas are not expected to result in any direct mortality of Moose.

The Cross-Country TLA is utilizing an existing ROW for the northern portion of the TLA, minimizing additional landscape fragmentation effects and habitat disturbance in this area; the existing ROW is 36 m in width and will be expanded by 45 m for a total corridor width of 81 m. However the southern portion of the TLA will be created through vegetation removal in an area not previously disturbed contributing to increased landscape fragmentation (see Figure 7 -1). The TLA directly effects 24 ha of Moose overwintering habitat identified in the FMPs (see Figure 4) and 208.8 ha of area identified with the potential to sustain high Moose aquatic carrying capacities (see Figure 5).

There are no potential areas identified in the bioclimatic Moose model capable of supporting high densities of Moose during the dormant season within either the local or regional study areas. However the TLA would disturb 205.4 ha of area with the potential to sustain moderate-high carrying capacities within the footprint (see Figures 6 and 7). Winter and spring 2013 aerial surveys reveal that several Moose were present in the FMP identified over-wintering areas southwest of Mattagami First Nations Reserve (see Figure 4) as well as the moderate-high carrying capacities areas located west of Mattagami First Nations Reserve and adjacent to Mattagami and Kenogamissi Lakes (see Figure 6), suggesting congruency between model and field based distribution estimates and potential core use areas. Suitable seasonal Moose habitats are evenly distributed throughout the local and regional study areas. Some of these areas are along the existing ROW in the northern portion of this TLA and Moose are still using them; early successional habitat created by the ROW development appears to be of equal value to Moose compared to the forest habitat prior to development. After construction, Moose habitat may become enhanced due to the presence of suitable forage species.

The main effects associated with the creation and/or expansion of the ROWs are the potential for increased hunting and/or predation which could reduce local Moose populations (Richard and Doucet, 2003). The potential for increased hunting may only occur in a fraction of ROW development, contingent on the increased hunter access from the new 5 km of access roads proposed as well as along the southern portion of the TLA where the new ROW would be created. Increased predation from wolves as a result of their increased rate of movement along the new ROW can also be expected. Predation rates have the potential to increase during the construction phase, as Project activities may result in long lengths of snow packed areas following the intensive clearing and construction activities, providing immediate opportunities for enhanced predator movement. As wolves are expected to have greater access to prey habitat along the expanded as well as the new ROW, there could be an increase in predation, particularly in areas previously thought to be safe by ungulate species (Thomas, 1995; James and Stuart-Smith, 2000; Courbin et al., 2009). This effect would be most pronounced in areas located along the new ROW, as access into these areas was previously more difficult. Recent data suggests that wolves selectively use ROWs during snow free months and increases in predation may be more concentrated from spring – fall (Manitoba Hydro, 2012). Changes in predation rates are expected to last the life of the Project and are expected to be reversible upon Project decommissioning and after the re-generation of the corridor has occurred to a point where forest communities have been restored.

Mitigation strategies for limiting adverse effects to Moose occurring within the local study area:

- development of a compact TLA to reduce overall habitat loss and to limit the potential adverse effects related to interference with wildlife of movement and sound effects, to the extent practicable;
- remove TLA infrastructure in the late fall to early winter to avoid sensitive late wintering period for Moose and maintain existing vegetation ground cover to the extent practicable;

- utilize existing infrastructure for access and avoid constructing new roads and other corridors where other alternatives exist;
- construction crews will be advised not to interfere or harass wildlife. No hunting by construction crews will be allowed;
- enforcement of speed limits along proposed access roads to reduce the potential for collisions with wildlife. Signs warning drivers of the possibility of wildlife encounters will be posted in areas of high wildlife activity;
- inclusion of wildlife awareness information into regular safety and environmental inductions. Workers and contractors will be made aware of seasonal changes in local deer or large mammal behaviour or presence; and
- contractors will be required to handle food and food wastes in a responsible manner and to workers will be educated and policies enforced to ensure no feeding of wildlife.

Late winter is the most stressful time for Moose; as such tree clearing in vicinity of known over wintering areas should generally be undertaken from August 1 to January 1 to avoid disrupting any individuals during this time and to avoid the breeding bird window.

4.1.3 Furbearers – Wolves

The effect of the direct habitat loss from the removal of vegetation along a ROW is minor relative to the indirect effects, including alteration of predator - prey dynamics and increased mortality by humans due to ease of access created by the linear corridor and associated landscape fragmentation. Potential effects of fragmentation are greatest where the landscape is largely untouched; a portion of the Cross-Country TLA goes through a tract of largely undisturbed habitat which will increase landscape fragmentation effects in this area.

Potential adverse effects to local wolf populations along the Cross-Country TLA footprint may include i) long-term displacement due to increased human disturbance, ii) short-term displacement due to increased human disturbance and iii) increased hunting and/or trapping by humans. Direct mortality is not an expected effect from the construction of the Cross-Country TLA. Development of the TLA may positively affect local wolf populations depending on the level of human activity of the corridor through improved access and prey availability along the new ROW. The main interaction to consider is whether potentially altered local wolf population dynamics affect other species such as Moose as increased access along the new ROW may facilitate higher predation rates of Moose in proximity to the new ROW.

Potential wolf rendezvous sites including open bogs, marshes and open forest are present within the local and regional study areas and wolf tracks were encountered during winter aerial surveys of the Cross-Country TLA confirming that this species is present in the local study area (see Figure 8).

Vegetation to be directly affected within this footprint comprises of both forest and coniferous swamp communities totalling 549.2 ha; 170.3 ha will be coniferous forest, 232.9 ha will be deciduous/ mixed forest and 146 ha will be coniferous swamp. Open wetland communities such as marsh or fen habitat comprise of 22.2 ha of the footprint; open water and wetland communities are to be spanned by the Project activities and direct vegetation removal in these areas is not expected. Typical densities for Gray Wolf, Black Bear and marten, as determined from the literature and the potential number of displaced individuals based on expected habitat losses during construction and operation of the Côté Gold Project are shown in Table 4-2.

Table 4-2: Potential Habitat Loss Effects on Wolf, Black Bear and American Marten

Species	Typical Density (# / km^2)	Potential Number of Displaced Individuals – Cross-Country TLA (# / km^2)	Reference
Wolf[1,2]	0.01	0.05	MNR (2005)
Black Bear[1]	0.2 – 0.4	1.1 – 2.2	MNR (2009)
American Marten[1]	0.4 – 1.2	0.2 – 6.6	Watt et al. (1996)

[1] In woodland habitat
[2] based on estimates from Zone 2 (MNR 2005)

As an existing ROW is present through the northern portion of the local and regional study areas, local wolves are expected to have adapted to this linear feature. Wolf tracks were observed in several locations along the existing ROW during the winter aerial surveys (see Figure 8). Therefore, expansion of the width of the current ROW by 45 m is not expected to have an appreciable negative effect on wolf behaviour in this portion of the TLA. However the southern portion of the TLA will be created through vegetation removal in an area not previously disturbed, contributing to increased landscape fragmentation within the regional study area and at larger scales. Loss of terrestrial and wetland habitats and/or portions of associated key habitat areas for wolves such as denning and/or rendezvous sites are not expected.

Vegetation clearing activities may result in temporary displacement of local individuals due to sound and human activity disturbance. Longer term displacement of wolves could occur depending on the extent to which humans use the new ROW located in southern portion of the TLA for hunting, trapping and recreational activities such as snowmobiling. This new corridor may increase wolf and hunter access to areas previously less accessible. Wolves may benefit from this improved access, increased hunting efficiency and prey availability. Conversely they may also avoid the new ROW if recreational use by people increases and/or experience higher mortality rates from increased hunting and trapping. Wolf distribution and movement patterns are altered at many degrees of human use levels (Paquet and Carbyn, 2003). The northern portion of the alignment is using an existing ROW; any current use by humans is not expected to increase significantly in this area and local wolf populations should have adapted to this existing linear feature.

The potential effect of increased hunting and/or trapping would only occur in a fraction of the ROW development, contingent on increased hunter/trapper access from the new 5 km of access roads proposed, as well as along the southern portion of the TLA where the new ROW would be created. Construction activities might also displace Moose or other secondary prey species which would temporarily alter movements and distribution of local wolves. There is potential for vehicle collisions with wolves along site access roads. During construction, increased traffic may increase the risk of vehicle collisions with wolves and other furbearers. As the operation phase begins, the risk of collisions is likely to decrease.

Sound disturbance caused by vegetation clearing during construction has the potential to mask the sounds of nearby predators, thereby effecting defensive responses of prey and hunting success of wolves (Blickley and Patricelli, 2010). Noise may act to temporarily influence local wolf - prey dynamics in the local study area during construction.

Mitigation strategies for limiting adverse effects to wolves occurring within the local and regional study areas:

- development of a compact TLA to reduce overall habitat loss and to limit the potential adverse effects related to interference with wildlife of movement and sound effects, to the extent practicable;
- utilize existing infrastructure for access and avoid constructing new roads and other corridors where other alternatives exist;
- construction crews will be advised not to interfere or harass wildlife. No hunting by construction crews will be allowed. Disciplinary actions will be taken should either occur;
- enforcement of speed limits along proposed access roads to reduce the potential for collisions with wildlife. Signs warning drivers of the possibility of wildlife encounters will be posted in areas of high wildlife activity;
- inclusion of wildlife awareness information into regular safety and environmental inductions. Workers and contractors will be made aware of seasonal changes in local mammal behaviour or presence; and
- contractors will be required to handle food and food wastes in a responsible manner and to workers will be educated and policies enforced to ensure no feeding of wildlife.

4.1.4 Furbearers – American Marten

Effects of fragmentation include increased forest edge, reduced forest interior habitat and increased isolation of forest patches. The effect of landscape fragmentation on a variety of wildlife species has been documented (Dyer et al., 2001; Courbin et al., 2009). Indirect effects of fragmentation such as alteration of predator - prey dynamics and increased mortality by humans due to ease of access and the potential effects of fragmentation are greatest on local wildlife communities where the landscape has largely remained undisturbed.

Potential adverse effects to local marten populations along the Cross-Country TLA footprint may include i) direct loss of habitat due to vegetation clearing, ii) long-term displacement due to habitat loss, iii) short-term displacement due to disturbance during construction and iv) potential habitat abandonment along the edges of uncut forest and iv) increased trapping by humans; vi) increased predation and vii) effects from landscape fragmentation Direct mortality is not an expected effect from the construction of the Cross-Country TLA.

Marten tracks were observed throughout the local and regional study areas within and adjacent to the existing ROW and well as in currently undisturbed forested along the southern portion of the TLA (see Figure 8). Over 127 ha of potential 60 year core marten habitat has been identified through the Romeo – Malette, Timiskaming and Spanish FMPs within the Cross-Country TLA footprint. Under most of the management plans, these areas should remain suitable as core habitat for 60 years through harvest deferrals (see Table 4-3 and Figure 8). These core areas have been identified in several areas within and adjacent to the existing ROW; west of Mattagami First Nations reserve marten were observed with a core use area identified in the Romeo-Malette and Timiskaming FMP's (see Figure 8). The regional study area has 10,958 ha and the local study area has 6,311 ha of core marten habitat to use adjacent to the ROW for individuals displaced by construction.

Table 4-3: American Marten Core Habitat

Study Area	Area (ha)[1]				
	Romeo Malette Forest	Timiskaming Forest[2]	Pineland Forest	Spanish Forest	Abitibi Forest
Regional Study Area	3515.33	3796.00	0.00	3647.53	n/a
Local Study Area	1833.84	2026.39	0.00	2451.04	n/a
Cross-Country Footprint	51.86	45.81	0.00	29.35	n/a

[1] 60 years
[2] Best Marten habitat

Vegetation to be directly affected within this footprint comprises of both forest and coniferous swamp communities totalling 549.2 ha; 170.3 ha will be coniferous forest, 232.9 ha will be deciduous/ mixed forest and 146 ha will be coniferous swamp. Open wetland communities such as marsh or fen habitat comprise of 22.2 ha of the footprint; open water and wetland communities are to be spanned by the Project activities and direct vegetation removal in these areas is not expected. Typical densities for Gray Wolf, Black Bear and marten, as determined from the literature and the potential number of displaced individuals based on expected habitat losses during construction and operation of the Côté Gold Project are shown in Table 4-2.

As an existing ROW is present through the northern portion of the local and regional study areas, local marten are expected to have adapted to this linear feature. Marten tracks were

observed along the existing ROW during the winter aerial surveys (see Figure 8) and expansion of the width of the current ROW by 45 m is not expected to have an appreciable negative effect on marten behaviour in this portion of the TLA. However the southern portion of the TLA will be created through vegetation removal in an area not previously disturbed, contributing to increased landscape fragmentation within the regional study area and at larger scales. Marten tracks were also observed in proximity to an identified core habitat in the intact forested southern portion of the TLA. Marten in this portion of the local study area may avoid the newly created ROW disrupting local movement patterns. Marten use coarse woody debris and tree cavities for denning and resting sites, features that are more commonly found in mature upland forest stands such as those identified as core marten habitats in each FMP. Vegetation clearing in these portions of the TLA may impact denning sites. No confirmed denning sites were located during summer ground surveys and extensive searches are not possible as these features they are very difficult to locate in a large study area without the use of telemetry.

Vegetation clearing activities may result in temporary displacement of local individuals due to noise and human disturbance. Longer term displacement of marten could occur depending on the extent to which humans use the expanded and/or new ROW for trapping. The portion of the TLA using the existing ROW is not anticipated to have increased levels of use by humans and any temporary displacement of marten during construction is not expected to last after construction is completed. The new ROW may displace local marten and provide increased access by trappers to marten populations in that area. Sound disturbance caused by vegetation clearing during construction also has the potential to mask the sounds of nearby predators or prey thereby impacting defensive responses and hunting success (Blickley and Patricelli, 2010). Noise may act to temporarily influence local predator - prey dynamics in the local study area during construction.

There is potential for vehicle collisions with marten along the access roads. During construction, increased traffic may increase the risk of vehicle collisions with large and small furbearers and other carnivores. As the operation phase begins, the risk of collisions is likely to decrease.

Mitigation strategies for limiting adverse effects to marten occurring within the local and regional study areas:

- development of a compact TLA to reduce overall habitat loss and to limit the potential adverse effects related to interference with wildlife of movement and sound effects, to the extent practicable;
- utilize existing infrastructure for access and avoid constructing new roads and other corridors where other alternatives exist;
- construction crews will be advised not to interfere or harass wildlife. No hunting by construction crews will be allowed. Disciplinary actions will be taken should either occur;

- enforcement of speed limits along proposed access roads to reduce the potential for collisions with wildlife. Signs warning drivers of the possibility of wildlife encounters will be posted in areas of high wildlife activity;
- inclusion of wildlife awareness information into regular safety and environmental inductions. Workers and contractors will be made aware of seasonal changes in local wildlife behaviour or presence; and
- contractors will be required to handle food and food wastes in a responsible manner and to workers will be educated and policies enforced to ensure no feeding of wildlife.

4.1.5 Furbearers – Black Bears

The impact of the direct habitat loss from the removal of vegetation along a ROW is minor relative to the indirect effects, including alteration of predator - prey dynamics and increased mortality by humans due to ease of access created by the linear corridor and associated landscape fragmentation. Potential effects of fragmentation are greatest where the landscape is largely untouched; a portion of the Cross-Country TLA goes through a tract of largely undisturbed habitat which will increase landscape fragmentation effects in this area.

Potential adverse effects to local Black Bear populations along the Cross-Country TLA footprint may include i) long-term displacement due to increased human disturbance, ii) short-term displacement due to increased human disturbance and iii) increased hunting and/or trapping by humans. Direct mortality is not an expected effect from the construction of the Cross-Country TLA.

Vegetation to be directly affected within this footprint comprises of both forest and coniferous swamp communities totalling 549.2 ha; 170.3 ha will be coniferous forest, 232.9 ha will be deciduous/ mixed forest and 146 ha will be coniferous swamp. Open wetland communities such as marsh or fen habitat comprise of 22.2 ha of the footprint; open water and wetland communities are to be spanned by the Project activities and direct vegetation removal in these areas is not expected. Typical densities for Gray Wolf, Black Bear and marten, as determined from the literature and the potential number of displaced individuals based on expected habitat losses during construction and operation of the Côté Gold Project are shown in Table 4-2.

As an existing ROW is present through the northern portion of the local and regional study areas, local Black Bears are expected to have adapted to this linear feature. There were no Black Bear tracks or nests observed along the southern portion of the TLA, however, tracks were observed along the existing ROW in the northern portion of the TLA (see Figure 8). During the spring aerial survey, a Black Bear was seen sitting next to the entrance to a winter den which was located in an open coniferous forest with young deciduous saplings along the northern portion of the local study area (see Figure 8) The sex of the bear was not confirmed and it cannot be determined whether the cubs were present. This denning site is within the footprint of the TLA and may be disturbed during vegetation clearing activities. Expansion of the

width of the current ROW by 45 m is not expected to have an appreciable negative effect on Black Bear behaviour.

The southern portion of the TLA will be created through vegetation removal in an area not previously disturbed, contributing to increased landscape fragmentation within the regional study area and at larger scales. Vegetation clearing activities may result in temporary displacement of local individuals due to sound and human activity disturbance. Longer term displacement of could occur depending on the extent to which humans use the new ROW for hunting, trapping and recreational activities such as snowmobiling. Black Bears can benefit from early-successional vegetation induced by roadside cutting and pipeline construction. The effects of habitat enhancement, however, may be offset by increased mortality by hunters. Under certain conditions, road surfaces and pipeline rights-of-way may serve as travel corridors for Black Bears (Jalkotzy et al., 1997).

This potential hunting and/or trapping effect may only occur in a fraction of ROW development, contingent on the increased hunter access from the new 5 km of access roads proposed as well as along the southern portion of the TLA where the new ROW would be created. There is potential for vehicle collisions with wildlife along site access roads. During construction, increased traffic may increase the risk of vehicle collisions is increased. As the operation phase begins, the risk of collisions is likely to decrease.

Sound disturbance caused by vegetation clearing during construction has the potential to mask the sounds of nearby predators or prey thereby impacting defensive responses of prey and hunting success of predators (Blickley and Patricelli, 2010). Noise may act to temporarily influence local wolf - prey dynamics in the local study area during construction.

Mitigation strategies for limiting adverse effects to Black Bears occurring within the local and regional study areas:

- development of a compact TLA to reduce overall habitat loss and to limit the potential adverse effects related to interference with wildlife of movement and sound effects, to the extent practicable;
- utilize existing infrastructure for access and avoid constructing new roads and other corridors where other alternatives exist;
- construction crews will be advised not to interfere or harass wildlife. No hunting by construction crews will be allowed. Disciplinary actions will be taken should either occur;
- enforcement of speed limits along proposed access roads to reduce the potential for collisions with wildlife. Signs warning drivers of the possibility of wildlife encounters will be posted in areas of high wildlife activity;

- inclusion of wildlife awareness information into regular safety and environmental inductions. Workers and contractors will be made aware of seasonal changes in local deer or large mammal behaviour or presence; and
- contractors will be required to handle food and food wastes in a responsible manner and to workers will be educated and policies enforced to ensure no feeding of wildlife.

4.1.6 Bats

Four species of bats were confirmed within the Cross-Country local study area. These included two tree-roosting species (Hoary Bat and Red Bat) and two cavity-roosting species (Little Brown Myotis and Silver-haired Bat). Hoary Bat, Red Bat and Silver-haired Bat are migratory species and both Hoary Bat and Silver-haired Bat are expected to breed in the local study area. Little Brown Myotis occurs year-round in Ontario and use hibernacula during the winter. Little Brown Myotis is included on the Species at Risk in Ontario list as *Endangered* and is protected under the provincial Endangered Species Act. All other Ontario bat species are protected under the Fish and Wildlife Conservation Act.

The Ontario Little Brown Myotis population is at risk of decline due to their low reproduction rate, communal hibernating behaviour and the recent spread of a fatal fungus known as WNS. WNS is caused by a fungal pathogen (*Pseudogymnoascus destructansI)* that has been devastating bat populations across eastern North America. It grows on the muzzle, ears and wings of hibernating bats and spreads quickly between individuals that hibernate in large groups. WNS causes bats to prematurely arouse from hibernation in the winter and subsequently leads to death from starvation due to excessive activity without a readily available food source.

As cavity roosters, Little Brown Myotis and Silver-haired Bat require a high density of mature (>80 years old), large diameter cavity trees for use as summer roost sites. Cavity-roosting bats may be directly affected during woodland clearing activities if roost trees are cleared while they are occupied by bats (June to October). Red Bat and Hoary Bat are foliage-roosting bats and prefer deciduous forest stands. Most species forage primarily at woodland edges or over wetlands. Development of the Cross-Country TLA will require the clearing of approximately of 232.9 ha of deciduous or mixed woodland habitat in the local study area. FRI data indicates that approximately 130 ha (56%) of woodland habitat to be removed is hardwood forest older than 80 years. However, maternity roost sampling in mature deciduous or mixed forest along the Cross-Country TLA did not locate any forest habitat with greater than 10 potential cavity roost trees per hectare (a MNR threshold to designate habitat as being significant). It was thus concluded that significant maternity roost habitat in proximity the Cross-Country TLA was absent or rare. Searches of old mine shafts and rock outcrops along the Cross-Country TLA did not reveal the presence of any potential hibernaculum locations.

During construction, Project activities will create sound that may disturb local wildlife. Increased sound levels reduce the distance and area over which acoustical signals can be perceived by

animals (Barber et al., 2009). Unlike other mammals found in the local study area, bats use echolocation to navigate their environment and to search for prey. Echolocation for bats consists of emitting pulses of high frequency sound and listening for returning echoes. Differences in timing and frequency between the pulses and their echoes provide bats with information about their surroundings (Naughton, 2012). Sound pulses used by Ontario bats for echolocation are generally above 18 kHz which is well above the frequency of traffic or construction sound. Unlike some bat species occurring outside of Ontario, no Ontario bats are known to listen for the sounds of prey items. As a result, sound caused by construction activities is unlikely to cause adverse effects to bat navigation or hunting. Neonates (newborn bats) within a roost site produce isolation calls to communicate with their mother. It is not clear whether anthropogenic sound causes adverse effects on mother-offspring communication. Sound created during construction of the Cross-Country TLA will be limited to daytime hours as no construction is anticipated to occur during the night.

Research has shown that roads can provide a variety of risks to bats including mortality from collisions, habitat fragmentation and barriers to movement. Research by Bennett and Zurcher (2013) indicates that breaks in community structure of bat commuting routes cause bats to turn back and may prevent bats from accessing critical resources such as traditional feeding grounds. As construction will occur in the daytime, a significant increase in nightly traffic along Highway 144 and associated side roads accessing construction zones is not anticipated. Additional roads or expansions of existing roads are anticipated to be required for access to construction areas. The expanded road network accessing the Cross-Country TLA will moderately increase fragmentation of bat habitat in the area.

Bats commonly feed at night in areas of high insect density such as along woodland edges and above wetlands. The Little Brown Myotis is known to hunt insects over water bodies including wetlands. No wetland, waterbody, or watercourse removal for construction of the Cross-Country TLA is anticipated as these natural features will be spanned by the transmission line.

Mitigation measures that will be used to reduce potential adverse effects to bats will include the following:

- development of a compact site to reduce overall habitat loss and to limit potential adverse effects related to sound emissions, to the extent practicable;
- natural revegetation of disturbed habitats at closure creating habitats capable of supporting a diversity of wildlife species, including bats; and
- enforcement of speed limits along proposed TLA access roads to reduce the potential adverse effects of increased vehicular traffic associated with construction.

Mitigation measures described in this section are expected to be effective for their intended purposes and in many instances can be further optimized through operations.

4.1.7 Migratory Birds

A total of 89 bird species were recorded along the Cross-Country TLA (see Appendix I). Upland deciduous forest and coniferous forest cover most of the Cross-Country local study area with interspersed wetland communities. (see Figure 3). Breeding bird point count data indicates that breeding bird diversity is relatively uniform along the Cross-Country TLA as the average diversity of point count clusters was 42.6 species (minimum = 40, maximum = 51; see Table 4-4) when clusters accessed by helicopters and clusters surveyed only once were removed. This uniformity was also reflected in the average species recorded per count (see Table 4-5). As a result, no particular area along the proposed Cross-Country TLA is considered of greater significance due to higher levels of avian diversity. Breeding bird diversity and abundance for the Cross-Country TLA was similar to that reported in the Atlas of the Breeding Birds of Ontario (Cadman et al., 2007; Table 4-5). This indicates that bird habitat occurring within the local study area is consistent with habitat occurring elsewhere in the region and the strong diversity recorded in the area reflects the quality of available habitat both in the local study area and throughout the regional study area.

Baseline surveys recorded 31 priority species from BCR 12 (see Appendix I). Amongst clusters of breeding bird point count survey points, an average of 12.3 PIF species was recorded per cluster. PIF diversity between clusters varied between 6 and 17 species with the greatest diversity occurring between Gogama and the mine site. Though avian diversity was relatively uniform across the Cross-Country TLA, PIF diversity along the Cross-Country TLA was generally reflective of the total species diversity per cluster as well as the average species per count for each cluster (see Table 4-4).

Table 4-4: Breeding Bird and PIF Diversity for Point Count Survey Clusters Along the Cross-Country TLA

Region	Point Counts 1-14	Point Counts 17-29	Point Counts 30-43	Point Counts 44-58	Point Counts 59-69[1]	Point Counts 71-82	Point Counts 83-95	Point Counts 111-123[1]	Point Counts 154-168	Point Counts 169-181	Point Counts 182-196[2]	Average
Total Species	41	41	40	42	26	44	42	36	40	51	25	39.1
Total PIF Species	11	12	11	13	10	16	15	10	14	17	6	12.3
Average Species per Count	10.7	12.4	14.7	11.3	8.63	14.5	13.8	10.1	13.9	17.1	8.5	11.9

[1]Survey stations were only accessible by helicopter. Surveys completed later in the morning and early afternoon due to fog which prevented flight during the early morning.

[2]Survey stations only surveyed once. Stations were added to raise coverage of Project Study Area.

Table 4-5: Relative Comparison of Bird Species Abundances Recorded Along the Cross-Country TLA Point Counts (PC) with those Recorded in 10 km^2 areas 17MN and 17MP as Reported in Atlas of the Breeding Birds of Ontario (OBBA) 2001-2005 (Cadman et al., 2007)

Species	Combined OBBA Data		
	Total PC Observed	% PC Observed	Abundance (Birds/PC)
White-throated Sparrow	551	64.8150	**1.4537**
Nashville Warbler	463	54.4764	**0.9483**
Red-eyed Vireo	360	42.3614	**0.6107**
Hermit Thrush	302	35.5300	**0.6035**
Magnolia Warbler	340	40.0021	**0.5741**
Ovenbird	298	35.0686	**0.5732**
Swainson's Thrush	252	29.6486	**0.4342**
Winter Wren	268	31.5250	**0.3764**
Yellow-rumped Warbler	237	27.8907	**0.3589**
Ruby-crowned Kinglet	189	22.2371	**0.2859**
Chestnut-sided Warbler	135	15.8821	**0.2153**
Golden-crowned Kinglet	152	17.8814	**0.2142**
American Robin	107	12.5836	**0.1740**
Yellow-bellied Flycatcher	127	14.9486	**0.1624**
Least Flycatcher	85	10.0043	**0.1471**
Common Yellowthroat	88	10.3471	**0.1423**
Alder Flycatcher	90	10.5793	**0.1399**
Yellow-bellied Sapsucker	97	11.4107	**0.1377**
Veery	74	8.7021	**0.1294**
Black-throated Blue Warbler	91	10.7114	**0.1212**
Dark-eyed Junco	77	9.0636	**0.1177**
Mourning Warbler	69	8.1136	**0.1129**
Black-capped Chickadee	66	7.7629	**0.1106**
Common Raven	74	8.7100	**0.1059**

Species	Cross-Country TLA		
	Total PC Observed	% PC Observed	Abundance (Birds/PC)
Nashville Warbler	105	81.40	**1.019**
White-throated Sparrow	80	62.02	**0.860**
Ovenbird	77	59.69	**0.771**
Magnolia Warbler	85	65.89	**0.736**
Yellow-rumped Warbler	82	63.57	**0.601**
Red-eyed Vireo	73	56.59	**0.558**
Winter Wren	79	61.24	**0.512**
Ruby-crowned Kinglet	72	55.81	**0.508**
Hermit Thrush	58	44.96	**0.399**
Swainson's Thrush	66	51.16	**0.364**
Common Raven	42	32.56	**0.256**
Canada Goose	6	4.65	**0.240**
Black-throated Blue Warbler	31	24.03	**0.221**
Black-throated Green Warbler	30	23.26	**0.209**
Northern Parula	36	27.91	**0.209**
Red-breasted Nuthatch	40	31.01	**0.202**
Black-capped Chickadee	39	30.23	**0.186**
Golden-crowned Kinglet	34	26.36	**0.186**
Yellow-bellied Flycatcher	33	25.58	**0.178**
Yellow-bellied Sapsucker	34	26.36	**0.171**
Ruffed Grouse	35	27.13	**0.155**
Blue-headed Vireo	26	20.16	**0.128**
Blue Jay	26	20.16	**0.124**
Blackburnian Warbler	21	16.28	**0.112**

Species	Combined OBBA Data		
	Total PC Observed	% PC Observed	Abundance (Birds/PC)
Cedar Waxwing	42	4.9429	**0.1059**
Tennessee Warbler	64	7.5279	**0.1023**
American Redstart	75	8.8243	**0.1000**
Chipping Sparrow	67	7.8836	**0.1000**
Blackburnian Warbler	74	8.7071	**0.0989**
Blue Jay	60	7.0614	**0.0942**
Red-breasted Nuthatch	64	7.5271	**0.0918**
Northern Flicker	65	7.6443	**0.0917**
American Crow	56	6.5886	**0.0847**
Black-throated Green Warbler	55	6.4743	**0.0835**
Bay-breasted Warbler	63	7.4114	**0.0823**
Common Loon	64	7.5300	**0.0812**
Blue-headed Vireo	63	7.4114	**0.0789**
Lincoln's Sparrow	52	6.1143	**0.0717**
Black-and-white Warbler	53	6.2336	**0.0694**
Swamp Sparrow	37	4.3529	**0.0636**
Gray Jay	32	3.7679	**0.0564**
Northern Parula	31	3.6457	**0.0459**
Hairy Woodpecker	28	3.2921	**0.0389**
Evening Grosbeak	23	2.7029	**0.0389**
Ruffed Grouse	31	3.6514	**0.0365**
White-winged Crossbill	22	2.5879	**0.0364**
Brown Creeper	26	3.0621	**0.0341**
Pileated Woodpecker	26	3.0607	**0.0330**
Song Sparrow	21	2.4693	**0.0306**
Boreal Chickadee	19	2.2393	**0.0282**
Philadelphia Vireo	20	2.3493	**0.0247**

Species	Cross-Country TLA		
	Total PC Observed	% PC Observed	Abundance (Birds/PC)
Common Yellowthroat	12	9.30	**0.112**
Chestnut-sided Warbler	13	10.08	**0.101**
Black-and-white Warbler	20	15.50	**0.097**
Mourning Warbler	16	12.40	**0.089**
American Crow	20	15.50	**0.081**
Least Flycatcher	12	9.30	**0.074**
Swamp Sparrow	9	6.98	**0.070**
Alder Flycatcher	11	8.53	**0.062**
American Redstart	11	8.53	**0.050**
American Robin	11	8.53	**0.050**
Downy Woodpecker	12	9.30	**0.047**
Northern Flicker	11	8.53	**0.047**
Bay-breasted Warbler	7	5.43	**0.043**
Brown Creeper	10	7.75	**0.039**
Common Loon	9	6.98	**0.039**
Pileated Woodpecker	9	6.98	**0.035**
Veery	7	5.43	**0.035**
Gray Jay	6	4.65	**0.031**
Purple Finch	6	4.65	**0.031**
Dark-eyed Junco	5	3.88	**0.027**
Hairy Woodpecker	7	5.43	**0.027**
Woodpecker sp	6	4.65	**0.027**
Boreal Chickadee	5	3.88	**0.023**
Cape May Warbler	4	3.10	**0.016**
Lincoln's Sparrow	3	2.33	**0.016**
Palm Warbler	3	2.33	**0.016**
American Bittern	3	2.33	**0.012**

Species	Combined OBBA Data		
	Total PC Observed	% PC Observed	Abundance (Birds/PC)
Northern Waterthrush	18	2.1179	**0.0235**
Pine Siskin	17	2.0000	**0.0223**
Common Snipe	13	1.5264	**0.0200**
Canada Warbler	16	1.8857	**0.0200**
Wilson's Warbler	14	1.6486	**0.0188**
Purple Finch	16	1.8821	**0.0188**
Downy Woodpecker	15	1.7657	**0.0188**
Tree Swallow	7	0.8271	**0.0141**
Red-winged Blackbird	7	0.8250	**0.0141**
Cape May Warbler	11	1.2964	**0.0130**
Bonaparte's Gull	7	0.8214	**0.0129**
Canada Goose	2	0.2379	**0.0106**
Scarlet Tanager	6	0.7071	**0.0095**
Olive-sided Flycatcher	7	0.8271	**0.0083**
Belted Kingfisher	7	0.8229	**0.0082**
Savannah Sparrow	2	0.2357	**0.0082**
Rose-breasted Grosbeak	5	0.5871	**0.0071**
Broad-winged Hawk	5	0.5914	**0.0059**
Solitary Sandpiper	3	0.3536	**0.0059**
American Bittern	5	0.5893	**0.0059**
Ring-necked Duck	3	0.3514	**0.0047**
American Kestrel	4	0.4693	**0.0047**
Common Merganser	2	0.2336	**0.0036**
Eastern Wood-Pewee	3	0.3536	**0.0035**
Warbling Vireo	2	0.2379	**0.0035**
Killdeer	2	0.2379	**0.0024**
Great Horned Owl	1	0.1157	**0.0024**

Species	Cross-Country TLA		
	Total PC Observed	% PC Observed	Abundance (Birds/PC)
Belted Kingfisher	3	2.33	**0.012**
Broad-winged Hawk	3	2.33	**0.012**
Bufflehead	1	0.78	**0.012**
Canada Warbler	2	1.55	**0.012**
Cedar Waxwing	3	2.33	**0.012**
Mallard	1	0.78	**0.012**
Philadelphia Vireo	3	2.33	**0.012**
Red Crossbill	1	0.78	**0.012**
Rose-breasted Grosbeak	3	2.33	**0.012**
Wilson's Snipe	3	2.33	**0.012**
Chipping Sparrow	2	1.55	**0.008**
Hooded Merganser	1	0.78	**0.008**
Spotted Sandpiper	1	0.78	**0.008**
American Goldfinch	1	0.78	**0.004**
American Kestrel	1	0.78	**0.004**
Black-backed Woodpecker	1	0.78	**0.004**
Common Goldeneye	1	0.78	**0.004**
Common Grackle	1	0.78	**0.004**
Evening Grosbeak	1	0.78	**0.004**
Northern Waterthrush	1	0.78	**0.004**
Olive-sided Flycatcher	1	0.78	**0.004**
Orange-crowned Warbler	1	0.78	**0.004**
Osprey	1	0.78	**0.004**
Pine Grosbeak	1	0.78	**0.004**
Ring-billed Gull	1	0.78	**0.004**
Ruby-throated Hummingbird	1	0.78	**0.004**
Sandhill Crane	1	0.78	**0.004**

Species	Combined OBBA Data		
	Total PC Observed	% PC Observed	Abundance (Birds/PC)
Ruby-throated Hummingbird	2	0.2379	**0.0024**
Yellow Warbler	2	0.2379	**0.0024**
Pine Warbler	1	0.1157	**0.0024**
Common Grackle	1	0.1157	**0.0024**
Common Goldeneye	2	0.2357	**0.0024**
Bald Eagle	1	0.1179	**0.0024**
Black-backed Woodpecker	2	0.2357	**0.0024**
Black-billed Cuckoo	2	0.2336	**0.0023**
Mallard	1	0.1179	**0.0012**
Sharp-shinned Hawk	1	0.1179	**0.0012**
Merlin	1	0.1179	**0.0012**
Sora	1	0.1179	**0.0012**
Eastern Kingbird	1	0.1179	**0.0012**
Eastern Bluebird	1	0.1179	**0.0012**
Wood Thrush	1	0.1179	**0.0012**
Brown Thrasher	1	0.1179	**0.0012**
European Starling	1	0.1179	**0.0012**
Palm Warbler	1	0.1179	**0.0012**
Indigo Bunting	1	0.1179	**0.0012**
Rusty Blackbird	1	0.1179	**0.0012**
Blue-winged Teal	1	0.1157	**0.0012**
Spruce Grouse	1	0.1157	**0.0012**
Turkey Vulture	1	0.1157	**0.0012**
Sandhill Crane	1	0.1157	**0.0012**
Herring Gull	1	0.1157	**0.0012**
Common Nighthawk	1	0.1157	**0.0012**
Eastern Phoebe	1	0.1157	**0.0012**

Species	Cross-Country TLA		
	Total PC Observed	% PC Observed	Abundance (Birds/PC)
Spruce Grouse	1	0.78	**0.004**
Tennessee Warbler	1	0.78	**0.004**
Wilson's Warbler	1	0.78	**0.004**
Yellow Warbler	1	0.78	**0.004**

Species	Combined OBBA Data		
	Total PC Observed	% PC Observed	Abundance (Birds/PC)
Great Crested Flycatcher	1	0.1157	**0.0012**

Species	Cross-Country TLA		
	Total PC Observed	% PC Observed	Abundance (Birds/PC)

Potential adverse effects to migratory bird communities along the Cross-Country TLA footprint may include i) direct loss of habitat due to vegetation clearing, ii) long-term displacement due to habitat loss, iii) short-term displacement due to disturbance during construction and iv) potential habitat abandonment along the edges of uncut forest, particularly by area-sensitive woodland breeding birds that will avoid edge. Direct mortality and decreased reproductive output is not an expected effect from the construction of the Cross-Country TLA and is discussed further below.

The overall amount of terrestrial habitat lost along the Cross-Country TLA (117.4 km long, 45 m wide, with only 5 km of new access roads proposed) due to new clearing of vegetation is 549.2 ha; of these, 232.9 ha will be deciduous/mixed forest and 170.3 ha will be coniferous forest. The loss of this terrestrial habitat is not expected to result in any direct mortalities of birds, nor in a decrease in reproductive effort of any bird species if clearing takes place outside of the breeding bird season (outside of April 1 – July 31) and if proper mitigation measures are implemented (discussed further below). However, vegetation removal will result in direct habitat loss causing displacement of individuals when they return to breed in the spring. Estimates of how many birds will be displaced due to the loss of various terrestrial habitat types are presented in Table 4-6.

Table 4-6: Potential Displacement of Breeding Bird Species Along the Cross-Country TLA Due to Habitat Loss

Common Name	Spruce (197 ha)	White Birch (151 ha)	Trembling Aspen (88 ha)	Jack Pine (74 ha)	Balsam Fir (13 ha)	Cedar (22 ha)	Wetland (22 ha)	Clearcut (9.3 ha)	Mixed Hardwood (2.9)	Larch (1.3 ha)	Total
Nashville Warbler	56.7	30.2	15.0	38.8	2.4	6.9	11.5	1.8	0.9	1.2	**165.5**
Magnolia Warbler	43.2	38.2	25.8	8.3	3.2	3.5	5.2	3.6	0.0	1.2	**132.2**
Yellow-rumped Warbler	40.2	22.1	0.0	19.4	0.8	4.3	0.0	0.6	0.0	0.8	**88.3**
Red-eyed Vireo	13.4	30.2	12.9	2.7	3.2	2.6	2.1	1.2	0.9	1.2	**70.4**
Ovenbird	10.5	24.1	15.0	8.3	0.8	1.7	0.0	0.0	0.9	0.0	**61.4**
Golden-crowned Kinglet	26.9	16.1	4.3	2.7	0.0	0.9	0.0	0.0	1.8	0.0	**52.7**
Black-throated Blue Warbler	10.5	20.2	8.6	2.7	1.6	1.7	0.0	0.0	0.9	0.0	**46.2**
White-throated Sparrow	10.5	12.1	4.3	5.6	0.8	1.7	8.4	2.4	0.0	0.4	**46.2**
Black-capped Chickadee	17.9	6.1	6.4	5.6	0.0	2.6	0.0	0.6	0.9	0.0	**40.0**
Winter Wren	9.0	20.2	4.3	0.0	0.0	1.7	2.1	1.2	0.9	0.0	**39.4**
Ruby-crowned Kinglet	19.5	6.1	8.6	0.0	0.0	0.9	2.1	0.0	0.0	1.7	**38.7**
Northern Parula	8.9	14.1	6.4	0.0	0.8	4.3	0.0	1.2	0.0	0.0	**35.8**
Blackburnian Warbler	9.0	8.0	4.3	0.0	1.6	1.7	0.0	0.6	0.9	0.0	**26.2**
Red-breasted Nuthatch	10.4	8.0	2.1	0.0	0.0	1.7	1.1	0.0	0.9	0.4	**24.7**
Black-and-white Warbler	6.0	6.1	10.7	0.0	0.0	0.9	0.0	0.0	0.9	0.0	**24.6**
Yellow-bellied Flycatcher	11.9	2.0	0.0	0.0	0.0	4.3	4.2	0.0	0.0	0.4	**22.8**
Swainson's Thrush	7.5	10.0	4.3	0.0	0.8	0.0	0.0	0.0	0.0	0.0	**22.6**
Black-throated Green Warbler	3.0	10.0	2.1	0.0	0.0	3.5	0.0	0.0	0.9	0.0	**19.5**
Yellow-bellied Sapsucker	3.0	4.1	8.6	0.0	0.8	1.7	0.0	0.0	0.0	0.4	**18.7**
Blue-headed Vireo	6.0	4.1	2.1	0.0	0.8	1.7	1.0	0.0	0.0	0.4	**16.2**
American Redstart	0.0	8.0	4.3	2.7	0.0	0.9	0.0	0.0	0.0	0.0	**15.9**
Chestnut-sided Warbler	1.5	2.0	6.4	0.0	0.0	0.9	0.0	3.0	0.0	0.0	**13.7**
Least Flycatcher	3.0	8.0	2.1	0.0	0.0	0.0	0.0	0.0	0.0	0.4	**13.6**
Hermit Thrush	3.0	2.0	2.1	5.6	0.0	0.0	0.0	0.0	0.0	0.4	**13.1**
Mourning Warbler	1.5	4.1	4.3	0.0	0.8	0.0	0.0	1.8	0.0	0.0	**12.5**
Common Yellowthroat	1.5	2.0	0.0	0.0	0.0	0.0	8.4	0.0	0.0	0.0	**11.9**

Common Name	Spruce (197 ha)	White Birch (151 ha)	Trembling Aspen (88 ha)	Jack Pine (74 ha)	Balsam Fir (13 ha)	Cedar (22 ha)	Wetland (22 ha)	Clearcut (9.3 ha)	Mixed Hardwood (2.9)	Larch (1.3 ha)	Total
Downy Woodpecker	1.5	4.1	2.1	0.0	0.0	0.9	0.0	0.0	0.9	0.0	**9.5**
Ruffed Grouse	1.5	4.1	0.0	2.7	0.8	0.0	0.0	0.0	0.0	0.0	**9.1**
Brown Creeper	3.0	4.1	0.0	0.0	0.0	0.9	0.0	0.0	0.9	0.0	**8.9**
Swamp Sparrow	4.4	0.0	0.0	0.0	0.0	0.0	4.2	0.0	0.0	0.0	**8.6**
American Robin	1.5	0.0	2.1	2.7	0.0	0.0	0.0	1.2	0.0	0.0	**7.5**
Boreal Chickadee	7.5	0.0	0.0	0.0	0.0	0.0	0.0	0.0	0.0	0.0	**7.5**
Hairy Woodpecker	3.0	2.0	2.1	0.0	0.0	0.0	0.0	0.0	0.0	0.0	**7.1**
Blue Jay	1.5	4.1	0.0	0.0	0.0	0.9	0.0	0.0	0.0	0.0	**6.4**
Veery	0.0	4.1	0.0	0.0	0.0	0.0	0.0	0.0	0.0	0.0	**4.1**
Bay-breasted Warbler	1.5	2.0	0.0	0.0	0.0	0.0	0.0	0.0	0.0	0.0	**3.5**
Chipping Sparrow	0.0	0.0	0.0	2.7	0.0	0.0	0.0	0.0	0.0	0.0	**2.7**
Dark-eyed Junco	0.0	0.0	0.0	2.7	0.0	0.0	0.0	0.0	0.0	0.0	**2.7**
Alder Flycatcher	1.5	0.0	0.0	0.0	0.0	0.0	1.1	0.0	0.0	0.0	**2.6**
Cape May Warbler	1.5	0.0	0.0	0.0	0.0	0.9	0.0	0.0	0.0	0.0	**2.3**
Canada Warbler	0.0	0.0	2.1	0.0	0.0	0.0	0.0	0.0	0.0	0.0	**2.1**
Philadelphia Vireo	0.0	0.0	2.1	0.0	0.0	0.0	0.0	0.0	0.0	0.0	**2.1**
Pileated Woodpecker	0.0	2.0	0.0	0.0	0.0	0.0	0.0	0.0	0.0	0.0	**2.0**
Woodpecker sp	0.0	2.0	0.0	0.0	0.0	0.0	0.0	0.0	0.0	0.0	**2.0**
American Crow	1.5	0.0	0.0	0.0	0.0	0.0	0.0	0.0	0.0	0.0	**1.5**
Palm Warbler	1.5	0.0	0.0	0.0	0.0	0.0	0.0	0.0	0.0	0.0	**1.5**
Purple Finch	1.5	0.0	0.0	0.0	0.0	0.0	0.0	0.0	0.0	0.0	**1.5**
Olive-sided Flycatcher	1.5	0.0	0.0	0.0	0.0	0.0	0.0	0.0	0.0	0.0	**1.5**
Spruce Grouse	1.5	0.0	0.0	0.0	0.0	0.0	0.0	0.0	0.0	0.0	**1.5**
Cedar Waxwing	0.0	0.0	0.0	0.0	0.0	0.0	1.1	0.0	0.0	0.0	**1.1**
Gray Jay	0.0	0.0	0.0	0.0	0.0	0.0	1.1	0.0	0.0	0.0	**1.1**
Orange-crowned Warbler	0.0	0.0	0.0	0.0	0.0	0.0	1.1	0.0	0.0	0.0	**1.1**
Black-backed Woodpecker	0.0	0.0	0.0	0.0	0.0	0.0	1.0	0.0	0.0	0.0	**1.0**

Common Name	Spruce (197 ha)	White Birch (151 ha)	Trembling Aspen (88 ha)	Jack Pine (74 ha)	Balsam Fir (13 ha)	Cedar (22 ha)	Wetland (22 ha)	Clearcut (9.3 ha)	Mixed Hardwood (2.9)	Larch (1.3 ha)	Total
Bufflehead	0.0	0.0	0.0	0.0	0.0	0.0	1.0	0.0	0.0	0.0	**1.0**
Ruby-throated Hummingbird	0.0	0.0	0.0	0.0	0.8	0.0	0.0	0.0	0.0	0.0	**0.8**
Broad-winged Hawk	0.0	0.0	0.0	0.0	0.0	0.0	0.0	0.6	0.0	0.0	**0.6**
Total	**370.3**	**346.3**	**175.4**	**113.4**	**20.0**	**53.9**	**56.7**	**19.5**	**12.9**	**9.1**	**1,177.6**

It is assumed that all waterbodies and wetlands will be fully spanned and as such there will be no direct footprint of the TLA within watercourses or wetlands. Therefore, no aquatic or wetland habitat will be directly affected (lost) from the construction of the Cross-Country TLA. There is the potential for waterbodies, watercourses and wetlands located adjacent to Project activities to be indirectly affected through sedimentation during construction (during forest clearing). However, this can be minimized by implementing various mitigation measures discussed below.

Some species are not expected to be overly sensitive to human presence or temporary heavy equipment usage. Other species may be temporarily affected by noise effects and other disturbance related to construction activities. Construction activities may cause a local displacement of sensitive species but these species are likely to return after construction activities cease, if the habitat remains appropriate. As an existing ROW is present along the initial 45.9 km of the proposed Cross-Country TLA, most local species would be expected to have adapted to the local setting. Therefore, the expansion of the Cross-Country ROW by 45 m is not expected to have an appreciable effect on species diversity, density or behaviour along the initial 45.9 km on completion of construction. The more open terrain and increased edge may pose a slightly increased risk to certain species from predators such as raptors and foxes; it may also offer increased foraging opportunities for some species (such as raptor species and Eastern Whip-poor-will).

The remaining 71.5 km of the Cross-Country TLA will involve clearing of forested areas and may result in large impacts to interior species. However, several areas along the remaining 71.5 km have been disturbed by logging. Large tracks of uncut forest are more likely to contain mature interior forest, comprised of a greater diversity of plant and wildlife species compared to small isolated woodlands and also provide interior woodland habitat to woodland area sensitive species. However, habitat fragmentation and the loss of interior woodland habitat along the Cross-Country TLA will be minimal due to the presence several clearcuts, replanted areas from past logging activities and a large regenerating area that experienced a recent forest fire. Furthermore, the continued presence of large tracts of interior forest habitat throughout the regional study area moderates the adverse effects caused by construction activities.

The permanent displacement of some birds due to clearing activities will occur concurrently with the loss of those areas comprising their habitat. Wooded habitat and vegetation communities along the proposed TLA for example, will be replaced by herbaceous and shrub communities following construction. Woodland area sensitive breeding birds are diverse and abundant in the local study area with a total of 25 species recorded during the 2013 breeding bird surveys (see Appendix I).

Adverse effects to woodland area sensitive breeding bird populations within the local study area will be largely associated with direct habitat loss from forest clearing, potentially coupled with changes to habitat suitability related to the production of edge effects (such as changes in tree cover, soil moisture, composition of vegetation and increased predation levels from predators

that travel along linear corridors) and temporary sound and dust production during construction of the TLA. Sound and dust emissions will be greatest in areas of concentrated heavy equipment operation (during vegetation clearing and TLA construction). Sound can cause adverse effects on birds in a variety of ways including masking important communication signals, loss of the ability to hear important behavioural triggers such as the songs of territorial males, calls of females, begging calls of nestlings, approaching predators, or the presence of prey items. As a result, long-term noise disturbance can decrease breeding success or bird density in an chronically noisy habitat. The production of noise during construction of the TLA is expected to be temporary and will take place during the winter months when migratory bird species are not present.

Most bird species will be able to avoid these effects by moving to adjacent areas of similar habitat and will not be affected appreciably by construction of the TLA. Further, as indicated above, linear corridors may provide habitat that is preferred by some species for nesting and foraging.

The removal of habitat due to clearing activities could also result in the potential loss of portions of SWH. The records review and field surveys for this Project indicated that the following avian SWH occur or could occur within the Cross-Country TLA local study area and regional study area:

- one type of migratory bird SWH in the form of Seasonal Concentration Areas of Animals (Waterfowl Stopover and Staging Areas: Aquatic);
- three types of avian SWH in the form of Specialized Habitat for Wildlife (Waterfowl Nesting Areas, Bald Eagle and Osprey Nesting Habitat and Woodland Raptor Nesting Habitat); and
- one type of migratory bird SWH in the form of Habitat for Species of Conservation Concern (Special Concern and Rare Wildlife Species).

Waterfowl Stopover and Staging Areas (Aquatic) are not expected to be directly affected by construction of the Cross-Country TLA as it is assumed that all waterbodies and wetlands will be fully spanned by the TLA wires and as such there will be no TLA infrastructure within waterbodies or wetlands.

Marsh bird species were not observed within the local study area and therefore, the density and diversity of indicator species for any single wetland feature did not meet the MNR criteria of SWH (Marsh Breeding Bird Habitat) as defined in the SWH 3E Ecoregion Criteria Schedules (MNR, 2012). Marsh habitat exists within the local study area but is not expected to be directly affected by the construction, operation or closure of the Cross-Country TLA as it is assumed that all waterbodies and wetlands will be fully spanned and as such there will be no direct footprint of the TLA within the watercourses or wetlands. However, there is the potential for waterbodies, wetlands and watercourses located adjacent to Project activities to be indirectly

affected by sedimentation during construction (during forest clearing). It should be noted that waterfowl (wild ducks, geese and swans), cranes, rails, bitterns, wrens, terns and most other marsh breeding birds are protected under the Migratory Birds Convention Act.

The NHIC Natural Areas Database did not identify any areas within the regional study area as having significant or unique natural heritage features pertaining to migratory bird species. No Important Bird Areas or nature reserves were identified within the Cross-Country local study area or regional study area. In addition, the MNR's Land Information Ontario (LIO) database did not identify any Provincially Significant Wetlands within the regional study area.

There is some potential for increased road kills along the access roads and to a lesser extent along the ROW itself during regular maintenance activities by service vehicles, but this effect is considered to be limited because of the low traffic volumes and frequency expected, and reduced traveling speeds to ensure construction crew safety along the ROW. As the existing ROW along the Cross-Country route has a number of all-season road accesses already and no significant accesses are proposed, there would be no new corridor access that would increase traffic volume or hunting pressures.

Mitigation measures that will be used to reduce potential adverse effects to birds during the TLA construction phase will include the following:

- minimize the TLA footprint to the extent practicable;
- remove TLA infrastructure in the winter to avoid sensitive wildlife breeding seasons such as the migratory bird nesting season, where applicable;
- maintain existing vegetation ground cover to the extent practicable;
- conductor wire separation distances will be sufficiently far apart to preclude larger avian species, particularly species such as ducks, geese, herons and cranes that fly in flocks, from electrocution by contacting two conductor wires simultaneously;
- utilize existing infrastructure for access and avoid constructing new roads and other corridors where other alternatives exist;
- construction crews will be advised not to interfere or harass wildlife. No hunting by construction crews will be allowed. Disciplinary actions will be taken should either occur; and
- contractors will be required to handle food and food wastes in a responsible manner and to workers will be educated and policies enforced to ensure no feeding of wildlife.

Major tree clearing efforts will be avoided during the breeding bird season. There is currently no permit for incidental take of migratory bird nests/eggs and/or individuals but most species listed in Tables 4-4 and 4-5 are protected under the MBCA which means that habitat with nests cannot be destroyed until the fledgling birds have left the nest. For some species, the Ontario

songbird nesting season is generally understood to start in late May and extend until July 31 (Cadman et al., 2007).

As such, tree clearing should generally be undertaken from August 1 to April 1 to avoid disrupting any species during their nesting season as is required under the MBCA. However, consultation with the MNR and EC should be undertaken prior to clearing activities to confirm seasonal restrictions. If tree clearing must be undertaken between the months of April and August, surveys should be conducted to confirm nesting activity prior to tree clearing activities. Should nesting sites be located within these areas, appropriate avoidance buffer areas around active nests would be required until the young have left the nest on their own accord. Appropriate buffers will vary depending on the species and should be implemented based on consultation with the MNR and EC.

Migratory bird SAR are discussed in more detail below.

4.1.8 Raptors

Raptor species recorded along the proposed Cross-Country TLA local study area included Bald Eagle, Osprey, Sharp-shinned Hawk, Broad-winged Hawk, Merlin, American Kestrel, Northern Harrier, Barred Owl, Northern Saw-whet Owl and Common Raven (see Appendix I). Six stick nests were located across the local study area of which two were confirmed to be active. One active Sharp-shinned Hawk nest and one active Common Raven nest were located within the local study area east of the existing ROW. Three inactive unidentified hawk nests and one inactive Osprey (or Bald Eagle) nest were also observed. Two additional nests were located within the regional study area and included one active Bald Eagle nest and one inactive Osprey nest. The active Bald Eagle nest was located within the proposed footprint for the mine site. Effects and mitigations specific to this nest are discussed in the Project Site Wildlife TSD.

Vegetation clearing for construction of the Cross-Country TLA is anticipated to remove 403.2 ha of forested land capable of providing woodland raptors nesting habitat. No raptor nests are located within the proposed Cross-Country TLA footprint and it is not expected that habitat removal will affect known raptor nests through habitat removal. It is still possible that unknown nests may be present, especially for smaller raptor species or cavity-nesting species. Project-related habitat loss would therefore be expected to adversely affect raptor species to a small degree.

Little research has been done into the sensitivity of Sharp-shinned Hawks to human disturbance. This species will respond aggressively towards humans approaching their nests, but lasting effects of this disturbance has not been quantified (Bildstein and Meyer, 2000). However, there is some evidence that nests checks by researchers do not lead to nest failures (Bildstein and Meyer, 2000). This species is one of a few that have adapted successfully to living in urban habitats (Coleman et al., 2002) suggesting it has a higher tolerance for human disturbance than other raptor species. There has not been a change in the probability of

observation in Ontario between the first and second OBBAs (Cadman et al., 2007) and this species has shown a modest population increase trend between 1966 and 2011 in the Boreal Hardwood Transition region (Sauer et al., 2002).

Direct disturbance to Common Raven nests is of much greater concern than habitat changes (Boarman and Heinrich, 1999). Ravens commonly colonize disturbed areas and it is believed that anthropogenic degradation of natural habitat may benefit Common Ravens (Boarman, 1993).

Motor vehicle collisions are listed as the top means of human-caused mortality of Sharp-shinned Hawks (Bildstein and Meyer, 2000) are also a serious risk for Common Ravens which scavenge road-killed animals. Vehicular traffic along the proposed Cross-Country TLA and nearby Highway 144 is not expected to increase dramatically or permanently as a result of TLA installation. As a result, risk of vehicular collisions with these species is not anticipated to rise.

The following mitigation measures will be implemented to minimize potential adverse effects to raptors and ravens:

- development of a compact Project site to prevent encroachment of Project activities on nesting sites and adjacent habitat;
- inclusion of wildlife awareness information into regular safety and environmental inductions performed by the mine. Wildlife sighting logs or information boards will available to notify workers of local observations. Workers will be made aware of seasonal changes in local animal behaviour or presence in proximity to the TLA during construction;
- minimizing the level of potentially disturbing activities near any known or subsequently discovered active nest sites until the nest is vacated;
- enforcement of speed limits along proposed mine access roads to reduce the potential adverse effects of increased vehicular traffic associated with the Project. Signs warning drivers of the possibility of wildlife encounters will be posted in areas of high wildlife activity;
- disposing of food wastes generated on site in an appropriate manner that limits the attraction of wildlife, including Common Ravens, Turkey Vultures and Bald Eagles; and
- timely removal of carcasses of road-killed animals or any other carcasses found onsite to limit the attraction of wildlife, such as Common Ravens and Turkey Vultures.

In the event that future raptor nesting is observed within or in proximity to the TLA footprint, an acceptable buffer defined in the *Forest Management Guide for Conserving Biodiversity at the Stand and Site Scales* (MNR, 2010) will be observed until breeding activities have ended and

the nesting site has been abandoned. Workers will be made aware of locally nesting raptors to avoid unnecessary disturbance.

Mitigation measures described in this section are expected to be effective for their intended purposes and in many instances can be further optimized in response to monitoring data.

4.1.9 Species of Special Concern and Provincially Rare Species

4.1.9.1 Effects of Habitat Loss and Fragmentation

Vegetation clearing will result in the loss of habitat for species of Species Concern within the Cross-Country TLA. Effects to Canada Warbler, Common Nighthawk, Olive-sided Flycatcher, Rusty Flycatcher and Snapping Turtle are summarized in Table 4-7 below.

Table 4-7: Habitat Type Preferences and Amount of Habitat Lost for Species of Special Concern Occurring within the Cross-Country TLA

Species	Habitat Type Preferences	Habitat Types Present	Amount of Habitat Types Lost
Canada Warbler	• This species breeds in wet mixed deciduous-coniferous forest with a well developed shrub layer, shrub marshes, ravines, steep brushy slopes and upland forests with canopy gaps that promote a well-developed shrub layer. Also breeds in riparian shrub forests on slopes and ravines, old-growth forests with canopy openings and a high density of shrubs and in stands regenerating after disturbances such as forest fires or logging (Conway 1999, Lambert and Faccio 2005, COSEWIC 2008b).	Deciduous and Mixed Forest	233 ha (317 ha)
Common Nighthawk	• This species nests in a wide range of open, vegetation free habitats including sand dunes, beaches, recently harvested forests, burnt areas, logged areas, rocky outcrops, rocky barrens, grasslands, pastures, peat bogs, marshes, lakeshores, river banks and mixed and coniferous forests (Environment Canada, 2013). Common Nighthawk breeding habitat is likely uncommon within the majority of the Shining Tree and Cross-Country TLA local study areas due to the high level of forested land characterized by dense understory and ground cover. Clearcuts occur along both TLAs, though some clearcut lands have been overgrown by aspen and birch regeneration. • Common Nighthawks are also known to occur in close proximity to humans and have been observed nesting on manmade structures such as rooftops, quarries and pathways and are commonly observed flying over urban environments such as downtown Toronto. High densities of nighthawks are known to persist in proximity to large mining projects where suitable nesting habitat is available. • Despite an apparent lack of Common Nighthawk nesting habitat within the Shining Tree and Cross-Country local study areas, these areas provide foraging opportunities for local nighthawks including wetlands, watercourses, and lakes along the existing Shining Tree ROW.	Upland Forest Shallow-soiled Forest Jack Pine regeneration	403 ha 0 ha 0 ha

Species	Habitat Type Preferences	Habitat Types Present	Amount of Habitat Types Lost
Olive-sided Flycatcher	• Occur in natural forest openings, wetlands, forest edges and human-made openings such as clearcuts (Altman and Sallabanks 2000). In boreal Canada, this species commonly occurs in open habitat of muskegs, bogs and swamps dominated by spruce and tamarack (Erskine 1977).	Wetland Coniferous Swamp	22.9 ha 146 ha
Rusty Blackbird	• Rusty Blackbirds inhabit wet coniferous and mixed forests, fens, alder– willow bogs, muskegs, beaver ponds, spruce–sphagnum bogs and swamps, particularly along edges of forest openings and swampy shores along lakes and streams (Avery, 1995). Spruce-sphagnum forests and bogs are widespread throughout the study area and streams are also present.	Wetland Coniferous Swamp	22.9 ha 146 ha
Snapping Turtle	• The preferred aquatic habitat for the Snapping Turtle is characterized by soft, muddy bottoms with slow moving shallow water. Overwintering occurs in deep mud under continuously flowing water or in marsh areas. The local study area includes river, creek, pond and wetland habitat that may provide suitable habitat for these turtles.	Open Water Wetland	3.8 ha 22.6 ha

Canada Warbler

Five Canada Warblers were recorded at four locations along the Cross-Country TLA where wet, mixed forest is uncommon. Expected direct habitat loss for this species as a result of implementation of the proposed Cross-Country TLA is summarized in Table 4-7. The Ontario Landbird Conservation Plan for the Boreal Hardwood Transition has established a population objective of maintaining at least the current abundance and distribution levels for Canada Warbler in Ontario BCR 12 (PIF, 2008). This species is considered of high concern and stewardship responsibility at both the continental (Rich et al., 2004) and the ON BCR 12 level (PIF, 2008). BCR 12 is expected to provide breeding habitat to 23% of this species' global population (PIF, 2008).

This species exhibits a strong positive relationship between abundance and forest area (Robbins et al., 1989) and thus fragmentation caused by cutting a new TLA corridor may further reduce habitat suitability in the Cross-Country regional study area through loss of interior forest habitat. MNR (2012) considers interior forest habitat to begin 200 m from the forest edge.

Common Nighthawk

One Common Nighthawk was recorded at a single location along the Cross-Country TLA during baseline inventories (see Appendix I). Expected habitat loss for this species as a result of implementation of the proposed Cross-Country TLA is summarized in Table 4-7.

BCR 12 is expected to provide breeding habitat to <1% of this species' global population (PIF 2008). Due to the low importance of this region to provincial and global populations of this

species, the association of this species with clearcuts and other corridors in proximity to the Cross-Country local study area and the low quality of habitat within the local study area, removal of possible Common Nighthawk habitat is not expected to greatly affect this species.

Olive-sided Flycatcher

Olive-sided Flycatcher was located at a single location along the Cross-Country TLA (see Appendix I). This observation occurred within a clearcut. Expected habitat loss for this species as a result of implementation of the proposed Cross-Country TLA is summarized in Table 4-7.

Ontario BCR 12 is expected to provide breeding habitat to 1% of this species' global population (PIF, 2008). Due to the low importance of this region to provincial and global populations of this species, the association of this species with clearcuts and other corridors in proximity to the Cross-Country local study area and the low quality of habitat within the local study area, removal of possible Olive-sided Flycatcher habitat is not expected to affect this species.

Rusty Blackbird

One Rusty Blackbird was observed at a single location along the Cross-Country local study area (see Appendix I). Expected habitat loss for this species as a result of implementation of the proposed Cross-Country TLA is summarized in Table 4-7.

Snapping Turtle

One Snapping Turtle was observed crossing Highway 144 near La Motte Lake Provincial Park. This location is in proximity to the Cross-Country TLA regional study area. It is anticipated that the presence of this turtle is indicative of a local population that inhabits the vast network of lakes, streams and wetlands in the area. No Snapping Turtle nests or nesting habitat were observed in the local study area for Cross-Country TLA.

The life strategy of the Snapping Turtle is characterized by extended longevity (long term data from Algonquin Park suggests a maximum age of over 100) and delayed sexual maturity (mature at 15 to 20 years of age; COSEWIC, 2008a). Therefore, Snapping Turtle populations can be greatly affected by the premature death of individual turtles and do not recover quickly from population declines. Loss of habitat, road mortality, nest predation and environmental contamination are long term threats to the persistence of the Snapping Turtle population in Ontario.

Expected habitat loss for this species as a result of construction of the proposed Cross-Country TLA is summarized in Table 4-7.

4.1.9.2 Effects of Sound

Sound generated by Côté Gold Project activities may negatively affect the way an animal interacts with its environment and with other individuals. Where local population density is low, or where a single breeding pair exists, the effects of sound masking can decrease breeding success by impairing the perception of behavioural triggers such as calls of females, begging calls of nestlings and approaching predators.

As crepuscular birds, Common Nighthawks depend on auditory cues for intraspecific interactions and during foraging at night. Individual territories are defined by calling birds as breeding males attract prospective females through aerial breeding displays. However, sound disturbance at the proposed transmission line corridor will be limited to short periods of time during daylight in the construction and decommissioning phases. Therefore, the effects of Project-related noise on this species are expected to be negligible.

4.1.9.3 Effects of Roadways and Vehicular Traffic

Collisions with vehicles and human-built structures represent one of the largest sources of human caused mortality of songbirds. Increased vehicular traffic within the local study area may cause an increase in vehicular collisions with wildlife in the local study area.

Canada Warblers are area sensitive species and thus have an affinity for large tracts of habitat. As a result, this species has a low risk of mortality due to collisions with vehicles along roadways. Any increase in vehicular traffic due to the Côté Gold Project is unlikely to affect this species.

Common Nighthawks commonly roost on gravel roads (Poulin et al., 1998) and therefore have a high risk of mortality due to collisions with vehicles. Foraging individuals or displaying males are also at risk of colliding with vehicles (Stevenson and Anderson 1994).

Little data exists on the effects of roadways and vehicular traffic for Olive-sided Flycatchers and Rusty Blackbirds. Given the propensity of these species to inhabit wetlands and open, disturbed habitats, these species are not expected to occur close to active roadways.

Snapping Turtles are known to cross roads while travelling to or from various habitat features and may use gravel or sand-based roadsides as nesting sites. Côté Gold Project activities may slightly increase vehicular traffic within the regional area and may result in an increase in collisions with Snapping Turtles or other turtle species where roadways cross waterbodies or watercourses.

4.1.9.4 Effects of Predator Attraction

There is also the potential for site activities to attract wildlife that tend to scavenge domestic waste which may lead to increased turtle nest predation, as well as predation of Snapping Turtle hatchlings and adults. Nest predation by Raccoons and other mammals is a long term threat to the persistence of the Snapping Turtle (COSEWIC, 2008a).

Mitigation measures that will be used to reduce potential adverse effects to all species of special concern and provincially rare species will include the following:

- development of a compact Project site to reduce overall habitat loss and to limit potential interference with wildlife of movement, as well as to limit sound emissions, to the extent practicable;
- restriction of principal habitat displacement for mine infrastructure to periods outside the breeding bird season which MNR has indicated occurs from May 1 to July 31;
- undertake TLA construction during the daytime, thus limiting sound or light disturbance to breeding or foraging Common Nighthawks and Snapping Turtles;
- enforcement of speed limits along mine controlled roads to reduce the potential for adverse effects of increased vehicular traffic associated with the Côté Gold Project. Signs warning drivers of the possibility of wildlife encounters will be posted in areas of high wildlife activity;
- inclusion of wildlife awareness information into regular safety inductions performed by the mine. Workers will be made aware of seasonal changes in wildlife behaviour or presence in proximity to the mine; and
- disposing of food wastes generated on site will be by a means that limits the attraction of wildlife to the mine site.

Mitigation measures described in this section are expected to be effective for their intended purposes and in many instances can be further optimized in response to monitoring data.

4.2 Operations Phase

4.2.1 Vegetation Communities

Limited effects on terrestrial habitat have been identified for the operations phase. It is anticipated that periodic clearing of tall woody vegetation will be required to ensure adequate clearance below the conductors. This clearing will be completed either mechanically or manually, depending on the individual location and consultation activities and will not use herbicide application. Industry standard techniques will be used to ensure that the effect is constrained to the necessary area of clearance.

The routine maintenance of the TLA wires and poles will require service vehicles to travel along service roads and the TLA. The generation of dust by these vehicles is expected to be limited and can be minimized by having these vehicles drive slowly (i.e. 30 km/hr or less), particularly along the TLA.

Since effects on terrestrial habitat for the operations phase are expected to be minimal, no further mitigation measure are proposed.

4.2.2 Ungulates – Moose

The operating transmission line itself does not pose any potential effects to Moose. Minor interference with Moose may occur related to vehicle movements associated with periodic inspections and minor maintenance of TLA infrastructure; however it is not anticipated that this is a concern.

Mitigation strategies for limiting adverse effects to Moose occurring within the local study area during the operations phase include:

- construction crews will be advised not to interfere or harass wildlife. No hunting by construction crews will be allowed. Disciplinary actions will be taken should either occur;
- enforcement of speed limits along proposed access roads to reduce the potential for collisions with wildlife. Signs warning drivers of the possibility of wildlife encounters will be posted in areas of high wildlife activity;
- inclusion of wildlife awareness information into regular safety and environmental inductions. Workers and contractors will be made aware of seasonal changes in local deer or large mammal behaviour or presence; and
- contractors will be required to handle food and food wastes in a responsible manner and to workers will be educated and policies enforced to ensure no feeding of wildlife.

4.2.3 Furbearers – Wolves

Operating the TLA itself does not pose any potential effects to wolves. Minor interference with wolves may occur related to vehicle movements associated with periodic inspections and minor maintenance of TLA infrastructure; however it is not anticipated that this is a concern. Once the TLA is in operations mode, noise from the TLA is expected to be minimal and not a disturbance to local wildlife. Increased recreational activities such as snowmobiling are not anticipated to increase significantly with the ROW expansion in the northern portion of the TLA; noise levels due to these activities are expected to remain comparable to existing levels. However there is a potential for increased access by hunters, trappers and recreational users due to the creation additional access roads and the ROW. Increased levels of trapping or hunting can negatively affect local wolf population through increased mortality rates and increased noise from recreational use can displace wolves as well as their prey.

Mitigation strategies for limiting adverse effects to wolves occurring within the local and regional study area during the operations phase include:

- construction crews will be advised not to interfere or harass wildlife. No hunting by construction crews will be allowed. Disciplinary actions will be taken should either occur;
- enforcement of speed limits along proposed access roads to reduce the potential for collisions with wildlife. Signs warning drivers of the possibility of wildlife encounters will be posted in areas of high wildlife activity;
- inclusion of wildlife awareness information into regular safety and environmental inductions. Workers and contractors will be made aware of seasonal changes in large mammal behaviour or presence; and
- contractors will be required to handle food and food wastes in a responsible manner and to workers will be educated and policies enforced to ensure no feeding of wildlife.

4.2.4 Furbearers – American Marten

Operating the TLA itself does not pose any potential effects to marten. Minor interference with wildlife may occur related to vehicle movements associated with periodic inspections and minor maintenance of TLA infrastructure; however it is not anticipated that this is a concern. Once the TLA is in operations mode, noise from the TLA is expected to be minimal and not a disturbance to local wildlife. Increased recreational activities such as snowmobiling are not anticipated to increase significantly with ROW expansion; noise levels are expected to remain comparable to existing levels experienced along the ROW from these activities. Increased noise and disturbance from humans may occur along the new ROW. There is also a potential for increased access by trappers due to the creation of additional access roads and the new ROW. Increased levels of trapping have the potential to negatively affect local marten populations through increased human - induced mortality rates.

Mitigation strategies for limiting adverse effects to marten occurring within the local and regional study area during the operations phase include:

- construction crews will be advised not to interfere or harass wildlife. No hunting by construction crews will be allowed. Disciplinary actions will be taken should either occur;
- enforcement of speed limits along proposed access roads to reduce the potential for collisions with wildlife. Signs warning drivers of the possibility of wildlife encounters will be posted in areas of high wildlife activity;
- inclusion of wildlife awareness information into regular safety and environmental inductions. Workers and contractors will be made aware of seasonal changes in large mammal behaviour or presence; and
- contractors will be required to handle food and food wastes in a responsible manner and to workers will be educated and policies enforced to ensure no feeding of wildlife.

4.2.5 Furbearers – Black Bear

Operating the TLA itself does not pose any potential effects to Black Bears. Minor interference may occur related to vehicle movements associated with periodic inspections and minor maintenance of TLA infrastructure, however, it is not anticipated that this is a concern. Once the TLA is in operations mode, noise from the TLA is expected to be minimal and not a disturbance to local wildlife. Increased recreational activities such as snowmobiling are not anticipated to increase significantly with the ROW expansion in the northern portion of the TLA and noise levels due to these activities are expected to remain comparable to existing levels. However there is a potential for increased access by hunters, trappers and recreational users due to the creation additional access roads and the ROW. Increased levels of trapping or hunting can negatively affect local populations through increased mortality rates.

Mitigation strategies for limiting adverse effects to Black Bears occurring within the local and regional study area during the operations phase include:

- construction crews will be advised not to interfere or harass wildlife. No hunting by construction crews will be allowed. Disciplinary actions will be taken should either occur;
- enforcement of speed limits along proposed access roads to reduce the potential for collisions with wildlife. Signs warning drivers of the possibility of wildlife encounters will be posted in areas of high wildlife activity;
- inclusion of wildlife awareness information into regular safety and environmental inductions. Workers and contractors will be made aware of seasonal changes in large mammal behaviour or presence; and
- contractors will be required to handle food and food wastes in a responsible manner and to workers will be educated and policies enforced to ensure no feeding of wildlife.

4.2.6 Bats

Operation of the Cross-Country TLA is not expected to have an appreciable effect on bat roosting habitat or behaviour (i.e. reproductive output) following the completion of construction. Minor interference may occur related to vehicle movements associated with periodic inspections and minor maintenance of TLA infrastructure. The introduction of a novel corridor across the landscape may provide additional foraging area for local bats in the form of woodland edge, though the productivity of the ROW is unlikely to match that of naturally occurring foraging habitat in the form of wetlands or forest openings. Periodic clearing of the ROW may further limit the insect productivity of potential foraging habitat.

Transmission line towers and power lines are not expected to negatively affect bats both over land and over water. Little evidence indicates that bat populations experience mortality via collisions with towers or electrocutions. Nicholls and Racey (2007) indicate that bats may avoid electromagnetic fields emitted by military radar installations though further study has been limited and has not included electromagnetic fields produced by power lines.

Mitigation measures that will be used to reduce potential adverse effects to bats during the Cross-Country TLA operation phase will include minimizing the speed of service vehicles along service roads and the TLA to lessen dust production and limit the zone of influence.

4.2.7 Migratory Birds

Limited Project activity is expected to occur during the Cross-Country operations phase. Operation of the TLA is not expected to have an appreciable effect on bird densities or behaviour (i.e. reproductive output) following the completion of construction. Minor interference may occur related to vehicle movements associated with periodic inspections and minor maintenance of TLA infrastructure. Periodic clearing of the ROW may cause relocation of species that prefer early successional vegetation.

The creation of a forest opening and introduction of large structures will likely invite colonization by disturbance tolerant predators such as Red-tailed Hawks and Common Ravens as well as parasitic bird species such as Brown-headed Cowbirds and European Starlings. The introduction or population increase of these species will likely contribute to increased predation and reduced breeding success and would thus result in negative edge effects.

Power line strikes and electrocutions are a major source of bird mortalities. A wide variety of birds are susceptible to power line strikes. Large, less manoeuvrable species are more prone to power line collisions (Huckabee 1993) and young birds are more likely to strike powerlines than adult birds (Manville, 2005). In the case of the Cross-Country TLA, species at greater risk of collisions include Great Blue Herons, Sandhill Cranes and waterfowl. The combination of new lines spanning sections of Lake Kenogamissi will add additional risk to birds avoiding the current transmission line spanning this waterbody.

While tower collisions are a known source of significant mortality to migrating birds, particularly passerines, is it not anticipated that the towers used for the Cross-Country TLA will cause significant effects. Taller towers (especially those exceeding 300 m) and those illuminated with solid or pulsating incandescent red lights or stabilized by guy wires have increased likelihood (Manville, 2005). Towers positioned near wetlands, along major songbird migration pathways or corridors and in areas with a history of inclement weather during spring and fall migrations are also likely to experience increased bird mortality (Manville, 2005). H-frame wooden structure poles 18.3 to 22.3 m in height would be predominantly used along the Cross-Country TLA with limited use of dead-end steel towers measuring 70 m. At a height of 18.3 to 22.3 m, the majority of the TLA would be at or near tree-top level. As such, tower and line level would be well below the height of the existing 115 kV line. Towers will not be lit and guy wires will only be required for the 70 m dead end poles. Little research has been conducted on collisions of birds with short towers, though risk of avian collision with such structures is considered low.

Mitigation measures that will be used to reduce potential adverse effects to birds during the TLA operation phase will include the following:

- minimize the speed of service vehicles along service roads and the TLA to lessen dust production and limit the zone of influence; and
- implement marker balls, bird diverters, or other strategies to reduce the likelihood of bird collisions with power lines in high-risk location such as near wetlands or other areas of topography.

4.2.8 Raptors

Limited Project activity is expected to occur during the Cross-Country operations phase. Operation of the TLA is not expected to have an appreciable effect on bird densities or behaviour (i.e. reproductive output) following the completion of construction. Minor interference may occur related to vehicle movements associated with periodic inspections and minor maintenance of TLA infrastructure. Periodic clearing of the ROW may cause relocation of species that prefer early successional vegetation.

Periodic clearing of the ROW will maintain open habitat which may increase suitable foraging habitat for some raptor species such as Red-tailed Hawks, Broad-winged Hawks and American Kestrels (Preston and Beane, 2009; Crocoll, 1984; Smallwood and Bird, 2002).

Power line strikes and electrocutions are a major source of bird mortalities. Electrocutions are a notable risk to raptors which may nest and perch on towers and power lines. Electrocution is considered the fourth leading cause of death for Bald Eagles (Lehman, 2001). Large, less maneuverable species are more prone to power line collisions (Huckabee, 1993) and young birds are more likely to strike powerlines than adult birds (Manville, 2005).

In habitats away from wetlands, raptors are among the most susceptible to collisions with power lines (Manville, 2005).

Mitigation measures that will be used to reduce potential adverse effects to birds during the TLA operation phase will include the following:

- minimizing the speed of service vehicles along service roads and the TLA to lessen dust production and limit the zone of influence; and
- implement marker balls, bird diverters, or other strategies to reduce the likelihood of bird collisions with power lines in high-risk location such as near wetlands or other areas of topography.

4.2.9 Species of Special Concern and Provincially Rare Species

Potential operations effects on Canada Warblers, Olive-sided Flycatchers, Common Nighthawks and Rusty Blackbirds along the Cross-Country TLA will be similar to those experienced by other migratory bird species nesting within local study area and regional study area.

Limited Project activity with expected to occur during the Cross-Country operations phase. Operation of the TLA is not expected to have an appreciable effect on Canada Warbler densities or behaviour (i.e. reproductive output) following the completion of construction. Minor interference may occur related to vehicle movements associated with periodic inspections and minor maintenance of TLA infrastructure. Periodic clearing of the ROW may cause relocation of species that prefer early successional vegetation.

Mitigation measures that will be used to reduce potential adverse effects to birds during the TLA operation phase will include the following:

- minimizing the speed of service vehicles along service roads and the TLA to lessen dust production and limit the zone of influence; and
- implement marker balls, bird diverters, or other strategies to reduce the likelihood of bird collisions with power lines in high-risk location such as near wetlands or other areas of topography.

4.3 Closure Phase

4.3.1 Vegetation Communities

During the closure and decommissioning phase, vehicles will travel the length of the corridor to facilitate removal of the TLA wires and tower. Some clearing or disturbance of regrown trees and tall shrubs may be necessary to allow vehicle direct access to the TLA infrastructure for removal. This effect will be temporary and as root masses and ground cover vegetation will remain intact, natural regrowth is anticipated to occur. Mitigation measures for the closure phase include:

- vegetation removal will be reduced to the amount necessary to support closure activities;
- retaining existing low vegetation ground cover vegetation thereby minimizing vegetation clearing and allowing for the maintenance of root masses and ground vegetation that will reduce the potential for erosion and encourage continued vegetation growth beyond closure;
- remove TLA infrastructure in the winter to minimize the potential for ground disturbance and soil erosion by equipment and vehicles and to reduce the necessity for creation of additional permanent access roads;
- remove TLA infrastructure in the winter to avoid sensitive wildlife breeding seasons such as the migratory bird nesting season, where applicable;

- minimizing the speed of service vehicles along service roads and the TLA to lessen dust production and limit the zone of influence; and
- encourage natural revegetation and recolonization of the ROW as part of the reclamation process.

4.3.2 Ungulates – Moose

Moose may be temporarily affected by noise effects and other disturbance related to decommissioning activities, as well as direct vegetation and habitat loss caused by clearing related to temporary access to remove TLA infrastructure. As decommissioning is anticipated to take less time than construction, the level of disturbance will be proportionally less. There may nonetheless be a local displacement of Moose but they are likely to return after activities cease, if the habitat is appropriate. Once the TLA structures are removed, the ROW will be allowed to naturally infill with woody vegetation. Re-vegetation will act to reduce any increase in hunting efficiency from wolves or people by reducing visual sightlines and ease of movement.

Mitigation measures that will be used to reduce potential adverse effects to Moose during the TLA closure phase will include the following:

- schedule decommissioning activities outside the sensitive late winter period from January 1 – March 1;
- utilize existing infrastructure for access and avoid constructing new roads and other corridors where other alternatives exist;
- construction crews will be advised not to interfere or harass wildlife. No hunting by construction crews will be allowed. Disciplinary actions will be taken should either occur; and
- contractors will be required to handle food and food wastes in a responsible manner and to workers will be educated and policies enforced to ensure no feeding of wildlife.

4.3.3 Furbearers – Wolves

Wolves may be temporarily affected by noise effects and other disturbance related to decommissioning activities. As decommissioning is anticipated to take less time than construction, the level of disturbance will be proportionally less. Nonetheless, there may be a local displacement of wolves but they are likely to return after activities cease. Once the TLA structures are removed, the ROW will be allowed to naturally infill with woody vegetation.

Mitigation measures that will be used to reduce potential adverse effects to wolves during the TLA closure phase will include the following:

- utilize existing infrastructure for access and avoid constructing new roads and other corridors where other alternatives exist;
- construction crews will be advised not to interfere or harass wildlife. No hunting by construction crews will be allowed. Disciplinary actions will be taken should either occur; and
- contractors will be required to handle food and food wastes in a responsible manner and to workers will be educated and policies enforced to ensure no feeding of wildlife.

4.3.4 Furbearers – American Marten

Marten may be temporarily affected by noise and other disturbance related to decommissioning activities. As decommissioning is anticipated to take less time than construction, the level of disturbance will be proportionally less. Nonetheless, there may be a local displacement of marten but they are likely to return after activities cease. Once the TLA structures are removed, the ROW will be allowed to naturally infill with woody vegetation.

Mitigation measures that will be used to reduce potential adverse effects to marten during the TLA closure phase will include the following:

- utilize existing infrastructure for access and avoid constructing new roads and other corridors where other alternatives exist;
- construction crews will be advised not to interfere or harass wildlife. No hunting by construction crews will be allowed. Disciplinary actions will be taken should either occur; and
- contractors will be required to handle food and food wastes in a responsible manner and to workers will be educated and policies enforced to ensure no feeding of wildlife.

4.3.5 Furbearers – Black Bear

Black Bears may be temporarily affected by noise effects and other disturbance related to decommissioning activities. As decommissioning is anticipated to take less time than construction, the level of disturbance will be proportionally less. Nonetheless, there may be a local displacement of Black Bears but they are likely to return after activities cease. Once the TLA structures are removed, the ROW will be allowed to naturally infill with woody vegetation.

Mitigation measures that will be used to reduce potential adverse effects during the TLA closure phase will include the following:

- utilize existing infrastructure for access and avoid constructing new roads and other corridors where other alternatives exist;

- construction crews will be advised not to interfere or harass wildlife. No hunting by construction crews will be allowed. Disciplinary actions will be taken should either occur; and
- contractors will be required to handle food and food wastes in a responsible manner and to workers will be educated and policies enforced to ensure no feeding of wildlife.

4.3.6 Bats

Bats may be temporarily affected by noise effects and other disturbance related to decommissioning activities, as well as direct vegetation and habitat loss caused by clearing related to temporary access to remove TLA infrastructure. As decommissioning is anticipated to take less time than construction, the level of disturbance will be proportionally less. Nonetheless there may be a local displacement of foraging activities that may occur along the ROW, but bats are likely to return after activities cease and appropriate foraging habitat is allowed to regenerate. Potential decommissioning effects to bats would be further limited by the decommissioning season, as most decommissioning is expected to take place in the winter.

Once the TLA structures are removed, the ROW will be allowed to naturally infill with woody vegetation.

Mitigation measures that will be used to reduce potential adverse effects to bats during the TLA closure phase will include the following:

- utilize existing infrastructure for access and avoid constructing new roads and other corridors where other alternatives exist; and
- construction crews will be advised not to interfere or harass wildlife. Disciplinary actions will be taken should either occur.

4.3.7 Migratory Birds

Birds may be temporarily affected by noise effects and other disturbance related to decommissioning activities, as well as direct vegetation and habitat loss caused by clearing related to temporary access to remove TLA infrastructure. As decommissioning is anticipated to take less time than construction, the level of disturbance will be proportionally less. Nonetheless, there may be a local displacement of sensitive species but they are likely to return after activities cease, if the habitat is appropriate. Potential decommissioning effects to migratory birds would be further limited by the decommissioning season, as most decommissioning is expected to take place in the winter.

Once the TLA structures are removed, the ROW will be allowed to naturally infill with woody vegetation.

Mitigation measures that will be used to reduce potential adverse effects to birds during the TLA closure phase will include the following:

- schedule decommissioning activities outside the breeding bird nesting season (outside of May 1 to July 31);
- utilize existing infrastructure for access and avoid constructing new roads and other corridors where other alternatives exist;
- construction crews will be advised not to interfere or harass wildlife. No hunting by construction crews will be allowed. Disciplinary actions will be taken should either occur; and
- contractors will be required to handle food and food wastes in a responsible manner and to workers will be educated and policies enforced to ensure no feeding of wildlife.

4.3.8 Raptors

Raptors may be temporarily affected by noise effects and other disturbance related to decommissioning activities, as well as direct vegetation and habitat loss caused by clearing related to temporary access to remove TLA infrastructure. As decommissioning is anticipated to take less time than construction, the level of disturbance will be proportionally less. Nonetheless, there may be a local displacement of sensitive species but they are likely to return after activities cease, if the habitat is appropriate. Potential decommissioning effects to raptors would be further limited by the decommissioning season, as most decommissioning is expected to take place in the winter.

Once the TLA structures are removed, the ROW will be allowed to naturally infill with woody vegetation. Should protected stick nests be developed on TLA towers, the nests will be left in place undisturbed until direction can be provided by regulatory authorities.

Mitigation measures that will be used to reduce potential adverse effects to birds during the TLA closure phase will include the following:

- schedule decommissioning activities outside the breeding bird nesting season (outside of May 1 to July 31);
- utilize existing infrastructure for access and avoid constructing new roads and other corridors where other alternatives exist;
- direct effects to raptor nesting areas will be avoided. There are currently 2 stick nests on or near the existing ROW (see Appendix I). Should any stick nests be identified during construction, the area will be avoided until a qualified avian biologist can be contacted for direction;

- construction crews will be advised not to interfere or harass wildlife. No hunting by construction crews will be allowed. Disciplinary actions will be taken should either occur; and
- contractors will be required to handle food and food wastes in a responsible manner and to workers will be educated and policies enforced to ensure no feeding of wildlife.

4.3.9 Species of Special Concern and Provincially Rare Species

Potential closure effects on Canada Warbler, Common Nighthawk, Olive-sided Flycatcher and Rusty Blackbirds along the Cross-Country TLA will be similar to those experienced by other migratory bird species nesting within local study area and regional study area.

Birds may be temporarily affected by noise effects and other disturbance related to decommissioning activities, as well as direct vegetation and habitat loss caused by clearing related to temporary access to remove TLA infrastructure. As decommissioning is anticipated to take less time than construction, the level of disturbance will be proportionally less. Nonetheless, there may be a local displacement of sensitive species but they are likely to return after activities cease, if the habitat is appropriate. Potential decommissioning effects to Rusty Blackbird would be further limited by the decommissioning season, as most decommissioning is expected to take place in the winter. Once the TLA structures are removed, the ROW will be allowed to naturally infill with woody vegetation.

Mitigation measures that will be used to reduce potential adverse effects to birds during the TLA closure phase will include the following:

- schedule decommissioning activities outside the breeding bird nesting season (outside of May 1 to July 31);
- utilize existing infrastructure for access and avoid constructing new roads and other corridors where other alternatives exist;
- construction crews will be advised not to interfere or harass wildlife. No hunting by construction crews will be allowed. Disciplinary actions will be taken should either occur; and
- contractors will be required to handle food and food wastes in a responsible manner and to workers will be educated and policies enforced to ensure no feeding of wildlife.

4.4 Post-Closure Phase and Summary of Effects through all Project Phases

4.4.1 Vegetation Communities

Overall, vegetation clearing during the construction phase of the Cross-Country TLA will result in the removal of 549.2 ha of forested communities including 146 ha of coniferous swamp. Natural revegetation of the TLA ROW following decommissioning will restore many of these communities to their original state over the course of time. With the implementation of mitigation

measures and natural revegetation upon decommissioning, there will be no detectable residual effects to vegetation communities relative to baseline conditions.

The regional study area has a history of frquent forestry activities and fires and this is reflected in the current vegetation structure. Vegetation communities in the regional study area include young and mature stands of Trembling Aspen, Balsam Poplar and to a lesser extent White Birch, Balsam Fir and White Spruce, all of which are considered pioneer species, colonizing recently disturbed areas. Logging has taken place in several areas within the regional study area, as well as in the surrounding landscape.

The overall Project effects on vegetation communities, through all Project phases, are summarized as follows:

- no detectable effect relative to baseline conditions, and therefore, no detectable impact on the persistence of local populations;
- the effect is restricted to the Project footprint or local study area;
- the duration of the effect is greater than 15 years due to the time required for forest regeneration (in some cases, >60 years);
- the effect occurs infrequently as the majority of Project activity will occur only during the construction phase; and
- the effect is reversible as forest regeneration will begin immediately following Project decommissioning.

4.4.2 Ungulates – Moose

The effect of landscape fragmentation on a variety of wildlife species has been documented (Dyer et al., 2001; Courbin et al., 2009). Effects of fragmentation include increased forest edge, reduced forest interior habitat and increased isolation of forest patches. As the Cross-Country TLA is utilizing an existing ROW as well as creating a new ROW, the TLA is creating additional landscape fragmentation through creation of a new linear corridor through a largely undisturbed area. Predators and hunters will have increased access and ease of movement throughout this new ROW as well, to a lesser extent, in the expanded ROW in the northern portion of the TLA.

Construction of the Cross-Country TLA will result in the removal of 549.2 ha of terrestrial habitat including areas with high potential Moose aquatic carrying capacities as well as 24 ha of identified over-wintering areas and portions of areas with the potential to support moderate to high densities of Moose in the dormant season. However the distribution and abundance of these habitats are common throughout the local and regional study areas and Moose will be able to use these features during the life of the Project. In a local context, the removal of this habitat is notable but the removal of this habitat is not significant within the regional context and no population level effects are expected for Moose within the local and regional study areas.

Predation and hunting rates on local Moose populations may occur under the expanded ROW and associated access road network. The increases in predation may have effects on local Moose, in particular predation and hunting rates may increase in areas that had previously been inaccessible as the forest was largely undisturbed. Whether any increases in predation would affect Moose at the population level depends on the rate of increase and the length of time the new ROW would be accessible. At least one study focusing on Moose use of transmission line

Richard and Doucet, 1999 found that increases in mortality due to the use of ROWs were not significant at the population level. These effects would occur during the life of the Project and are reversible during closure of the Project when the expanded portion of the ROW is re-vegetated to support forest communities again.

The overall Project effects on Moose, through all Project phases, are summarized as follows:

- no detectable effect relative to baseline conditions, and therefore, no detectable impact on the persistence of local populations;
- the effect is restricted to the Project footprint or local study area;
- the duration of the effect is greater than 15 years due to the time required for forest habitat regeneration (in some cases, >60 years);
- the effect occurs infrequently as the majority of Project activity will occur only during the construction phase; and
- the effect is reversible as habitat regeneration will begin immediately following Project decommissioning.

4.4.3 Furbearers – Wolves

Construction of the Cross-Country TLA will result in the removal of 549.2 ha of terrestrial habitat. These habitats are common throughout the local and regional study areas and vegetation removal is not anticipated to have long term negative effects on wolf populations. Noise from construction activities may temporary displace local wolves and/or local Moose that wolves depend on for food. However it is not anticipated that any displacement from construction noise would last past the completion of construction of the TLA.

The creation of the new ROW will create additional landscape fragmentation and may disrupt local predator - prey dynamics in that area. In additional there is a potential for increased access by hunters and trappers due to the facilitation of increased access. Any changes in predator - prey dynamics or hunter and/or trapper access due to the expanded or new ROW would occur during the life of the Project and are reversible through Project closure once the expanded and new portions of the ROW have regenerated back to intact forest communities. Local wolf and prey populations are expected to have already adjusted to the existing ROW in the northern portion of the TLA and significant changes are not anticipated in this portion of the local and regional study areas.

The overall Project effects on wolves, through all Project phases, are summarized as follows:

- no detectable effect relative to baseline conditions, and therefore, no detectable impact on the persistence of local populations;
- the effect is restricted to the Project footprint or local study area;
- the duration of the effect is greater than 15 years due to the time required for forest habitat regeneration (in some cases, >60 years);
- the effect occurs infrequently as the majority of Project activity will occur only during the construction phase; and
- the effect is reversible as habitat regeneration will begin immediately following Project decommissioning.

4.4.4 Furbearers – American Marten

Construction of the Cross-Country TLA will result in the removal of 549.2 ha of terrestrial habitat including 127 ha of identified core marten habitat. The regional study area has 10,958 ha and the local study area has 6,311 ha of core marten habitat to use adjacent to the ROW for individuals displaced by construction. These habitats are common throughout the local and regional study areas and vegetation removal is not anticipated to have long term negative effects on marten populations. Noise from construction activities may temporarily displace local marten and/or local prey that marten depend on for food. However it is not anticipated that any displacement would last past the completion of construction.

Increased noise and disturbance from recreational activities such as snowmobiling are not anticipated to increase with the ROW expansion, however may increase along the new ROW. There is a potential for increased access by trappers due to the creation of additional access roads and along the new ROW. Any changes in trapper access due to the expanded ROW would occur during the life of the Project and are reversible through Project closure when the expanded portion of the ROW and associated access roads regenerate back to an intact forest community.

The overall Project effects on American Marten, through all Project phases, are summarized as follows:

- no detectable effect relative to baseline conditions, and therefore, no detectable impact on the persistence of local populations;
- the effect is restricted to the Project footprint or local study area;
- the duration of the effect is greater than 15 years due to the time required for forest habitat regeneration (in some cases, >60 years);

- the effect occurs infrequently as the majority of Project activity will occur only during the construction phase; and
- the effect is reversible as habitat regeneration will begin immediately following Project decommissioning.

4.4.5 Furbearers – Black Bear

Construction of the Cross-Country TLA will result in the removal of 549.2 ha of terrestrial habitat. These habitats are common throughout the local and regional study areas and vegetation removal is not anticipated to have long term negative effects on Black Bear populations. Noise from construction activities may temporary displace local Black Bears. However it is not anticipated that any displacement from construction noise would last past the completion of construction of the TLA.

The creation of the new ROW will create additional landscape fragmentation and may disrupt local predator - prey dynamics in that area. In additional there is a potential for increased access by hunters and trappers due to the facilitation of increased access. Any changes in predator - prey dynamics or hunter and/or trapper access due to the expanded or new ROW would occur during the life of the Project and are reversible through Project closure once the expanded and new portions of the ROW have regenerated back to intact forest communities.

The overall Project effects on Black Bears, through all Project phases, are summarized as follows:

- no detectable effect relative to baseline conditions, and therefore, no detectable impact on the persistence of local populations;
- the effect is restricted to the Project footprint or local study area;
- the duration of the effect is greater than 15 years due to the time required for forest habitat regeneration (in some cases, >60 years);
- the effect occurs infrequently as the majority of Project activity will occur only during the construction phase; and
- the effect is reversible as habitat regeneration will begin immediately following Project decommissioning.

4.4.6 Bats

A total of 130 ha of suitable vegetation community types for bat roosting habitat will be cleared for Project development, although these 145 ha have not been deemed to be significant roosting habitat as per MNR guidelines (MNR, 2000; 2011c). Despite the clearing of a 45 m ROW for implementation of the TLA, large tracts of forest will continue to maintain interior forest habitat. The majority of deciduous forest within the Cross-Country TLA local study area is middle aged to mature aspen-birch hardwood forest that contains a low density of snags and

cavity trees, thus cleared forest is unlikely to affect critical roosting habitat for cavity-roosting species. These larger forest complexes are also likely to have one or more foraging habitat features within it, including wetlands which help maintain the quality any available roosting habitat therein.

Little increased local vehicular traffic is anticipated and the probability of vehicle - bat collisions will remain low. Few increases in barrier effects of roadways near the foraging habits of bat species (woodland edges, over water and above the height of most vehicles) are expected occur and an increase in edge habitat caused by the clearing of the ROW may provide an increase in low to moderate quality foraging habitat for local bat species.

The overall Project effects on bats, through all Project phases, are summarized as follows:

- no detectable effect relative to baseline conditions, and therefore, no detectable impact on the persistence of local populations;
- the effect is restricted to the Project footprint or local study area;
- the duration of the effect is greater than 15 years due to the time required for forest habitat regeneration (in some cases, >60 years);
- the effect occurs infrequently as the majority of Project activity will occur only during the construction phase; and
- the effect is reversible as habitat regeneration will begin immediately following Project decommissioning.

4.4.7 Migratory Birds

Construction of the Cross-Country TLA will result in the removal of 549.2 ha of terrestrial habitat. In a local context, the removal of this habitat is notable but is not significant within the regional context and no population level effects are expected for migratory bird species within the local study area or regional study area.

Large tracks of uncut forest are more likely to contain mature interior forest, comprised of a greater diversity of plant and wildlife species compared to small isolated woodlands and also provide interior woodland habitat to woodland area sensitive species. However, habitat fragmentation and the loss of interior woodland habitat along the Cross-Country TLA will be minimal due to the existing ROW. Furthermore, the continued presence of large tracts of interior forest habitat throughout the regional study area moderates the adverse effects caused by construction activities.

The overall Project effects on migratory birds, through all Project phases, are summarized as follows:

- no detectable effect relative to baseline conditions, and therefore, no detectable impact on the persistence of local populations;
- the effect is restricted to the Project footprint or local study area;
- the duration of the effect is greater than 15 years due to the time required for forest habitat regeneration (in some cases, >60 years);
- the effect occurs infrequently as the majority of Project activity will occur only during the construction phase; and
- the effect is reversible as habitat regeneration will begin immediately following Project decommissioning.

4.4.8 Raptors

It is anticipated that Côté Gold Project activities will have few adverse effects on the raptor nests located along the Cross-Country TLA local study area. Raptor species currently nesting within the footprint are relatively tolerant to anthropogenic disturbance. It is anticipated that the installation of the proposed transmission line may provide increased opportunities for raptor nesting and increase raptor hunting habitat. Common Ravens, Osprey and Red-tailed Hawks are all known to use transmission line poles as nesting locations and Common Ravens are already using the existing ROW as such. A large body of data shows that Osprey will readily use artificial structures as nesting sites (Avian Power Line Interaction Committee, 2006).

At closure, all disturbed sites will be reclaimed to terrain types that can be utilized by a diversity of wildlife species, including raptors.

The overall Project effects on raptors, through all Project phases, are summarized as follows:

- no detectable effect relative to baseline conditions, and therefore, no detectable impact on the persistence of local populations;
- the effect is restricted to the Project footprint or local study area;
- the duration of the effect is greater than 15 years due to the time required for forest habitat regeneration (in some cases, >60 years);
- the effect occurs infrequently as the majority of Project activity will occur only during the construction phase; and
- the effect is reversible as habitat regeneration will begin immediately following Project decommissioning.

4.4.9 Species of Special Concern and Provincially Rare Species

Overall, construction of the Cross-Country TLA will result in the clearing and temporary removal of i) 232.9 ha of deciduous mixed woodland habitat which may be used as nesting habitat by Canada Warbler, ii) 403.2 ha of forest (deciduous mixed woodland and coniferous woodland) habitat which may be used as nesting habitat for Common Nighthawk, iii) 22.9 ha of wetland habitat and 146 ha of coniferous forest habitat suitable for Olive-sided Flycatcher, iv) 22.9 ha of wetland habitat and 146 ha of coniferous forest habitat suitable for Rusty Flycatcher, and v) 22.6 ha of wetland habitat and 3.8 ha of open water habitats which may provide potential habitat to Snapping Turtles.

Vegetation clearing and sound associated with the construction of the proposed transmission line corridor will occur largely outside of the breeding season and is thus unlikely to cause mortality or impair reproductive success of these species.

Although increased local vehicular traffic may increase the probability of wildlife-vehicle collisions, enforced speed limits, road signs warning of wildlife and inclusion of wildlife safety into mine safety training inductions will greatly reduce this risk.

The overall Project effects on species of special concern and provincially rare species, through all Project phases, are summarized as follows:

- no detectable effect relative to baseline conditions, and therefore, no detectable impact on the persistence of local populations;
- the effect is restricted to the Project footprint or local study area;
- the duration of the effect is greater than 15 years due to the time required for forest habitat regeneration (in some cases, >60 years);
- the effect occurs infrequently as the majority of Project activity will occur only during the construction phase; and
- the effect is reversible as habitat regeneration will begin immediately following Project decommissioning.

5.0 GOVERNMENT, ABORIGINAL AND PUBLIC COMMENTS

Few concerns have been express by stakeholders relative to the effects assessment indicators discussed in this report. There are reports of some Aboriginal harvest of raspberries and blueberries within the regional study area for both the Shining Tree and Cross-Country TLAs and concern expressed that new or widened corridors will facilitate access for hunters. The MNR has expressed concerns about the loss of Eastern Whip-poor-will habitat and breeding displacement due to the installation of the Shining Tree TLA and aboriginal groups have expressed concern over the welfare of waterfowl using the regional study areas, including loons. No other specific concerns have as yet been expressed by government agencies, Aboriginal groups or other than generalized statements and expressions of concern that all reasonable efforts should be taken to minimize adverse effects to wildlife populations and in particular SAR.

IAMGOLD recognizes these concerns and has taken measures in the Project plan to both reduce adverse environmental effects to vegetation and plant life, and wildlife through the development of effective mitigation and contingency strategies described within the EA.

6.0 CONCLUSIONS

This analysis has determined that direct and indirect disturbances resulting from the Côté Gold Project along both the Shining Tree and Cross-Country TLAs are considered to have no detectable lasting residual effects relative to baseline conditions, once mitigation and closure measures are considered. Temporary effects to plants and wildlife are solely confined to Project lands but will last continuously through construction (2 years), operations (15 years) and into the mine closure phase until the existing vegetation communities are restored. These habitats are common throughout the region and are restorable, and hence the Project effects are reversible and, therefore, no lasting residual effects are anticipated.

Short-term displacement of wildlife species found along either TLA footprint will occur during the construction and closure phases of the Project due to the temporary presence of Project personnel and equipment, but displaced species and their preferred habitats are common throughout both the local and regional study areas and these species will be able to settle in nearby suitable habitats. Conducting construction and closure activities between August and April would avoid sensitive summer breeding seasons for wildlife (May to the end of July). Late winter habitat areas for Moose (upland coniferous areas) should also be avoided in January and February when Moose can be nutritionally and energetically stressed.

Some wildlife species will avoid the TLA footprint during the operations phase (for instance interior species that avoid open fields or linear corridors) but these species and their preferred habitats are also common throughout both the local and regional study areas, and these species will be able to settle in nearby suitable habitats and will eventually return to the footprint after natural revegetation during the post-closure phase.

It should be noted that there is a history of disturbance and habitat loss from forestry and fires in the regional study area and this is reflected in the vegetation structure. Vegetation communities include young and mature stands of Trembling Aspen, Balsam Poplar and to a lesser extent White Birch, Balsam Fir and White Spruce, all of which are considered pioneer species, colonizing recently disturbed areas. Logging has taken place in several areas within the regional study area, as well as in the surrounding landscape. There is also a high level of human activity along much of the regional study area, including cottages, roads and highways, as well as a network of snow machine trails used in the winter. As a result of these other widespread land use interests in the region, wildlife species in the area may already be somewhat adapted to both temporary and chronic, direct and indirect, disturbances.

7.0 REFERENCES

Altman, B. and R. Sallabanks. 2000. Olive-sided Flycatcher (*Contopus cooperi*) *In* The Birds of North America, No 502 (A. Poole and G. Gill, Eds.). The Birds of North America Inc., Philadelphia, PA.

AMEC. 2005. Mackenzie Gas Project Effect of Noise on Wildlife. 74 pages.

Anderson, R., J. Linnell and R. Langvatn. 1996. Short Term Behavioural and Physiological Response of Moose (*Alces alces*) to Military Disturbance in Norway. Biological Conservation, 77:169-176.

Aune, K.E. 1994. Comparative Ecology of Black and Grizzly Bears on the Rocky Mountain Front, Montana. International Conference for Bear Research and Management, 9:365-74.

Avery, M.L. 1995. Rusty Blackbird (*Euphagus carolinus*) *In* The Birds of North America Online (A. Poole, Ed.). Cornell Lab of Ornithology. Accessed December 2012 from the Birds of North America Online: http://bna.birds.cornell.edu/bna/species/200.

Avian Power Line Interaction Committee (APLIC). 2006. Suggested Practices for Raptor Protection on Power Lines - the State of the Art in 1996.

Barber, J.R., B.A. Chadwell, N. Garrett, B. Schmidt-French and W.E. Conner. 2009. Naïve Bats Discriminate Arctiid Moth Warning Sounds but Generalize Their Aposematic Meaning. Journal of Experimental Biology, 212:2141-2148.

Bangs, E.E., S.A. Duff and T.N. Bailey. 1985. Habitat Differences and Moose Use of Two Large Burns on the Kenai Peninsula, Alaska. Alces, 21:17-35.

Bennett, V.J. and A.A. Zurcher. 2013. When Corridors Collide: Road-Related Disturbance in Commuting Bats. The Journal of Wildlife Management, 77:93-101.

Beringer, J.J., S.G. Seibert and M.R. Pelton. 1990. Incidence of Road Crossing by Black Bears on Pisgah National Forest, North Carolina. International Conference for Bear Research and Management, 8:85-92.

Berry, M.E., C.E. Bock and S.L. Haire. 1998. Abundance of Diurnal Raptors on Open Space Grasslands in an Urbanized Landscape. Condor, 100:601-608.

Bildstein, K.L. and K. Meyer. 2000. Sharp-shinned Hawk (*Accipiter striatus*) *In* The Birds of North America Online (A. Poole, Ed.). Cornell Lab of Ornithology. Accessed September 2013 from the Birds of North America Online: http://bna.birds.cornell.edu/bna/species/482 doi:10. 2173/bna.482.

Blickley, J.L. and G.L. Patricelli. 2010. Impacts of Anthropogenic Noise on Wildlife: Research Priorities for the Development of Standards and Mitigation. Journal of International Wildlife Law and Policy, 13:274-292.

Boarman, W.I. 1993. When a Native Predator Becomes a Pest: A Case Study *In* Conservation and Resource Management (S.K. Majumdar, E.W. Miller, D.E. Baker, E.K. Brown, J.R. Pratt and R.F. Schmalz, Eds.). Pennsylvania Academy of Science Easton, PA.

Boarman, W.I. and B. Heinrich. 1999. Common Raven (*Corvus corax*) *In* The Birds of North America Online (A. Poole, Ed.). Cornell Lab of Ornithology. Retrieved from the Birds of North America Online: http://bna.birds.cornell.edu/bna/species/476doi:10.2173/bna.476

Brody. A.J. and J.N. Stone. 1987. Timber Harvest and Black Bear Population Dynamics in a Southern Appalachian Forest. International Conference for Bear Research and Management, 7:243-50.

Cadman, M.D., D.A. Sutherland, G.G. Beck, D. Lepage and A.R. Couturier. 2007. Atlas of the Breeding Birds of Ontario. Bird Studies Canada, Environment Canada, Ontario Field Ornithologists, Ontario Ministry of Natural Resources, Ontario Nature. 728 pages.

Chapin, T.G., D.J. Harrison and D.M. Phillips. 1997. Seasonal Habitat Selection by Marten in an Untrapped Forest Preserve. Journal of Wildlife Management, 61:707-717.

Cink, C.L. 2002. Eastern Whip-poor-will (*Caprimulgus vociferus*) *In* The Birds of North America Online (A. Poole, Ed.). Cornell Lab of Ornithology. Accessed June 2013 from http://bna.birds.cornell.edu/bna/species/620.

Clark, T.W., E. Anderson, C. Douglas and M. Strickland. 1987. *Martes americana*. Mammalian Species, 289:1-8.

Coleman, J.L., Bird, D.M. and E.A. Jacobs. 2002. Habitat Use and Productivity of Sharp-shinned Hawks Nesting in an Urban Area. Wilson Bulletin, 114:467–473.

Committee on the Status of Endangered Wildlife in Canada (COSEWIC). 2008a. COSEWIC Assessment and Update Status Report on the Snapping Turtle (*Chelydra serpentina*) in

Canada. Committee on the Status of Endangered Wildlife in Canada. Ottawa. vii + 47 pages.

Committee on the Status of Endangered Wildlife in Canada (COSEWIC). 2008b. COSEWIC Assessment and Update Status Report on the Canada Warbler (*Wilsonia canadensis*) in Canada. Committee on the Status of Endangered Wildlife in Canada. Ottawa. vi + 35 pages.

Conway, C.J. 1999. Canada Warbler (*Wilsonia canadensis*) *In* The Birds of North America, No. 421 (A. Poole and F. Gill, Eds.). The Birds of North America, Inc., Philadelphia, PA.

Courbin, N., D. Fortin, C. Dussault and R. Courtois. 2009. Landscape Management for Woodland Caribou: The Protection of Forest Blocks Influences Wolf - Caribou Co-occurrence. Landscape Ecology, 24:1375-1388.

Crocoll, S.T. 1984. Breeding Biology of Broad-winged and Red-shouldered Hawks in Western New York. Master's Thesis. State University College, Fredonia, NY.

Davis, T., Walker, D.J. and B. Kotak. 2010. Utilization of Anthropogenic and Natural Corridors by Wolves (*Canis lupus*) in Eastern Manitoba and the Impacts Upon Woodland Caribou (*Rangifer tarandus caribou*). Winnipeg, University of Manitoba.

Del Frate, G.G. and T.H. Spraker. 1991. Moose Vehicle Interactions and an Associated Public Awareness Program on the Kenai Peninsula, Alaska. Alces, 27:1-7.

Dyer, S.J., J.P. O'Neill, S.M. Wasel and S. Boutin. 2001. Avoidance of Industrial Development by Woodland Caribou. The Journal of Wildlife Management, 65:531-542.

Doerr, J.G. 1983. Home Range Size, Movements and Habitat Use in Two Moose (Alces alces) Populations in Southeastern Alaska. Canadian Field-Naturalist, 97:79–88.

Eastman, J. 1991. Whip-poor-will In The Atlas of Breeding Birds of Michigan (R. Brewer, G.A. McPeek and R.J. Adams Jr., Eds.). Michigan State University Press, East Lansing, Michigan.

Elkie, P., R. Rempel, B. Naylor, M. Gluck, J. Elliott and R. Kushneriuk, 2013. Science and Information in Support of Policies that Address Landscape Level Moose Requirements: Science Pack - Series B, Habitat Definitions, Models and Simulation Results. Ontario Ministry of Natural Resources, Forest Policy Section.

Environment Canada. 2013. Species Profile: Common Nighthawk. Accessed September 2013 from http://www.sararegistry.gc.ca/species/speciesDetails_e.cfm?sid=986.

Erskine, A.J. 1977. Birds in Boreal Canada: Communities, Densities, and Adaptations. Canadian Wildlife Service Report No. 41.

Estes, J.A., K. Crooks and R. Holt. 2001. Predators, Ecological Role of, *In* The Encyclopedia of Biodiversity (S.A. Levin, Ed.). Academic Press, Vol. 4.

Farmer, A.M. 1993. The Effects of Dust on Vegetation – A Review. Environmental Pollution, 79:63-75.

Forsey, E.S. and E.M. Baggs. 2001. Winter Activity of Mammals in Riparian Zones and Adjacent Forest Prior to and Following Clear-cutting at Copper Lake, Newfoundland, Canada. Forest Ecology Management, 145:163-171.

Golder Associates. 2013. IAMGOLD Corporation Terrestrial Baseline Studies, Côté Gold Project. 162 pages.

Grossman, S.R., S.J. Hannon and A. Sánchez-Azofeifa. 2008. Responses of Great Horned Owls (*Bubo virginianus*), Barred Owls (*Strix varia*) and Northern Saw-whet Owls (*Aegolius acadicus*) to Forest Cover and Configuration in an Agricultural Landscape in Alberta, Canada. Canadian Journal of Zoology, 86:1165-1172.

Hargis, C.D., J.A. Bissonette and D.L. Turner. 1999. The Influence of Forest Fragmentation and Landscape Pattern on American Martens. Journal of Applied Ecology, 36:157-172.

Hargis, C.D. and D.R. McCullough. 1984. Winter Diet and Habitat Selection of Marten in Yosemite National Park. Journal of Wildlife Management, 48:140-146.

Hobbs, N.T. 1989. Linking Energy Balance to Survival in Mule Deer: Development and Test of a Simulation Model. Wildlife Monographs, 101:1-39.

Holcroft, A. C. 1986. Aspects of Black Bear Ecology and Campground Planning in Southwestern Alberta. Master's in Environmental Design Project, University of Calgary. 90 pages.

Horejsi, B.L. 1979. Seismic Operations and Their Impact on Large Mammals: Results of a Monitoring Program. Western Wildlife Environments. Mobil Oil Canada Ltd. Calgary, Alberta.

Huckabee, J.W. 2003. Proceedings: Avian Interactions with Utility Structures. International Workshop, September 13-16, 1992. Miami, FL. Electric Power Research Institute, Project 3041, EPRI TR-103268.

Hull, C.N. 1980. Additional Successful Nesting of a Red-tailed Hawk in an Urban Subdivision. Jack-Pine Warbler, 58:30.

Jalkotzy, M.G., P.I. Ross and M.D. Nasserden. 1997. The Effects of Linear Developments on Wildlife: A Review of Selected Scientific Literature. Prepared for Canadian Association of Petroleum Producers, Calgary. 354 pages.

James, A.R.C. and A.K. Stuart-Smith. 2000. Distribution of Caribou and Wolves in Relation to Linear Corridors. Journal of Wildlife Management, 64:154-159.

James, D.A. and J.C. Neal. 1986. Arkansas Birds: Their Distribution and Abundance. University of Arkansas Press, Fayetteville.

Kasworm, W.F. and T.L. Manley. 1990. Road and Trail Influences on Grizzly Bears and Black Bears in Northwest Montana. International Conference for Bear Research and Management, 8:79-84.

Katnik, D.D., D.J. Harrison and T.P. Hodgman. 1994. Spatial Relations in a Harvested Population of Marten in Maine. Journal of Wildlife Management, 58:600-607.

Koehler, G.M. and M.G. Hornocker. 1977. Fire Effects on Marten Habitat in the Selway Bitterroot Wilderness. Journal of Wildlife Management, 41:500-505.

Kunkel, K.E. and D.E. Pletscher. 2000. Habitat Factors Affecting Vulnerability of Moose to Predation by Wolves in Southeastern British Columbia. Canadian Journal of Zoology, 78:150-157.

Lambert, J.D. and S.D. Faccio. 2005. Canada Warbler Population Status, Habitat Use and Stewardship Guidelines for the Northeastern Forests. VINS Technical Report 5-4. Vermont Institute of Natural Sciences. Woodstock, Vermont.

Latham, D.M.A., M.C. Latham, M.S. Boyce and S. Boutin. 2011. Movement Responses by Wolves to Industrial Linear Features and Their Effect on Woodland Caribou in Northeastern Alberta. Ecological Applications, 21:2854–2865.

Lehman, R.N. 2001. Raptor Electrocution on Power Lines: Current Issues and Outlook. Wildlife Society Bulletin, 29:804-813.

Lynch, G.M. and L.E. Morgantini. 1984. Sex and Age Differential in Seasonal Home Range Size of Moose in North-Central Alberta, 1971–1979. Alces, 20:61-78.

Manitoba Hydro. 2012. Wuskwatim Transmission Project – Environmental Monitoring Program Boreal Woodland Caribou Component. Winnipeg, Manitoba.

Mannan, R.W., C.W. Boal, W.J. Burroughs, J.W. Dawson, T.S. Estabrook, W.S. Richardson, R.D. Chancellor and B.U. Meyburg. 2000. Nest Sites of Five Raptor Species along an Urban Gradient *In* Raptors at Risk (R.D. Chancellor and B.U. Meyburg, Eds.) Proceedings of the 5th World Conference on Birds of Prey and Owls, Midrand, Johannesburg, South Africa, August 4-11,1998.

Manville, A.M. 1983. Human Impact on the Black Bear in Michigan's Lower Peninsula. Conference for Bear Research and Management, 5:20-33

Manville, A.M. 1987. Den Selection and Use by Black Bears in Michigan's Northern Lower Peninsula. Conference for Bear Research and Management, 7:17-22.

Manville. A.M. 2005. Bird Strikes and Electrocutions at Power Lines, Communication Towers, and Wind Turbines: State of the Art and State of the Science – Next Steps Toward Mitigation. U.S.D.A. Forest Service General Technical Report. PSW-GTR-191.

Martin, S.H. and R.H. Barrett. 1983. The Importance of Snags to Pine Marten Habitat in the Northern Sierra Nevada. Pages 114-116 in J.W. Davis, G.A. Goodwin and R.A. Ockenfels, Tech. Coords. Snag Habitat Management: Proceedings of the Symposium. USDA Forest Service General Technical Report RM-99. 266 pages.

Miller, B., B. Dugelby, D. Foreman, C. Martinez del Rio, R. Noss, M. Phillips, R. Reading, M. E. Soulé, J. Terborgh and L. Wilcox. 2001. The Importance of Large Carnivores to Healthy Ecosystems. Endangered Species Update, 18:202-210.

Mills, A.M. 1987. Whip-poor-will *In* The Atlas of the Breeding Birds of Ontario (Cadman, M.D., P.F.J. Eagles and F.M. Helleiner, Eds). University of Waterloo Press, Waterloo, Ontario. 617 pages.

Ministry of Natural Resources (MNR). 1996. Forest Management Guidelines for the Provision of Marten Habitat.

Ministry of Natural Resources (MNR). 2000. Significant Wildlife Habitat Technical Guide.

Ministry of Natural Resources (MNR). 2009a. Cervid Ecological Framework.

Ministry of Natural Resources (MNR). 2009b. Moose Management Policy.

Ministry of Natural Resources (MNR). 2005. Backgrounder on Wolf Conservation in Ontario.

Ministry of Natural Resources (MNR). 2010a Forest Management Guide for Conserving Biodiversity at the Stand and Site Scales.

Ministry of Natural Resources (MNR). 2010b. 2012 – 2022 Forest Management Plan for the Abitibi River Forest.

Ministry of Natural Resources (MNR). 2010c. 2012 – 2022 Forest Management Plan for the Spanish Forest.

Ministry of Natural Resources (MNR). 2010d. Forest Management Guide for Conserving Biodiversity at the Stand and Site Scales. Queen's Printer for Ontario. Toronto, Ontario. 211 pages.

Ministry of Natural Resources (MNR). 2011a. 2011 – 2021 Forest Management Plan for the Timiskaming Forest.

Ministry of Natural Resources (MNR). 2011b. 2011 – 2021 Forest Management Plan for the Pineland Forest.

Ministry of Natural Resources (MNR). 2011c. Bats and Bat Habitats: Guidelines for Wind Power Projects. Queen's Printer for Ontario: July 2011.

Ministry of Natural Resources (MNR). 2012. Draft Significant Wildlife Habitat Ecoregion 3E Criterion Schedule.

Ministry of Natural Resources (MNR). 2013a. Moose Resource Report Wildlife Management Unit 29.

Ministry of Natural Resources (MNR) 2013b. Moose Resource Report Wildlife Management Unit 31.

Ministry of Natural Resources (MNR) 2013c. Moose Resource Report Wildlife Management Unit 34.

Minor, W F., M. Minor and M.F. Ingraldi. 1993. Nesting of Red-tailed Hawks and Great Horned Owls in a Central New York Urban/Suburban Area. Journal of Field Ornithology, 64:433-439.

Mladenoff, D.J., R.G. Haight, T.A. Sickley and A.P. Wydeven. 1997. Causes and Implications of Species Restoration in Altered Ecosystems: A Spatial Landscape Projection of Wolf Population Recovery. BioScience, 47:21-31.

Naughton, D. 2012. The Natural History of Canadian Mammals.

Naylor, B., D. Kaminski, S. Bridge, P. Elkie, D. Ferguson, G. Lucking and B. Watt. 1999. User's Guide for OWHAM and OWHAM Tool. OMNR, SCSS Technical Report No. 54.

Nicholls, B. and P.A. Racey. 2007. Bats Avoid Radar Installations: Could Electromagnetic Fields Deter Bats from Colliding with Wind Turbines? PLoS ONE. 2(3): e287.doi:10.1371/journal. pone. 0000297.

Ontario Partners in Flight (PIF). 2008. Ontario Landbird Conservation Plan: Lower Great lakes/St. Lawrence Plain, North American Bird Conservation Region 13. Ontario Ministry of Natural Resources, Bird Studies Canada, Environment Canada. Draft Version 2.0.

Palidwor, K.L., D.W. Schindler and B.R. Hagglund. 1995. Habitat Suitability Index Models Within the Manitoba Model Forest Region: Moose (*Alces alces*) Version 2.0.Developed by Terrestrial and Aquatic Pilot Moose Habitat Model for the Mid Boreal Uplands Ecoregion of the Manitoba Model Forest.

Paquet, P.C. and L.N. Carbyn. 2003. Gray Wolf *In* Wild Mammals of North America: Biology, Management, and Conservation (G.A. Feldhamer, B.C. Thompson and J.A. Chapman Eds.). Johns Hopkins University Press.

Preston, C.R. and R.D. Beane. 2009. Red-tailed Hawk (*Buteo jamaicensis*) in The Birds of North America Online (A. Poole, Ed.). Cornell Lab of Ornithology. Retrieved August 2013 from the Birds of North America Online: http://bna.birds.cornell.edu/bna/species/ 052doi:10.2173 /bna.52

Poulin, R.G., L.D. Todd and R.M. Brigham. 1998. Male Common Nighthawk Use of Gravel Roads at Night. Prairie Naturalist, 30:85-90.

Reed, T. 2003. Wolves in Wyoming, Montana, and Idaho. Wyoming Wildlife, LXVII 11:22-30.

Ricard, J.G. and G.L. Doucet. 1999. Winter Use of Powerline Corridors by Moose (*Alces alces*). Alces, 35:31-40.

Rich, T.D., C.J. Beardmore, H. Berlanga, P.J. Blancher, M.S.W. Brandstreet, G.S. Butcher, D.W. Demarest, E.H. Dunn, W.C. Hunter, E.E. Inigo-Elias, J.A. Kenned, A.M. Martell, A.O. Panjabi, D.N. Pashley, K.V. Rosenberg, C.M. Rustay, J.S. Wendt and T.C. Will. 2004. Partners in Flight North American Landbird Conservation Plan. Cornell Lab of Ornithology, Ithaca, NY.

Robbins, C.S., D.K. Dawson and B.A. Dowell. 1989. Habitat Area Requirements of Breeding Forest Birds of the Middle Atlantic States. Wildlife Monographs, 103:1-34.

Rolley, R.E. and L.B. Keith. 1980. Moose Populations and Winter Habitat Use at Rochester, Alberta, 1965–1979. Canadian Field Naturalist, 94:9-18.

Rudd, L.T. and L.L. Irwin. 1985. Wintering Moose vs. Oil/Gas Activity in western Wyoming. Alces, 21:279-298.

Ruggiero, L.F., E. Pearson and S.E. Henry. 1998. Characteristics of American Marten Den Sites in Wyoming. The Journal of Wildlife Management, 62:663-673.

Sauer, J. R., J. E. Hines and J. Fallon. 2013. The North American Breeding Bird Survey, Results and Analysis 1966-2012. Version 5.15.2008. U.S.G.S. Patuxent Wildlife Research Center, Laurel, MD. Accessed July 2013 at http://www.mbr-pwrc.usgs.gov/bbs.

Schmitz, O.J. 1998. Direct and Indirect Effects of Predation and Predation Risk in Old-field Interaction Webs. American Naturalist, 151:327-340.

Schoener, T.W. and D.A. Spiller. 1999. Indirect Effects in an Experimentally Staged Invasion by a Major Predator. American Naturalist, 153:347-358.

Sherburne, S.S. and J.A. Bissonette. 1994. Marten Subnivean Access Point Use: Response to Subnivean Prey Levels. The Journal of Wildlife Management, 58:400-405.

Simon, T.L. 1980. An Ecological Study of the Marten in the Tahoe National Forest, California. Unpublished M.Sc. Thesis, California State University, Sacramento. 187 pages.

Singer, F.J. and J.B. Beattie. 1986. The Controlled Traffic System and Associated Wildlife Responses in Denali National Park. Arctic, 39:195– 203.

Smallwood, J.A. and D.M. Bird. 2002. American Kestrel (*Falco sparverius*) in The Birds of North America Online (A. Poole, Ed.). Cornell Lab of Ornithology. Retrieved from the Birds of North America Online: http://bna.birds.cornell.edu/bna/species/602.

Soutiere, E.C. 1979. Effects of Timber Harvesting on Marten in Maine. Journal of Wildlife Management, 43:850-860.

Spencer, W.D., R.H. Barrett and W.J. Zielinski. 1983. Marten (*Martes americana*) Habitat Preferences in the Northern Sierra-Nevada, U.S.A. Journal of Wildlife Management, 47:1181-1186.

Stein, J. 2000. The Effects of Roads on Wolves and Bears Worldwide. Yale University.

Stevenson, H.M. and B.H. Anderson. 1994. The Birdlife of Florida. University Presses of Florida, Gainesville.

Stout, W.E., Anderson, R.K. and J.M. Papp. 1998. Urban, Suburban and Rural Red-tailed Hawk Nesting Habitat and Populations in Southeast Wisconsin. Journal of Raptor Research, 32:221-228.

Stout, W.E., Temple, S.A. and J.M. Papp. 2006. Landscape Correlates of Reproductive Success for an Urban-suburban Red-tailed Hawk population. Journal of Wildlife Management, 70:989-997.

Swan, M., C. Ortega, B. Davies, E. Wicks, and A. Otway. 2000. The Effects of Urbanization on Raptors Along the Front Range of Colorado. Journal of the Colorado Field Ornithologists, 34:32-40.

Thomas, D.C. 1995. A Review of Wolf - Caribou Relationships and Conservation Implications in Canada *In* Ecology and Conservation of Wolves in a Changing World (L.N. Carbyn, S.H. Fritts and D.R. Seip Eds.). Canadian Circumpolar Institute, University of Alberta. Art Design Printing Inc., Edmonton.

Thompson, I.D. 1994. Marten Populations in Uncut and Logged Boreal Forests in Ontario. Journal of Wildlife Management, 58:272-280.

Tietje, W.D. and R.L. Ruff. 1983. Responses of Black Bears to Oil Development in Alberta. Wildlife Society Bulletin, 11:99-112.

U.S. Fish and Wildlife Service (USFWS). 1987. Northern Rocky Mountain Wolf Recovery Plan. U.S. Fish and Wildlife Service, Denver, Colorado.

U.S. Fish and Wildlife Service (USFWS). 1994. The Reintroduction of Gray Wolves to Yellowstone National Park and Central Idaho: Final Environmental Impact Statement. U.S. Fish and Wildlife Service. Denver, CO.

U.S. Fish and Wildlife Service (USFWS), Nez Perce Tribe, National Park Service, and USDA Wildlife Services. 2003. Rocky Mountain Wolf Recovery 2002 Annual Report (T. Meier, Ed.). USFWS, Ecological Services, 100 N. Park, Suite 320, Helena, Montana. http://mountain-prairire.fws.gov/wolf/annualrpt02.

Valentine, A.E. 1978. The Successful Nesting of a Red-tailed Hawk (*Buteo jamaicensis*) in an Urban Subdivision. Jack-Pine Warbler 56:209-210.

Watt, W.R., J.A. Baker, D.M. Hogg, J.G. McNicol and B.J. Naylor. 1996. Forest Management Guidelines for the Provision of Marten Habitat. Version 1.0. Ontario Ministry of Natural Resources. Forest Management Branch.

Weaver, J.L., P.C. Pacquet and L.F. Ruggiero. 1996. Resilience and Conservation Of Large Carnivores in the Rocky Mountains. Conservation Biology, 10:964-976.

Webb, S.M., and M.S. Boyce. 2009. Marten Fur Harvests and Landscape Change in West-central Alberta. Journal of Wildlife Management, 73:894-903.

Wilson, S.G. 1985. Summer Distribution of Whip-poor-wills in Minnesota. Loon, 57:6-8.

Wynne, K.M. and J.A. Sherburne. 1984. Summer Home Range Use by Adult Marten in Northwestern Maine. Canadian Journal of Zoology, 62:941-943.

Zielinski, W.J., K.M. Slauson and A.E. Bowles. 2008. Effects of Off-highway Vehicle Use on the American Marten. Journal of Wildlife Management, 72:1558–1571.

FIGURES

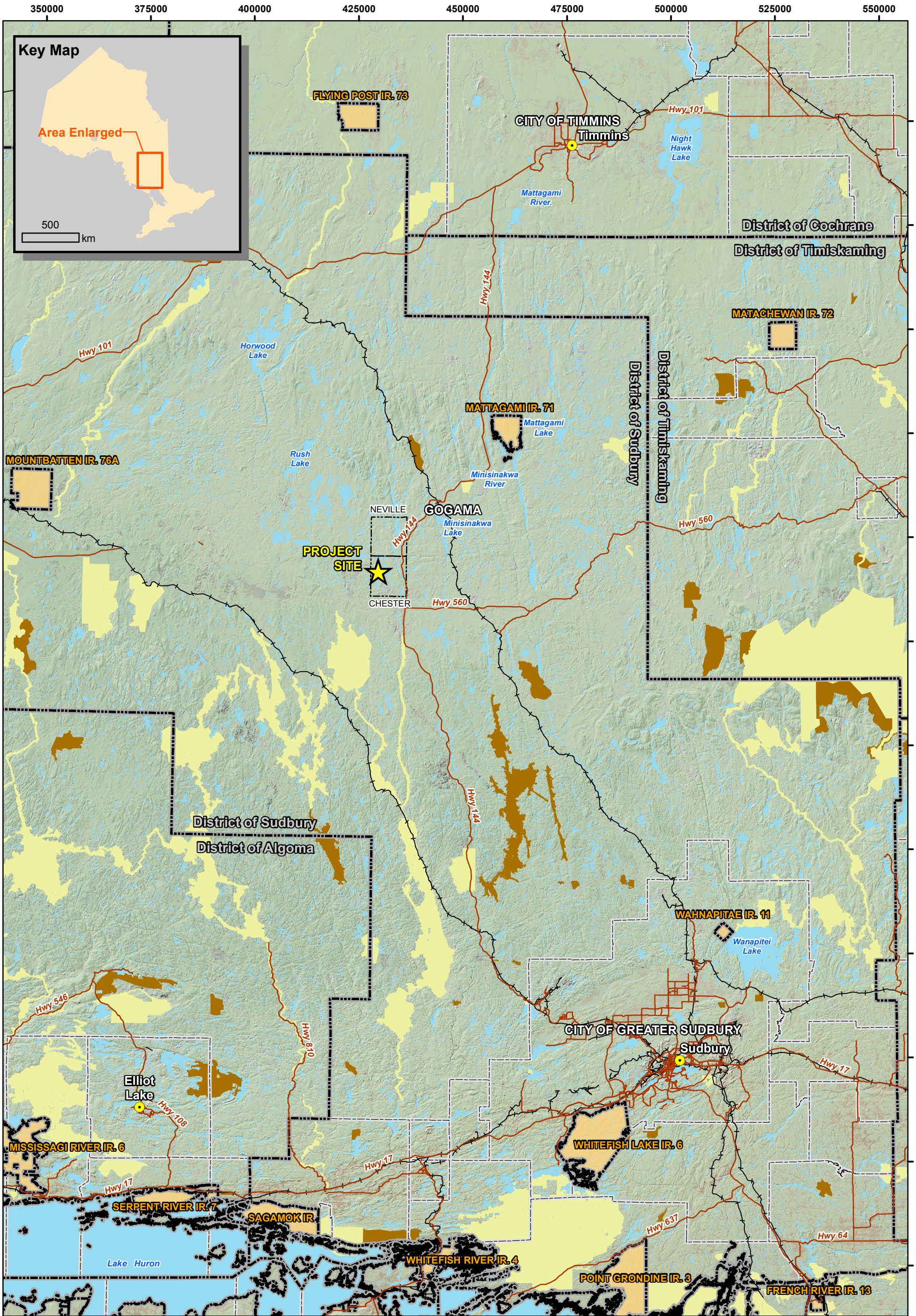

Path: P:\EM\Projects\2012\TC121522 IAMGOLD Cote Project\GIS\EA\Terrestrial\MXD\Project_Location.mxd, Author: ken.brookes, modified by monica.deveau, 28 November 2013

LEGEND

- Project Site Location
- Regional Communities
- Major Roads
- Railway
- Lower Tier Municipality Boundary
- Upper Tier Municipality Boundary
- First Nation Reserve
- Conservation Reserve (Regulated)
- Provincial Park
- Wooded Area
- Waterbody / Large Watercourse

NOTES:
- Base data on this map was extracted from Land Information Ontario, MNDM, OBM Ontario Digital Geospatial Database and Ontario Road Network Database.

Datum: NAD83
Projection: UTM Zone 17N

0 12.5 25 50 75 100 Kilometres

IAMGOLD® CORPORATION amec

CÔTÉ GOLD PROJECT

Project Location

DRAFT

PROJECT N°: TC121522	**FIGURE: 1**
SCALE: 1:850,000	DATE: December 2013

420000 430000 440000 450000 460000 470000 480000 490000

5370000 5360000 5350000 5340000 5330000 5320000 5310000 5300000 5290000 5280000 5270000 5260000

CITY OF TIMMINS

GROUNDHOG RIVER WATERWAY

DANA-JOWSEY LAKES

Kenogamissi Lake

Peterlong Lake

Mattagami Lake

Cross-Country

Shinning Tree

MATTAGAMI R. 71

Sinclair Lake

AKONESI CHAIN OF LAKES COMPLEX CONSERVATION RESERVE

GRASSY RIVER-MOND LAKE LOWLANDS AND FERRIS LAKE UPLANDS

LA MOTTE

Pebonishewi Lake

Minisinakwa Lake

Mesomikenda Lake

GOGAMA

MACMURCHY TOWNSHIP END MORAINE

Bagsverd Lake

BISCOTASI LAKE

Path: P:\EM\Projects\2012\TC121522 IAMGOLD Cote Project\GIS\EA\Terrestrial\MXD\TLA_Study_Area.mxd, Author: SM, modified by monica.deveau, 18 December 2013

LEGEND

- Project Site Location
- 2 km Study Area
- Roads
- Railway
- Existing 115 kV Transmission Line

PROPORSED 230 kV TRANSMISSION LINE
- Cross-Country
- Shinning Tree

CONSERVATION
- First Nation Reserve
- Conservation Reserve (Regulated)
- Provincial Park

RESIDENTIAL, TOURISM AND COTTAGES
- Cottage Residential Area
- Tourism Establishment Area

NOTES:
- Topographic data extraction from Land Information Ontario (Ministry of Natural Resourses)

IAMGOLD® CORPORATION amec

CÔTÉ GOLD PROJECT

Transmission Line Study Area

DRAFT

Datum: NAD83
Projection: UTM Zone 17N

N W E S

0 5 10 20 30 40 Kilometres

PROJECT N°: TC121522 | FIGURE: 2

SCALE: 1:325,000 | DATE: December 2013

465000 470000 475000 480000 485000

5375000 5370000 5365000 5360000 5355000 5350000 5345000

LEFEBVRE ROAD
MAHONEY ROAD NORTH
SANDY FALLS ROAD
JAGUAR DRIVE
GOVERNMENT ROAD NORTH
SHIRLEY STREET NORTH
AIRPORT ROAD
MACLEAN DRIVE
HIGHWAY 655
TEXAS GULF ROAD
LEGION DRIVE
CRAWFORD STREET
TISDALE STREET
CARON ROAD
CITY OF TIMMINS
RIVERSIDE DRIVE
DALTON ROAD
VIPOND ROAD
WAWIATIN ROAD
PINE STREET SOUTH
PINE STREET
Kenogamissi Lake

Path: P:\EMPProjects\2012\TC121522 IAMGOLD Cote Project\GIS\EA\Terrestrial\MXD\Vegetation_Communities3.mxd, Author: SM, modified by monica.deveau, 18 December 2013

LEGEND

- 2 km Study Area
- Existing 115 kV Transmission Line
- Transmission Line Aignment ROW

RESIDENTIAL, TOURISM AND COTTAGES

- Cottage Residential Area
- Tourism Establishment Area

CONSERVATION

- First Nation Reserve
- Conservation Reserve (Regulated)
- Provincial Park

PROPOSED 230 kV TRANSMISSION LINE

- Both 230 kV Transmission Line Alignment
- Proposed Cross-Country 230 kV Transmission Line Alignment
- Proposed Shining Tree 230 kV Transmission Line Alignment

VEGETATION COMMUNITIES

- Coniferous Forest
- Wetland
- Deciduous/Mixed Forest
- Other Communities
- Water

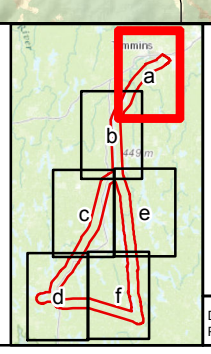

NOTES:
- Topographic data extraction from Land Information Ontario (Ministry of Natural Resourses)
- Vegetation communities were identified by AMEC and Golder

Datum: NAD83
Projection: UTM Zone 17N

0 1 2 4 6 8 10 Kilometres

IAMGOLD CORPORATION amec

CÔTÉ GOLD PROJECT

Vegetation Communities

DRAFT

PROJECT N°: TC121522	**FIGURE: 3a**
SCALE: 1:100,000	DATE: December 2013

450000 455000 460000 465000 470000

5350000 5345000 5340000 5335000 5330000 5325000 5320000

GHWAY 101 EAST

Kenogamissi Lake

Peterlong Lake

Mattagami Lake

Path: P:\EMProjects\2012\TC121522 IAMGOLD Cote Project\GIS\EA\Terrestrial\MXD\Vegetation_Communities3.mxd, Author: SM, modified by monica.deveau, 18 December 2013

LEGEND

- 2 km Study Area
- Existing 115 kV Transmission Line
- Transmission Line Aignment ROW

RESIDENTIAL, TOURISM AND COTTAGES

- Cottage Residential Area
- Tourism Establishment Area

CONSERVATION

- First Nation Reserve
- Conservation Reserve (Regulated)
- Provincial Park

PROPOSED 230 kV TRANSMISSION LINE

- Both 230 kV Transmission Line Alignment
- Proposed Cross-Country 230 kV Transmission Line Alignment
- Proposed Shining Tree 230 kV Transmission Line Alignment

VEGETATION COMMUNITIES

- Coniferous Forest
- Wetland
- Deciduous/Mixed Forest
- Other Communities
- Water

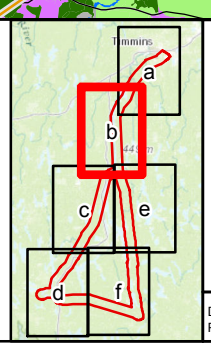

NOTES:
- Topographic data extraction from Land Information Ontario (Ministry of Natural Resourses)
- Vegetation communities were identified by AMEC and Golder

Datum: NAD83
Projection: UTM Zone 17N

0 1 2 4 6 8 10 Kilometres

N W E S

IAMGOLD® CORPORATION amec

CÔTÉ GOLD PROJECT

Vegetation Communities

DRAFT

PROJECT N°: TC121522	**FIGURE: 3b**
SCALE: 1:100,000	DATE: December 2013

435000 440000 445000 450000 455000

5320000 5315000 5310000 5305000 5300000 5295000 5290000

Mattagami Lake

AKONESI CHAIN OF LAKES COMPLEX CONSERVATION RESERVE

MATTAGAMI INDIAN RESERVE NO. 71

HIGHWAY 144

HIGHWAY 110

LA MOTTE

Mesomikenda Lake

Path: P:\EM\Projects\2012\TC121522 IAMGOLD Cote Project\GIS\EA\Terrestrial\MXD\Vegetation_Communities3.mxd, Author: SM, modified by monica.deveau, 18 December 2013

LEGEND

- 2 km Study Area
- Existing 115 kV Transmission Line
- Transmission Line Aignment ROW

RESIDENTIAL, TOURISM AND COTTAGES

- Cottage Residential Area
- Tourism Establishment Area

CONSERVATION

- First Nation Reserve
- Conservation Reserve (Regulated)
- Provincial Park

PROPOSED 230 kV TRANSMISSION LINE

- Both 230 kV Transmission Line Alignment
- Proposed Cross-Country 230 kV Transmission Line Alignment
- Proposed Shining Tree 230 kV Transmission Line Alignment

VEGETATION COMMUNITIES

- Coniferous Forest
- Wetland
- Deciduous/Mixed Forest
- Other Communities
- Water

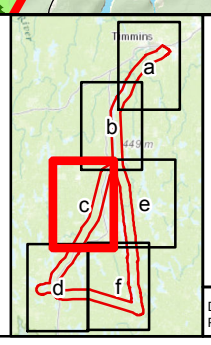

NOTES:
- Topographic data extraction from Land Information Ontario (Ministry of Natural Resourses)
- Vegetation communities were identified by AMEC and Golder

Datum: NAD83
Projection: UTM Zone 17N

0 1 2 4 6 8 10 Kilometres

IAMGOLD CORPORATION amec

CÔTÉ GOLD PROJECT

DRAFT

Vegetation Communities

PROJECT N°: TC121522	**FIGURE: 3c**
SCALE: 1:100,000	DATE: December 2013

425000 430000 435000 440000 445000

5285000 5280000 5275000 5270000 5265000 5260000 5255000

Pebonishewi Lake
Mesomikenda Lake
Bagsverd Lake
Minisinakwa Lake
BISCOTASI LAKE
SPANISH RIVER
JACK ROAD
2010
2011
570
366
HIGHWAY 651

Path: P:\EM\Projects\2012\TC121522 IAMGOLD Cote Project\GIS\EA\Terrestrial\MXD\Vegetation_Communities3.mxd, Author: SM, modified by monica.deveau, 18 December 2013

LEGEND

- 2 km Study Area
- Existing 115 kV Transmission Line
- Transmission Line Aignment ROW

RESIDENTIAL, TOURISM AND COTTAGES

- Cottage Residential Area
- Tourism Establishment Area

CONSERVATION

- First Nation Reserve
- Conservation Reserve (Regulated)
- Provincial Park

PROPOSED 230 kV TRANSMISSION LINE

- Both 230 kV Transmission Line Alignment
- Proposed Cross-Country 230 kV Transmission Line Alignment
- Proposed Shining Tree 230 kV Transmission Line Alignment

VEGETATION COMMUNITIES

- Coniferous Forest
- Wetland
- Deciduous/Mixed Forest
- Other Communities
- Water

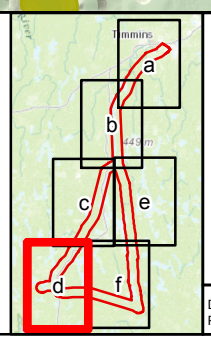

NOTES:
- Topographic data extraction from Land Information Ontario (Ministry of Natural Resourses)
- Vegetation communities were identified by AMEC and Golder

Datum: NAD83
Projection: UTM Zone 17N

0 1 2 4 6 8 10 Kilometres

IAMGOLD CORPORATION amec

CÔTÉ GOLD PROJECT

DRAFT

Vegetation Communities

PROJECT N°: TC121522 | **FIGURE: 3d**

SCALE: 1:100,000 | DATE: December 2013

460000 465000 470000 475000 480000

5320000 5315000 5310000 5305000 5300000 5295000 5290000

Kenogamissi Lake
Mattagami Lake
Peterlong Lake
Sinclair Lake

MATTAGAMI INDIAN RESERVE NO. 71

GRASSY RIVER-MOND LAKE LOWLANDS AND FERRIS LAKE UPLANDS

Path: P:\EMProjects\2012\TC121522 IAMGOLD Cote Project\GIS\EA\Terrestrial\MXD\Vegetation_Communities3.mxd, Author: SM, modified by monica.deveau, 18 December 2013

LEGEND

- 2 km Study Area
- Existing 115 kV Transmission Line
- Transmission Line Aignment ROW

RESIDENTIAL, TOURISM AND COTTAGES

- Cottage Residential Area
- Tourism Establishment Area

CONSERVATION

- First Nation Reserve
- Conservation Reserve (Regulated)
- Provincial Park

PROPOSED 230 kV TRANSMISSION LINE

- Both 230 kV Transmission Line Alignment
- Proposed Cross-Country 230 kV Transmission Line Alignment
- Proposed Shining Tree 230 kV Transmission Line Alignment

VEGETATION COMMUNITIES

- Coniferous Forest
- Wetland
- Deciduous/Mixed Forest
- Other Communities
- Water

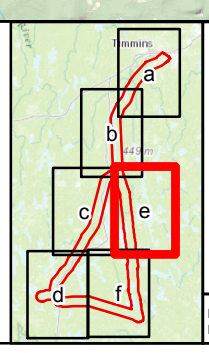

NOTES:
- Topographic data extraction from Land Information Ontario (Ministry of Natural Resourses)
- Vegetation communities were identified by AMEC and Golder

Datum: NAD83
Projection: UTM Zone 17N

0 1 2 4 6 8 10 Kilometres

IAMGOLD CORPORATION amec

CÔTÉ GOLD PROJECT

DRAFT

Vegetation Communities

PROJECT N°: TC121522 | **FIGURE: 3e**

SCALE: 1:100,000 | DATE: December 2013

450000 455000 460000 465000 470000

5285000 5280000 5275000 5270000 5265000 5260000 5255000

LA MOTTE

HIGHWAY 58

HIGHWAY 560A

Path: P:\EMPprojects\2012\TC121522 IAMGOLD Cote Project\GIS\EA\Terrestrial\MXD\Vegetation_Communities3.mxd, Author: SM, modified by monica.deveau, 18 December 2013

LEGEND

- 2 km Study Area
- Existing 115 kV Transmission Line
- Transmission Line Aignment ROW

RESIDENTIAL, TOURISM AND COTTAGES

- Cottage Residential Area
- Tourism Establishment Area

CONSERVATION

- First Nation Reserve
- Conservation Reserve (Regulated)
- Provincial Park

PROPOSED 230 kV TRANSMISSION LINE

- Both 230 kV Transmission Line Alignment
- Proposed Cross-Country 230 kV Transmission Line Alignment
- Proposed Shining Tree 230 kV Transmission Line Alignment

VEGETATION COMMUNITIES

- Coniferous Forest
- Wetland
- Deciduous/Mixed Forest
- Other Communities
- Water

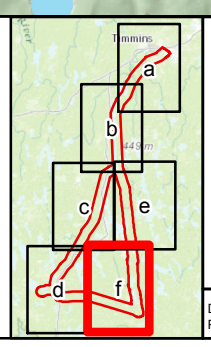

NOTES:
- Topographic data extraction from Land Information Ontario (Ministry of Natural Resourses)
- Vegetation communities were identified by AMEC and Golder

0 1 2 4 6 8 10 Kilometres

Datum: NAD83
Projection: UTM Zone 17N

N W E S

IAMGOLD CORPORATION amec

CÔTÉ GOLD PROJECT

Vegetation Communities

DRAFT

PROJECT N°: TC121522	**FIGURE: 3f**
SCALE: 1:100,000	DATE: December 2013

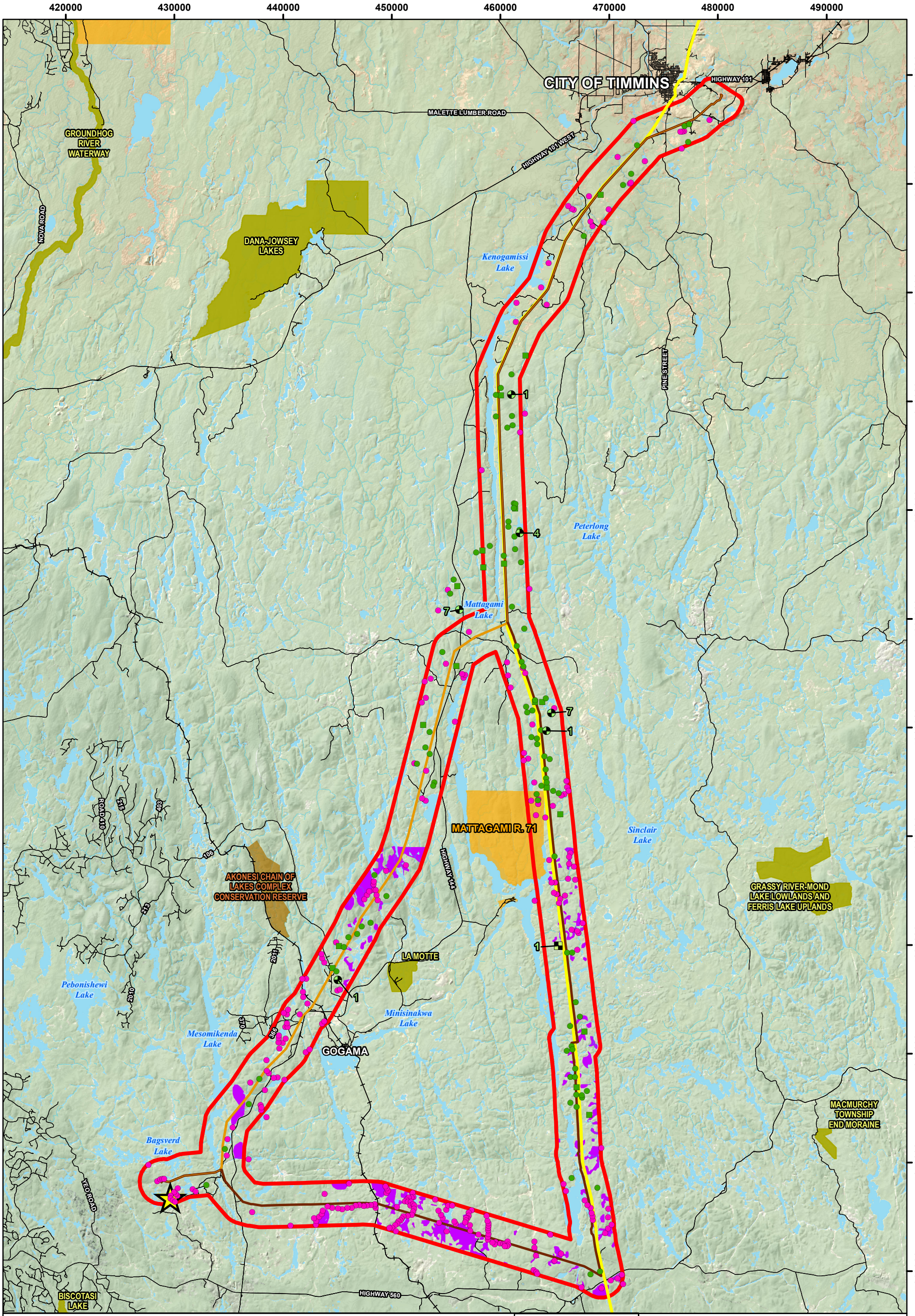

Path: P:\EM\Projects\2012\TC121522 IAMGOLD Cote Project\GIS\EA\Terrestrial\MXD\Moose_Habitat_FMP3.mxd, Author: SM, modified by monica.deveau, 28 November 2013

LEGEND

- Project Site Location
- 2 km Study Area
- Roads
- Railway
- Existing 115 kV Transmission Line

PROPOSED 230 kV TRANSMISSION LINE
- Cross-Country/Shinning Tree
- Cross-Country
- Shinning Tree

CONSERVATION
- First Nation Reserve
- Conservation Reserve (Regulated)
- Provincial Park

FOREST MANAGEMNT PLAN MOOSE HABITAT
- Aquatic Feeding Area
- Overwintering Area

AERIAL SURVEY RESULTS (February 2012)
- Tracks
- Moose Sighting (Labelled with number of individuals oberserved)

AERIAL SURVEY RESULTS (April 2012)
- Tracks
- Moose Sighting (Labelled with number of individuals oberserved)

NOTES:
- Topographic data extraction from Land Information Ontario (Ministry of Natural Resourses)
- Moose overwintering areas and aquatic feeding areas were digized from Forest Management Plans

Datum: NAD83
Projection: UTM Zone 17N

0 5 10 20 30 40 Kilometres

IAMGOLD CORPORATION amec

CÔTÉ GOLD PROJECT

Moose Overwintering and Aquatic Feeding Areas

DRAFT

PROJECT N°: TC121522 | FIGURE: 4

SCALE: 1:325,000 | DATE: December 2013

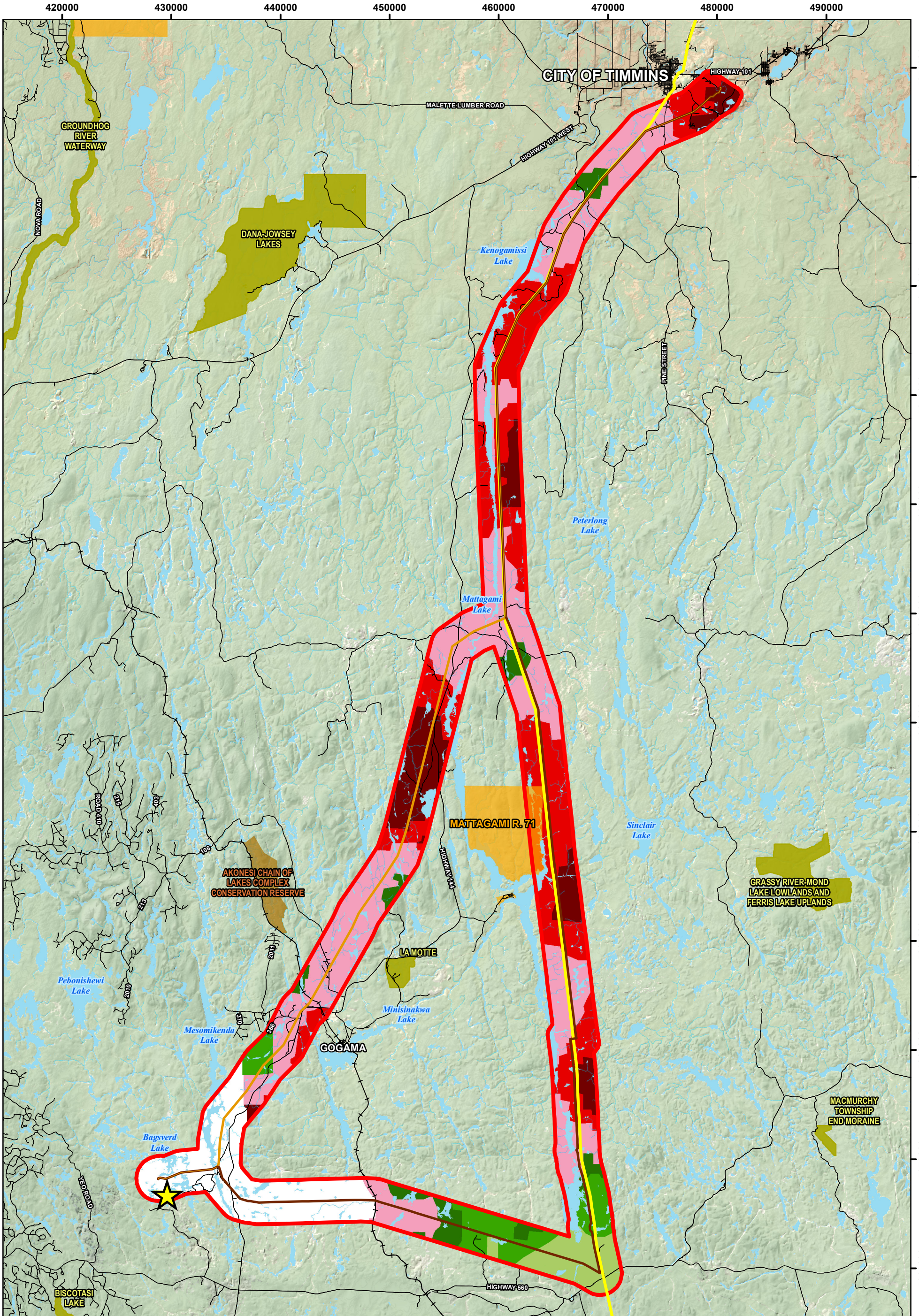

Path: P:\EM\Projects\2012\TC121522 IAMGOLD Cote Project\GIS\EA\Terrestrial\MXD\Moose_Aquatic_Carrying_Capacity_2.mxd, Author: SM, modified by monica.deveau, 28 November 2013

LEGEND

- Project Site Location
- 2 km Study Area
- Roads
- Railway
- Existing 115 kV Transmission Line

PROPORSED 230 kV TRANSMISSION LINE

- Cross-Country/Shinning Tree
- Cross-Country
- Shinning Tree

CONSERVATION

- First Nation Reserve
- Conservation Reserve (Regulated)
- Provincial Park

MOOSE AQUATIC CARRYING CAPACITY*
(Number of Moose/km²)

- 0.16-0.20 (Low - Moderate Density)
- 0.21-0.25 (Moderate Density)
- 0.26-0.30 (Moderate Density)
- 0.31-0.40 (Moderate - High Density)
- 0.41-0.50 (High Density)
- >0.50 (High Density)
- No Data (MNR unable to provide)

*Moose carrying capacities were digitized from simulated model results. These models estimate landscape potential, expressed as potential moose density, using climatic and habitat suitability index models (OWHAM) (Naylor et al 1999).

NOTES:
- Topographic data extraction from Land Information Ontario (Ministry of Natural Resourses)

Datum: NAD83
Projection: UTM Zone 17N

0 5 10 20 30 40 Kilometres

IAMGOLD® CORPORATION amec

CÔTÉ GOLD PROJECT

Moose Aquatic Carrying Capacity

DRAFT

PROJECT N°: TC121522 | **FIGURE: 5**

SCALE: 1:325,000 | DATE: December 2013

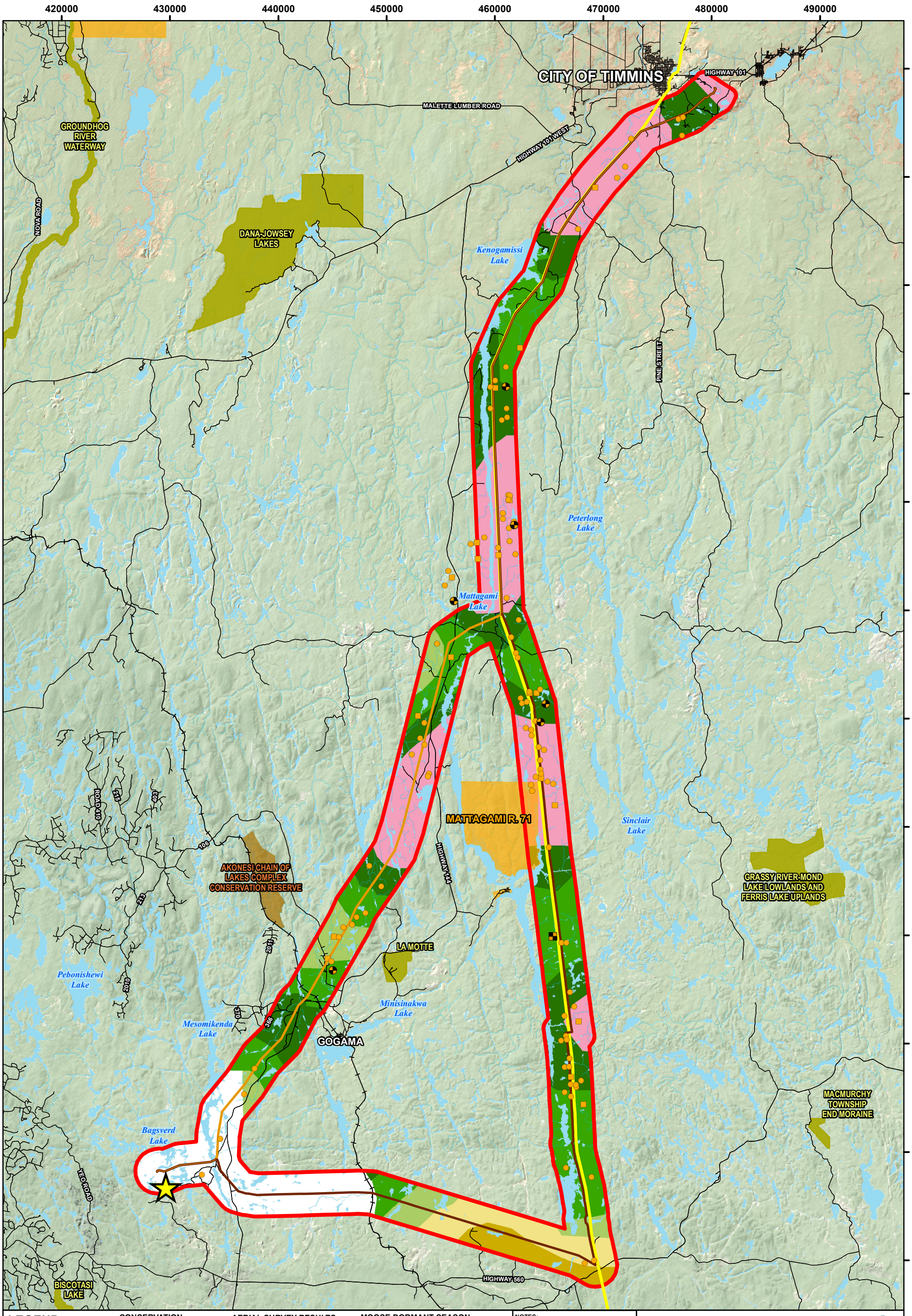

Path: P:\EM\Projects\2012\TC121522 IAMGOLD Cote Project\GIS\EA\Terrestrial\MXD\Moose_Dormant_Season_Carrying_Capacity3.mxd, Author: SM, modified by monica.deveau, 28 November 2013

LEGEND

- Project Site Location
- 2 km Study Area
- Roads
- Railway
- Existing 115 kV Transmission Line

PROPOSED 230 kV TRANSMISSION LINE

- Cross-Country/Shinning Tree
- Cross-Country
- Shinning Tree

CONSERVATION

- First Nation Reserve
- Conservation Reserve (Regulated)
- Provincial Park

AERIAL SURVEY RESULTS (February 2012)

- Tracks
- Moose Sighting (Labelled with number of individuals oberserved)

AERIAL SURVEY RESULTS (April 2012)

- Tracks
- Moose Sighting (Labelled with number of individuals oberserved)

MOOSE DORMANT SEASON CARRYING CAPACITY*

(Number of Moose/km²)

- 0.06-0.10 (Low Density)
- 0.11-0.15 (Low Density)
- 0.16-0.20 (Low - Moderate Density)
- 0.21-0.25 (Moderate Density)
- 0.26-0.30 (Moderate Density)
- 0.31-0.40 (Moderate - High Density)
- No Data (MNR unable to provide)

*Moose carrying capacities were digitized from simulated model results. These models estimate landscape potential, expressed as potential moose density, using climatic and habitat suitability index models (OWHAM) (Naylor et al 1999).

NOTES:
- Topographic data extraction from Land Information Ontario (Ministry of Natural Resourses)

0 5 10 20 30 40 Kilometres

Datum: NAD83
Projection: UTM Zone 17N

N W E S

IAMGOLD® CORPORATION amec

CÔTÉ GOLD PROJECT

Moose Dormant Season Carrying Capacity

DRAFT

PROJECT Nº: TC121522	**FIGURE: 6**
SCALE: 1:325,000	DATE: December 2013

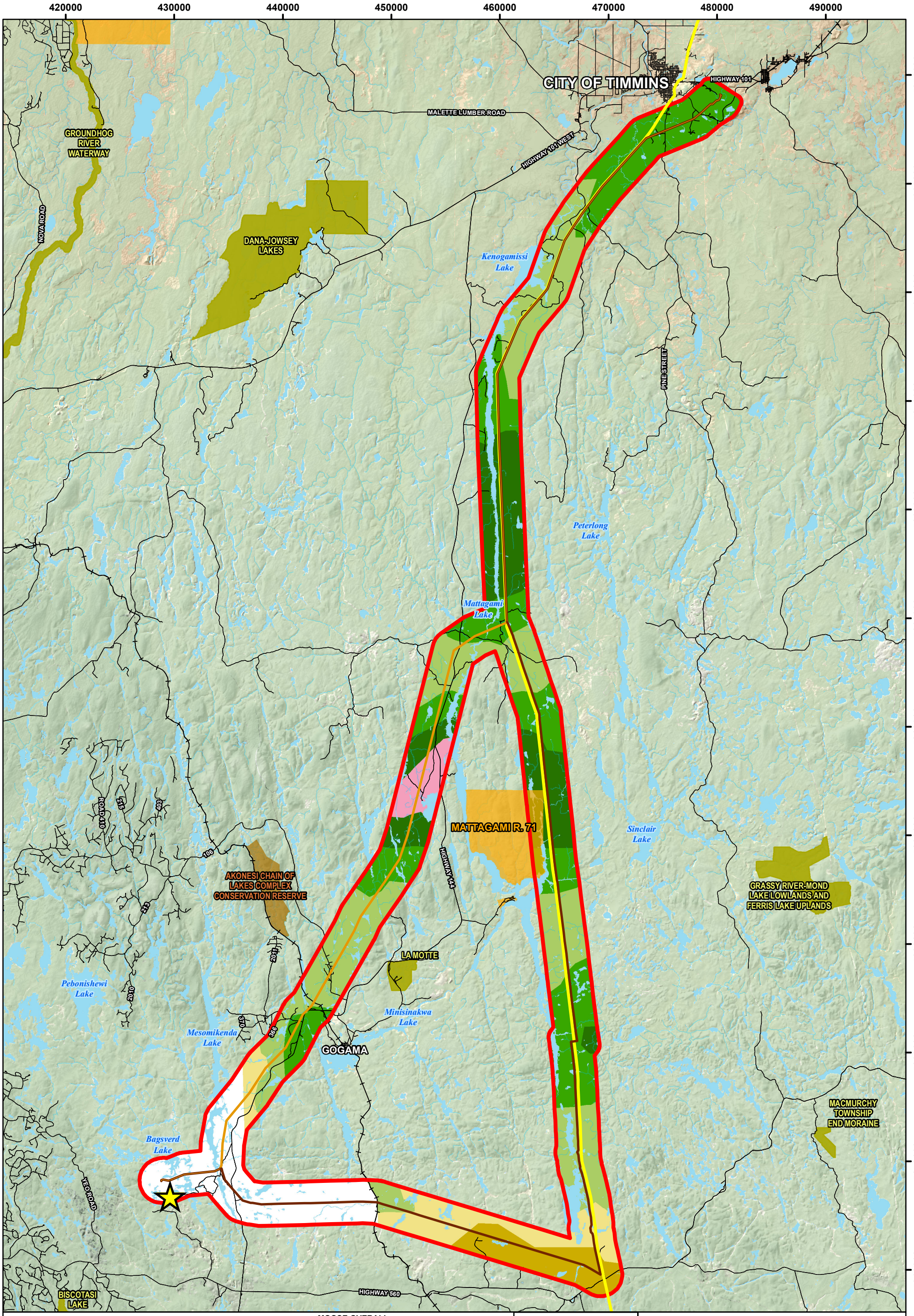

Path: P:\EM\Projects\2012\TC121522 IAMGOLD Cote Project\GIS\EA\Terrestrial\MXD\Moose_Overall_Carrying_Capacity_2.mxd, Author: SM, modified by monica.deveau, 28 November 2013

LEGEND

- Project Site Location
- 2 km Study Area
- Roads
- Railway
- Existing 115 kV Transmission Line

PROPORSED 230 kV TRANSMISSION LINE

- Cross-Country/Shinning Tree
- Cross-Country
- Shinning Tree

CONSERVATION

- First Nation Reserve
- Conservation Reserve (Regulated)
- Provincial Park

MOOSE OVERALL CARRYING CAPACITY*
(Number of Moose/km^2)

- 0.06-0.10 (Low Density)
- 0.11-0.15 (Low Density)
- 0.16-0.20 (Low - Moderate Density)
- 0.21-0.25 (Moderate Density)
- 0.26-0.30 (Moderate Density)
- 0.31-0.40 (Moderate - High Density)
- No Data (MNR unable to provide)

*Moose carrying capacities were digitized from simulated model results. These models estimate landscape potential, expressed as potential moose density, using climatic and habitat suitability index models (OWHAM) (Naylor et al 1999).

NOTES:
- Topographic data extraction from Land Information Ontario (Ministry of Natural Resourses)

Datum: NAD83
Projection: UTM Zone 17N

0 5 10 20 30 40 Kilometres

IAMGOLD® CORPORATION amec

CÔTÉ GOLD PROJECT

Moose Overall Carrying Capacity

DRAFT

PROJECT N^{O}: TC121522 | **FIGURE: 7**

SCALE: 1:325,000 | DATE: December 2013

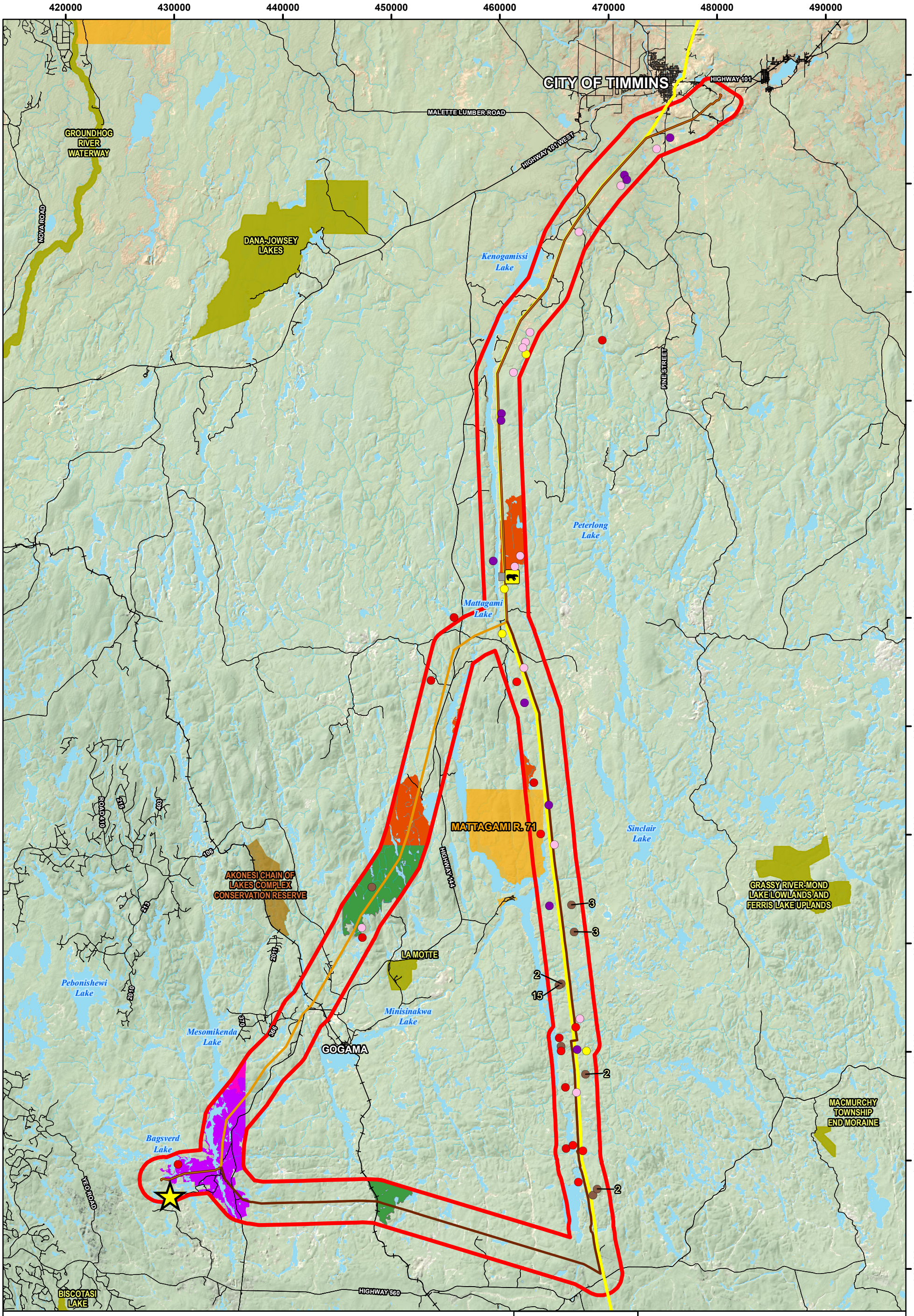

Path: P:\EM\Projects\2012\TC121522 IAMGOLD Cote Project\GIS\EA\Terrestrial\MXD\Bear_ and_Marten_Core_Use_Areas_2.mxd, Author: SM, modified by monica.deveau, 28 November 2013

LEGEND

- Project Site Location
- 2 km Study Area
- Roads
- Railway
- Existing 115 kV Transmission Line

PROPOSED 230 kV TRANSMISSION LINE

- Cross-Country/Shinning Tree
- Cross-Country
- Shinning Tree

CONSERVATION

- First Nation Reserve
- Conservation Reserve (Regulated)
- Provincial Park

ROMEO MALETTE FMA

- Marten Core Use Area (60 years)

SPANISH FMA

- Marten Core Use Area (20 years)
- Marten Core Use Area (60 years)

TIMISTAMING FMA

- Marten Core Use Area

AERIAL SURVEY RESULTS

- Black Bear Sighting
- Black Bear Den
- Bear "Nest" (Clusters are labeled with the number of "nest" observed)
- Bear Tracks
- Deer Tracks
- Wolf Tracks
- Marten Tracks

NOTES:

- Topographic data extraction from Land Information Ontario (Ministry of Natural Resourses)
- Marten core use habitat was digized from Forest Management Plans
- Bear sightings and habitat identified during February 2012 and April 2013 aerial surveys.

Datum: NAD83
Projection: UTM Zone 17N

0 5 10 20 30 40 Kilometres

IAMGOLD CORPORATION amec

CÔTÉ GOLD PROJECT

Marten Core Use Area and Bear Habitat

DRAFT

PROJECT N°: TC121522	**FIGURE: 8**
SCALE: 1:325,000	DATE: December 2013

APPENDIX I

AMEC 2013 Transmission Line Alignments Baseline Survey Report

CÔTÉ GOLD PROJECT
TERRESTRIAL ECOLOGY BASELINE STUDY
FOR THE PROPOSED TRANSMISSION LINE ALIGNMENT

Submitted to:
IAMGOLD Corporation
401 Bay Street, Suite 3200
Toronto, Ontario
M5H 2Y4

Submitted by:
AMEC Environmental & Infrastructure,
a Division of AMEC Americas Limited
160 Traders Blvd., Suite 110
Mississauga, Ontario
L4Z 3K7

November 2013

TC121522

TABLE OF CONTENTS

PAGE

GLOSSARY AND ABBREVIATIONS ..... **v**

EXECUTIVE SUMMARY **1**

1.0 Introduction **1-1**

1.1 Overview of the Côté Gold Project 1-1

1.2 Objective and Scope 1-2

1.3 General Setting 1-3

1.4 General Methodology 1-4

1.5 Species at Risk and Provincially Rare Species 1-4

1.6 Migratory Birds Convention Act and Fish and Wildlife Conservation Act 1-5

2.0 METHODOLOGY **2-1**

2.1 Existing Information Review 2-1

2.2 Natural Areas and Wildlife Concentration Areas 2-3

2.3 Vegetation Community Mapping and Plant Inventory Surveys 2-3

2.3.1 Classification of Forest Habitat Types 2-4

2.3.2 Classification of Wetland Habitat Types 2-4

2.4 Wildlife Surveys 2-6

2.4.1 Birds 2-6

2.4.2 Mammals 2-8

2.4.3 Reptiles and Basking Turtles 2-13

2.4.4 Amphibians 2-13

2.4.5 Species at Risk and Provincially Rare Species 2-14

3.0 RESULTS **3-1**

3.1 General Site Description 3-1

3.2 Vegetation Community and Ecosite Classification 3-1

3.2.1 Upland Deciduous/Mixedwood Forest 3-9

3.2.2 Upland Coniferous Forest 3-11

3.2.3 Wetland Deciduous Swamp 3-13

3.2.4 Wetland Coniferous Swamp 3-13

3.2.5 Non-forested Wetland Communities 3-15

3.2.6 Other Communities 3-16
3.3 Wildlife 3-16
3.3.1 Birds 3-16
3.3.2 Mammals 3-24
3.3.3 Amphibians and Reptiles 3-33
3.3.4 Invertebrates 3-34
3.4 Species at Risk and Provincially Rare Species 3-39
3.4.1 Confirmed Avian Species at Risk 3-39
3.4.2 Unconfirmed Avian Species at Risk 3-43
3.4.3 Confirmed Mammal Species at Risk 3-45
3.4.4 Unconfirmed Mammal Species at Risk 3-46
3.4.5 Reptile Species at Risk 3-46
3.4.6 Invertebrate Species at Risk 3-47
4.0 EVALUATION AND DISCUSSION 4-1
4.1 Environmental Indicators 4-1
4.2 Species at Risk and Rare Wildlife 4-1
4.3 Ecological Functions 4-2
4.3.1 Significant Wildlife Habitat and Linkages 4-2
4.4 Environmental Constraints and Sensitivities 4-16
4.4.1 Avoidance of Effects to Species at Risk 4-16
4.4.2 Avoidance of Major Tree Clearing During the Breeding Bird Season 4-18
5.0 CONCLUSION 5-1
6.0 CLOSURE 6-1
7.0 REFERENCES 7-1

LIST OF TABLES

PAGE

Table 2-1: Existing Data Sources 2-1
Table 3-1: Vegetation Communities Occurring within the Regional Study Area 3-1
Table 3-2: Compiled Plant Species List 3-4
Table 3-3: Compiled Bird Species List 3-17
Table 3-4: 2013 Breeding Bird Survey Results 3-21
Table 3-5: Nests Observed During the Spring Aerial Survey 3-24
Table 3-6: Compiled Mammal Species List 3-25
Table 3-7: Mammal and Mammal Track Observations During 2013 Aerial Surveys 3-26
Table 3-8: Results of 2013 Survey of Abandoned Mines as Suitable Bat Hibernacula 3-27
Table 3-9: Results of 2013 Bat Maternity Roost Habitat Suitability Assessment 3-30
Table 3-10: Results from 2013 May - June Bat Acoustic Surveys 3-31
Table 3-11: Results from 2013 August - September Bat Acoustic Surveys 3-32
Table 3-12: Compiled Amphibian and Reptile Species List 3-34
Table 3-13: Compiled Invertebrate Species List 3-35
Table 3-14: Species at Risk and Provincially Rare Species in the Local Study Area 3-40
Table 4-1: Seasonal Concentration Areas of Animals 4-4
Table 4-2: Rare Vegetation Communities 4-7
Table 4-3: Specialized Habitat for Wildlife 4-10
Table 4-4: Habitat for Species of Conservation Concern 4-15
Table 4-5: Animal Movement Corridors 4-17

LIST OF FIGURES

Figure 1-1: Project Location
Figure 1-2: Preliminary Site Plan
Figure 1-3: Proposed Transmission Line Alignments
Figure 1-4: Transmission Line Study Area
Figure 2-1: Vegetation Survey Locations
Figure 2-2: Aerial Survey Transect Lines
Figure 2-3: Bird Survey Locations
Figure 2-4: Bat Habitat and Acoustic Survey Locations
Figure 2-5: Basking Turtle Survey Locations
Figure 3-1: Vegetation Communities
Figure 3-2: Aerial Survey Results for Raptors
Figure 3-3: Aerial Survey Results for Moose
Figure 3-4: Aerial Survey Results, Observed Clear-cuts and Regeneration Areas
Figure 3-5: Aerial Survey Results for Black Bear
Figure 3-6: Aerial Survey Results for White-tailed Deer and Wolf
Figure 3-7: Aerial Survey Results for Other Mammals
Figure 3-8: Species at Risk Observations

LIST OF APPENDICES

Appendix I: Details of Field Surveys Undertaken in 2013
Appendix II: Photos of Bat Detector Set-ups
Appendix III: Examples of the Bat Acoustic Analysis
Appendix IV: Photographs of Vegetation Communities
Appendix V: Photographs of Study Area from the Winter and Spring Aerial Surveys
Appendix VI: Site-specific Results And Discussion of Bat Acoustic Activity Survey
Appendix VII: Communications with the Ministry of Natural Resources
Appendix VIII: Field Data Sheets

GLOSSARY AND ABBREVIATIONS

AMEC	AMEC Environment & Infrastructure
cm	centimetres
COSSARO	Committee on the Status of Species at Risk in Ontario
COSEWIC	Committee on the Status of Endangered Wildlife in Canada
EA	Environmental Assessment
ELC	Ecological Land Classification
ESA	Endangered Species Act
FEC	Forest Ecosystem Classification
FRI	Forest Resources Inventory
FWCA	Fish and Wildlife Conservation Act
ha	hectare
km	kilometre
kV	kilovolt
LIO	Land Information Ontario
m	metre
MBCA	Migratory Birds Convention Act
MNDM	Ministry of Northern Development and Mines
MNR	Ministry of Natural Resources
NHIC	Natural Heritage Information Centre
OWES	Ontario Wetland Evaluation System
SAR	Species at Risk
SARA	Species at Risk Act
SWH	Significant Wildlife Habitat
TLA	Transmission Line Alignment
TMF	Tailings Management Facility
°C	degrees Celsius

EXECUTIVE SUMMARY

IAMGOLD Corporation is planning to develop the Côté Gold Project located approximately 20 kilometres (km) southwest of Gogama, 130 km southwest of Timmins and 200 km northwest of Sudbury. This document is one of a series of physical, biological and human environment baseline reports to describe the current environmental conditions at the Côté Gold Project Site. These baseline reports are written with the intent to support the Environmental Assessment process.

AMEC Environment & Infrastructure carried out 2013 biological baseline studies along two proposed transmission line alignment (TLA) options to support the federal and provincial environmental assessment efforts during 2013 for the selected TLA. This baseline environmental study documents the existing conditions of the terrestrial natural heritage features (natural areas, significant wildlife habitats, flora and fauna species, Species at Risk) present within the footprint of the proposed TLA alternatives and identifies potential Project constraints. The biophysical inventory comprised a review of existing information directly relevant to the local study area and regional study area, as well as a number of specific field surveys which were conducted during the winter, spring and summer of 2013. The existing information was used to obtain a general understanding of the biophysical site characteristics. Existing information on flora and fauna in the regional study area was used in the development of preliminary habitat delineations and in the design of species-specific surveys. Field surveys were completed between February 27 to March 1, April 16 to 17, and May 28 to June 18, 2013.

The regional study area is comprised of 33 distinct plant communities (upland and wetland). Upland deciduous / mixedwood forest, upland coniferous forest and wetland coniferous swamp communities co-dominate the regional study area. A total of 152 plant species were identified during field surveys. Of these, 97% are native to Ontario and none are listed provincially or federally as SAR. Upland forested and non-forested communities comprise 56.9% of the regional study area (43,805 ha). According to the FRI and LIO, wetlands cover 35% (26,693 ha) of the regional study area and include fen, shallow marsh, meadow marsh, swamp thickets and treed deciduous and coniferous swamp.

A total of 84 bird species were recorded within the local study area during standardized point counts surveys. Eleven additional bird species were recorded during the June field surveys, but not during standardized point counts. Although not identified during the breeding bird surveys, the presence of suitable habitat suggests 24 additional bird species identified in the records review are potentially breeding in the local study area. Of the 124 total species identified through the review of background information and field surveys, 117 total bird species are expected to be breeding or potentially breeding within the local study area. Eighty-seven of the 117 (74.4%) bird species are seasonal migrants, occurring in northern Ontario only during the summer breeding season. The five most common birds include the Nashville Warbler, Ovenbird, White-throated Sparrow, Magnolia Warbler and Red-eyed Vireo. Four avian SAR were

observed during the 2013 field surveys, including Bald Eagle, Canada Warbler, Common Nighthawk and Olive-sided Flycatcher.

Evidence of Moose was observed throughout the local study area including 21 individual sightings during the winter aerial survey and one sighting during the spring aerial survey. In May and June, moose were commonly observed incidentally along Highway 144 and Highway 560 and as well as at various other roadsides. Winter moose sightings and tracks were typically associated with clearcuts and regenerating forests, particularly those dominated by poplar and abundant young saplings that provide a food source to moose.

During the May and June ground surveys, Black Bears were commonly observed at roadsides near the local study area and at points along the existing Shiningtree TLA. Wolf tracks were observed at low to medium densities. During the winter aerial survey, all wolf tracks were restricted to the Shiningtree TLA, south of where it splits from the Cross-Country TLA; however, during the spring aerial surveys, observed tracks were equally distributed between both TLAs.

Bat acoustic surveys confirmed the presence of the Little Brown Bat (SAR: *Endangered*), Silver-Haired Bat and the Hoary Bat within the local study area. No exposed bedrock containing suitable hibernacula features for bats was identified during ground surveys and karst geology is not present within the local study area suggesting it is unlikely that natural bat hibernacula exist. Surveys were conducted for bat maternity roost sites throughout the study area but no significant roosting habitat was found (no survey sites exceeded the MNR cavity density level of 10 cavity trees per hectare).

Seven species of amphibians were documented including Green Frog, American Toad, Northern Leopard Frog, Spring Peeper, Wood Frog, Mink Frog and Four-toed Salamander. The most abundant amphibian detected was the Spring Peeper, which was ubiquitous throughout the local study area.

Two reptile species were identified in the review of the MNR's Ontario Herpetofaunal Atlas as occurring within the vicinity of the regional study area; Eastern Gartersnake and Midland Painted Turtle. Of these two species, only Eastern Gartersnake was observed during field surveys. One Snapping Turtle (SAR: *Special Concern*) was observed along Highway 144 near La Motte Lake Provincial Park.

Based on a review of secondary source information, consultation with the MNR and baseline field studies, 12 SAR were identified as occurring or potentially occurring within the vicinity of the regional study area, including nine bird species, two mammal species and one reptile species. The 2013 field surveys recorded seven SAR within the local study area (Little Brown Bat, Bald Eagle, Canada Warbler, Common Nighthawk, Olive-sided Flycatcher, Rusty Blackbird and Snapping Turtle). Detailed habitat descriptions and documented occurrences of SAR within the local study area are provided in the report.

Additionally, 10 provincially rare species were identified in the secondary source review as potentially occurring in the vicinity of the regional study area: Moustached Clubtail, Boreal Snaketail, Rusty Snaketail, Kennedy's Emerald, Southern Cloudy Wing, Old World Swallowtail, Western White, Large Marble, Purplish Copper and Red-disked Alpine. However, no provincially rare species were recorded within the local study area.

1.0 INTRODUCTION

IAMGOLD Corporation (IAMGOLD) is planning to develop the Côté Gold Project (the Project) located approximately 20 kilometres (km) southwest of Gogama, 130 km southwest of Timmins and 200 km northwest of Sudbury (see Figure 1-1).

This document is one of a series of physical, biological and human environment baseline reports to describe the current environmental conditions at the Côté Gold Project Site. These baseline reports are written with the intent to support the Environmental Assessment process.

Several consultants have been involved in the baseline data collection and the preparation of the reports, namely AMEC Environment & Infrastructure, Golder Associates, Minnow Environmental and Woodland Heritage.

1.1 Overview of the Côté Gold Project

IAMGOLD is planning to construct, operate and eventually reclaim a new open pit gold mine. The proposed site layout places the required mine-related facilities in close proximity to the open pit, to the extent practicable. The proposed site layout is presented in Figure 1-2 showing the approximate scale of the Côté Gold Project. The site plan will be refined further as a result of ongoing consultation activities, land purchase agreements and engineering studies.

As part of the proposed development of the Project, several water features will be fully or partially overprinted. These include Côté Lake, portions of Three Duck Lakes, Clam Lake, Mollie River/Chester Lake system and Bagsverd Creek. As a consequence, these water features will need to be realigned for safe development and operation of the open pit.

The major proposed Project components are expected to include:

- open pit;
- ore processing plant;
- maintenance garage, fuel and lube facility, warehouse and administration complex;
- construction and operations accommodations complex;
- explosives manufacturing and storage facility (emulsion plant);
- various stockpiles (low-grade ore, overburden and Mine Rock Area) in close proximity to the open pit;
- aggregate extraction with crushing and screening plants;
- tailings management facility;
- on-site access roads and pipelines, power infrastructure and fuel storage facilities;

- potable and process water treatment facilities;
- domestic and industrial solid waste handling facilities (landfill);
- water management facilities and drainage works, including watercourse realignments; and
- transmission line and related infrastructure.

1.2 Objective and Scope

IAMGOLD has retained AMEC Environment & Infrastructure, a Division of AMEC Americas Limited (AMEC), to carry out biological baseline studies along two proposed transmission line alignments (TLAs) and to support the federal and provincial environmental assessment efforts during 2013 for the selected TLA. IAMGOLD is currently considering the following two alignment options (only one will be chosen) to feed power to the proposed Project:

- an eastern TLA identified as the Shiningtree Alignment, that follows 118.4 km of an existing 115 kV TLA from the City of Timmins to the Shiningtree Substation and then travels west for 40.2 km to the Project site (total = 158.6 km; see Figure 1-3); and
- a western TLA identified as the Cross-Country Alignment, that follows 45.9 km of the same existing 115 kV TLA from the City of Timmins and then travels southwest for 71.5 km to the Project site (total = 117.4 km; see Figure 1-3).

The local study area consists of areas located within 1 km of the centerline of each of the two TLA alternatives, and the regional study area consists of areas located within 2 km of each TLA alternative (see Figure 1-4). This baseline environmental study documents the existing conditions of the terrestrial natural heritage features (natural areas, significant wildlife habitats, flora and fauna species, Species at Risk) present within the footprint of the proposed TLA alternatives and identifies potential Project constraints.

At this time it is not anticipated that field investigations of the watercourse crossings associated with the TLAs would be required, as it is assumed that all crossings will be fully spanned (clear spanned) and as such there will be no direct footprint of the TL within the watercourses (or wetlands). Baseline information pertaining to the terrestrial natural resources present within the Project site is covered in a separate report (Golder, 2013).

Baseline information pertaining to detailed site area geology, physiography, climate, surficial geology and soils, surface and groundwater hydrology, water quality, sediment and soil characteristics, fisheries and aquatic resources, heritage and archaeological resources, and land use are also covered in separate reports unless pertinent to terrestrial environmental resources.

In order to proceed with Project development a number of approvals and authorizations will be required from the provincial government and possibly the federal government. As part of this approval and authorization process, the proponent is required to prepare an environmental baseline study to document pre-development conditions, including consideration of the natural environment and human use features. Such requirements are embodied in provincial legislation that includes: the *Ontario Mining Act, 1990*; the *Ontario Water Resources Act, 1990*; the *Ontario Environmental Protection Act, 1990*; and the *Ontario Planning Act*. Federal approvals and authorizations may also be required pursuant to the Canadian *Fisheries Act, 1985* and the *Canadian Environmental Assessment Act, 1992*. Municipal involvement is legislated through the provisions outlined in the *Ontario Planning Act*.

The *Ontario Mining Act* covers all phases of mineral exploration and development. As such, the *Ontario Mining Act* Reg. 240/00 (for closure planning) requires the proponent to provide information on the pre-development condition of the site prior to undertaking mine development. This information includes consideration of the site area geology, physiography, climate, surface and groundwater hydrology, water quality, sediment and soil characteristics, plant communities, wildlife, fisheries and aquatic resources, heritage and archaeological resources and land use.

The *Ontario Water Resources Act*, *Ontario Environmental Protection Act* and *Ontario Planning Act* are less specific in their requirements for environmental baseline studies. However, all of these acts and their associated regulations, guidelines and policies stipulate that relevant aspects of the natural and/or human use environments are to be protected against contamination and undue disturbance from industrial and other sources, except as provided through the granting of permits, approvals and authorizations. In order to demonstrate compliance with these requirements it is necessary to have an accurate description of predevelopment environmental conditions.

In addition to aspects relating to regulatory requirements, environmental baseline data are also needed to assist in Project planning, including consideration of requirements for mining, processing, overburden stockpiling, waste rock disposal, waste water management, water supply, infrastructure development and other functions.

1.3 General Setting

The Project is located in the Chester and Neville Townships, District of Sudbury, in northeastern Ontario, approximately 20 km southwest of Gogama, 130 km southwest of Timmins and 200 km northwest of Sudbury (see Figure 1-1). The property lies in the Timmins District, within the Ministry of Natural Resources' (MNR) Northeastern Region administrative boundary. The designated land uses for the district are primarily related to natural resource utilization. The mining activities in the mine area are consistent with the Timmins District land use guidelines, which include exploration and development of mineral and aggregate resources.

The terrain is considered to be rolling with pockets of forest. The region is characterized by bedrock with discontinuous thin layers of soil. The terrain is interspersed with rock knobs and ridges, eskers and other outwash deposits. Much of the area is dominated by sand and gravel with a small amount of silt and clay and some sand to silty-sand till deposits. (MNDM, 2012).

Generally, the landscape comprises a mosaic of deciduous, coniferous and mixed forest ecosites, open and treed peatland, shrub and treed swamps, marshes and open barren rock. The upland forests have a history of forestry operations and are in various stages of re-growth. Wildlife and vegetation species in the area are generally typical of those inhabiting the broader mixed and boreal forests of northern Ontario. The area experiences cold winters and warm summers; mean daily temperatures vary from a low of -17.5°C in January to a high of 17.4°C in July (Environment Canada, 2013).

1.4 General Methodology

Baseline data were gathered using the standard approaches of literature review, observation, sample collection, data analysis and discussions with the MNR.

There is a limited amount of terrestrial resource information currently available for the regional study area. As such, AMEC conducted a comprehensive terrestrial field program to complement existing information from the region and provide qualitative and quantitative information on wildlife and vegetation communities within the regional study area. Generally, the various baseline studies focus on new information collected by AMEC, but where appropriate, historic data have been included to provide broader context and to show longer-term trends.

Despite the generation of separate baseline reports for each environmental discipline (e.g., terrestrial, geological, hydrogeological, hydrological, *etc*.), an ecosystem perspective has been used to integrate the data into functional relationships where appropriate, as it is recognized that the entire physical, chemical and biological system (e.g., the ecosystem) is interconnected. For example, surface water systems are connected to groundwater systems, which in turn are affected by climate, geology, soils and general aspects of the terrain. The expression of surface water systems in terms of water flow, water quality and riverbed/creek bed materials, affects the presence and abundance of wildlife.

1.5 Species at Risk and Provincially Rare Species

This terrestrial baseline study considered the presence of Species at Risk (SAR) protected under federal and provincial legislation and related instruments. SAR are plant or animal species whose individuals or populations are considered *Extirpated*, *Endangered*, *Threatened*, or of *Special Concern* in Ontario and Canada, as determined by the provincial Committee on the Status of Species at Risk in Ontario and the federal Committee on the Status of Endangered Wildlife in Canada. SAR and any activities within their critical habitat are regulated by the

Ontario's *Endangered Species Act, 2007* (ESA) and the federal *Species at Risk Act, 2003* (SARA).

Under the provincial ESA, if a species is listed as *Extirpated*, *Endangered* or *Threatened*, Section 9 of the *Act* prohibits killing, harming, harassing, capturing, taking, possessing, collecting, buying, selling, leasing, trading or offering to buy, sell, lease or trade a member of the species. Similarly, if a species is designated as *Endangered* or *Threatened*, Section 10 of the *Act* prohibits damaging or destroying the habitat of the species. This prohibition also applies to an *Extirpated* species if the species is prescribed by the regulations. The regulations may specifically prescribe an area as the habitat of a species; but, if no habitat regulation is in force with respect to a species, "habitat" is defined to mean an area on which the species depends, directly or indirectly, to carry on its life processes.

Under SARA, wildlife considered SAR have been listed under either Schedules 1, 2, or 3. Schedule 1 species are those that have had their status reports reviewed by an official panel and are currently accepted with the Committee on the Status of Endangered Wildlife in Canada designation, granting them full protection by SARA. Schedule 2 species are species that must have their status reviewed within 30 days of being posted to the schedule and Schedule 3 species are species that must have their status reviewed within one year of being posted. On private land, these prohibitions apply only to listed aquatic species and migratory birds that are also listed in the *Migratory Birds Convention Act*, *1994* (MBCA). In Ontario, the federal SARA only applies on federal lands and defers the responsibility of regulating SAR on private and provincial crown lands to the ESA.

1.6 Migratory Birds Convention Act and Fish and Wildlife Conservation Act

All migratory birds listed under the MBCA are protected. The MBCA prohibits harming and/or killing these birds and/or destroying or collecting their eggs or nests, but does not protect their habitat. The *Fish and Wildlife Conservation Act,* 1997 (FWCA) protects several species of birds, in particular raptors and other species such as blackbirds not listed in the MBCA. The FWCA also protects certain amphibians, reptiles and mammals from hunting, or the collection of their eggs. The FWCA prohibits the destruction of bear dens and/or the dens of furbearing animals such as American Marten (*Martes americana*), Fisher (*Martes pennanti*), Canada Lynx (*Lynx canadensis*), River Otter (*Lontra canadensis*), American Mink (*Mustela vison*) and Least Weasel (*Mustela nivalis*), as well as the destruction of Beaver (*Castor canadensis*) dams, unless a trapper's license is obtained.

2.0 METHODOLOGY

From February to June, 2013, AMEC undertook several surveys as part of a comprehensive biophysical inventory of the regional study area to characterize and evaluate the existing biophysical environment and to provide baseline data as input to pre-Project conditions and to support the design and permitting of the Project. The biophysical inventory comprised a review of existing information directly relevant to the regional study area, as well as a number of specific field surveys which were conducted during the winter, spring and summer of 2013. The existing information was used to obtain a general understanding of the biophysical site characteristics. Existing information on flora and fauna for the regional study area was used in the development of preliminary habitat delineations and in the design of species-specific surveys. Field surveys were completed between February 27 to March 1, April 16 to 17, and May 28 to June 18, 2013. Survey dates, times, weather conditions and field personnel are summarized in Appendix I.

2.1 Existing Information Review

Material relevant to the biophysical inventory of the regional study area was identified at the start of the inventory and reviewed. Reviewed documents are presented in Table 2-1 together with a brief synopsis of the key content and relevance of the individual source to the Project. The reports provide information with respect to biophysical site characteristics, habitat, wildlife, rare species and communities and general cultural/historic aspects of the regional study area.

Table 2-1: Existing Data Sources

Organization	Data Type	Natural Features/Values
Ontario Ministry of Natural Resources - Natural Heritage Information Centre	Database search – element occurrences	Lists and locations of ANSI's, PSW's and ESA's, lists provincial ranks for species and plant communities
Bird Studies Canada, Environment Canada, Ontario Field Ornithologists, Ontario Ministry of natural Resources and Ontario Nature	Atlas of the Breeding Birds of Ontario, 2001-2005	Avian breeding records and occurrences
EBird.org	Database search – observation locations	Presence and location of avian records, particularly SAR
Ontario Ministry of Natural Resources – Natural Heritage Information Centre	Ontario Herpetofaunal Summary Atlas	Amphibian and reptile species occurrences and conservation ranks
Ontario Ministry of Northern Development and Mines	Database Search – Abandoned Mines, Bedrock Geology	Potential bat hibernacula
Federation of Ontario Naturalists	Atlas of the Mammals of Ontario	Mammal species lists
Ontario Ministry of Natural Resources - Natural Heritage Information Centre	Ontario Odonate Atlas	Dragonfly and damselfly species occurrences and conservation ranks

Organization	Data Type	Natural Features/Values
Ontario Ministry of Natural Resources	2012 – 2022 Forest Management Plan for the Spanish Forest (MNR, 2010a)	Presence and Locations of: • Moose aquatic feeding Areas • Moose, Deer and Caribou wintering areas • Raptor, Heron, Waterfowl, Heron nesting sites • Deer, Waterfowl staging areas • Mast producing areas • Mineral licks • SAR habitat • Movement corridors
	2012 – 2022 Forest Management Plan for the Abitibi River Forest (MNR, 2010b)	
	2011 – 2021 Forest Management Plan for the Pineland Forest (MNR, 2011a)	
	2011 – 2021 Forest Management Plan for the Timiskaming Forest (MNR, 2011b)	
Toronto Entomologists Society	Ontario Butterfly Atlas	Butterfly species occurrences and conservation ranks
Environment Canada - *Migratory Birds Convention Act*	Bird species list that fall under this Act	Avian species lists
Environment Canada - *Fish and Wildlife Conservation Act*	Wildlife that falls under this Act	Wildlife species lists
Environment Canada	*Species at Risk Act* and wildlife that fall under this Act	SAR lists

Notes: ANSI – Area of Natural and Scientific Interest.
PSW – Provincially Significant Wetland.

Database searches were undertaken to ascertain species, including SAR, potentially present within or adjacent to the regional study area. These resources included a review of the MNR's Natural Heritage Information Centre (NHIC) database (MNR, 2013a), the Atlas of the Breeding Bird of Ontario (Cadman *et al.*, 2007), eBird.org (Audubon and Cornell Lab of Ornithology, 2013) the Atlas of the Mammals of Ontario (Dobbyn, 1994), the Ontario Herpetofaunal Summary Atlas (Oldham and Weller, 2000), the Ontario Butterfly Atlas (Toronto Entomologists Society, 2012) and the Ontario Odonata Atlas (Ontario Odonata Atlas, 2005). The NHIC database and the Atlas of the Breeding Bird of Ontario utilize a 10 km x 10 km system whereby species documented within a specific square can be used to generate a list of species potentially present within a given area. In this case, the regional study area overlaps 28 atlas squares. The lists of mammals and herpetofauna which may be found in the regional study area were similarly generated; however, these resources are not available in a database. Instead, the potential presence of these species within the 10 km x 10 km squares was extrapolated based on inventory mapping provided within each atlas.

Suitable survey methods for ascertaining the presence of SAR species were included in the site inventory methodologies presented below.

2.2 Natural Areas and Wildlife Concentration Areas

Natural Areas are areas identified as having significant or unique natural heritage features. Natural Areas listed in the NHIC Natural Areas Database may be identified by the MNR, Conservation Authorities, the International Biological Program or by non-governmental organizations such as the Federation of Ontario Naturalists, the Nature Conservancy of Canada or Bird Studies Canada. Natural areas include evaluated wetlands, Earth and Life Science Areas of Natural and Scientific Interest, provincial and national parks, Conservation Areas, International Biological Program Sites and nature reserves. In addition, the MNR's Land Information Ontario (LIO) database provides information on Provincially Significant Wetlands and other unevaluated wetlands.

Wildlife Concentration Areas are areas having significant importance to wildlife during a critical component of their life history. Wildlife Concentration Areas include Moose Late Winter Habitat, Bat Hibernaculum/Nursery, Colonial Waterbird Nesting Area, Freshwater Mussel Concentration Area, Mixed Wader Nesting Colony, Raptor Winter Concentration Area, Shorebird Migratory Concentration Area and Waterfowl Concentration Area.

To determine the presence of Natural Areas and Wildlife Concentration Areas within the regional study area, a review of the NHIC and LIO databases was undertaken. In addition, the MNR was consulted to determine the presence of any occurrences not available through a review of the NHIC and LIO databases.

2.3 Vegetation Community Mapping and Plant Inventory Surveys

The regional study area is located in the northeastern region of Ontario in Ecoregion 3E (Lake Abitibi Ecoregion). The vegetation in this ecoregion is boreal, with Black Spruce (*Picea mariana*), White Spruce (*Picea glauca*), Balsam Fir (*Abies balsamea*), Jack Pine (*Pinus banksiana*), Tamarack (*Larix laricina*), White Birch (*Betula papyrifera*), Trembling Aspen (*Populus tremuloides*) and Balsam Poplar (*Populus balsamifera*) constituting the main forest species. Species characteristic of the more southerly Great Lakes–St. Lawrence Forest Region, such as Eastern White Pine (*Pinus strobus*) and Red Pine (*Pinus resinosa*), grow on sandy ridges and other warmer-than-normal sites and now tend to be found only in small, isolated pockets. (Crins *et al.*, 2009).

Forest Resource Inventory (FRI) mapping for vegetation communities within the regional study area (MNR, 2010c) was obtained from the MNR prior to undertaking field surveys. Vegetation surveys were conducted on May 31, June 1 and from June 6 to June 15 and focused on stratifying efforts between community types by traversing between a series of scattered waypoints (see Figure 2-1). Approximately 170 vegetation community polygons were visited. During the vegetation surveys, the study team recorded any signs of wildlife or wildlife activity encountered.

2.3.1 Classification of Forest Habitat Types

Forest habitat types in Ecoregion 3E have typically been described using the Field Guide to Forest Ecosystems of Northeastern Ontario (Taylor *et al.*, 2000) commonly referred to as the Forest Ecosystem Classification of Northeastern Ontario (FEC). However, the Ecological Land Classification (ELC) Working Group has recently introduced the Boreal Ecosites of Ontario (Boreal ELC; ELCWG, 2009) which are a valuable tool for determining the presence of potential significant wildlife habitat (MNR, 2012a). The FEC mainly classifies mature, undisturbed forests whereas the Boreal ELC classifies forests as well as other vegetation types such as wetlands (non-forested), cliffs, rock barrens and communities created by human disturbance (cultural areas).

An FEC ecosite code was assigned to each forested polygon identified through FRI mapping. Ecosite determination depends partially on vegetation communities and the classification of soils based on the Ontario Institute of Pedology's Field Manual for Describing Soils in Ontario (OIP, 1993). Soil classifications were not undertaken as a component of the vegetation community analysis. However, through vegetation species composition, an understanding of the soil composition in the area (Ecoregion 3E; Crins *et al.*, 2009) and as determined by a review of soils mapping, probable FEC ecosites can be extrapolated given the range of soil parameters within ecosites. A plant species inventory was taken for each ecosite code and the community was documented with photographs (Appendix IV). Scientific names for plant species are based on the current nomenclature as listed in the MNR's NHIC database (MNR, 2013a). ecosite codes were later translated to Boreal ELC codes (B-codes) using guides created by the MNR (Lalonde *et al.*, 2012; Pokharel *et al.*, 2012) and soil information obtained through the MNR LIO map database (MNR, 2013b).

2.3.2 Classification of Wetland Habitat Types

Wetlands can be described using the Ontario Wetland Evaluation System (OWES) for northern Ontario as well as the Boreal ELC. Wetlands are classified to the ecosite level as fen, bog, swamp, marsh and shallow water (although often combined with marsh-type) and are characterized by dominant vegetation form.

Wetlands were identified through a combination of FRI and LIO mapping. Forested polygons which were assigned a B-code indicative of a swamp community (through the FRI – ecosite determination methodology described above) were considered to be wetlands and given an appropriate OWES code. For those vegetation polygons which were considered to be wetlands, as determined using the LIO wetland unit vector polygon layer, a multi-spectral image classification remote sensing technique was employed to determine wetland type, as described below.

2.3.2.1 Classification Set-up

In order to classify all of the 1,734 LIO wetland areas within the regional study area a multi-spectral image classification remote sensing technique was employed. Field survey data collected indicated 6 different OWES classes of wetlands within the regional study area, namely 2 low shrub fens (low shrub fen, 19 ground truth areas; and, low shrub fen with a secondary coniferous layer [>10% and <25% tree cover], 12 ground truth areas), tall shrub swamp (17 ground truth areas), coniferous swamp (9 ground truth areas), robust emergent marsh (1 ground truth area) and narrow-leaf emergent marsh (18 ground truth areas). Multi-spectral LANDSAT5 TM satellite imagery was collected for the entire regional study area. The multi-spectral band images were compiled into an image stack containing six multi-spectral reflectance bands including band 1 (visible blue), band 2 (visible green), band 3 (visible red), band 4 (near infrared), band 5 (mid-infrared) and band 7 (mid-infrared). The ground truth wetland areas for each wetland class were used to create sample training areas on the multi-spectral image stack in order to create statistical summaries of the multi-spectral reflectance characteristics for each of the 6 wetland types. The spectral reflectance patterns, or spectral signatures, developed from these sample training areas were used to classify all wetland areas in the regional study area.

2.3.2.2 Classification Procedure

The MNR LIO wetland unit vector polygon layer was used to extract all wetland features from the multi-spectral image stack for the entire regional study area. The new image stack, which only contained wetland features, was the image used for the classification procedure. The spectral signature summary statistics gathered from the sample training data was applied to the image stack using a maximum likelihood classification algorithm. This classification technique uses the digital number reflectance averages and variance information to assess the probability for each pixel in the image stack belonging to one of the six wetland classes defined by the sample training area data. Each pixel in the image stack was classified as one of the six wetland types based on the spectral signature data.

Many wetland areas had several types of wetlands classes associated with the delineated area due to spectral response pattern reflectance mixing, which can confuse the maximum likelihood algorithm when attempting to produce “pure” wetland types. The nature of wetlands also played a role in pixel classification error due to the complex interrelationships between vegetation types, open water and exposed soil which have very different spectral reflectance patterns and can lead to many mixed reflectance pixel results making it difficult to classify large delineations into single wetland classes.

A “majority rules” procedure was applied to the wetland unit delineation where the wetland was given the full classification based on the majority of classified pixels within its boundary. For example, a wetland unit polygon that had 65 pixels classified as coniferous swamp, 23 pixels classified as coniferous fen and 7 pixels classified as low shrub fen would have been given the wetland class “coniferous swamp”. Visual inspection of these wetland classifications was

conducted for approximately 10% of all wetland polygons within the regional study area. It was confirmed that the image classification remote sensing technique produced satisfactory results for the regional study area. These OWES codes were later matched with appropriate B-codes.

2.4 Wildlife Surveys

Specific wildlife surveys were undertaken in the winter, spring and summer of 2013 with the aim of confirming the presence/absence and habitat utilization of breeding birds, amphibians, reptiles, mammals and invertebrates (e.g., butterflies, dragonflies and damselflies). Incidental wildlife observations (based on tracks, calls and scat) were also recorded during the vegetation surveys. Wildlife habitat features were identified, including snags, burrows and other habitat features that may be important to wildlife. Particular attention was focused on documenting any federally or provincially designated species as listed under the ESA or SARA.

2.4.1 Birds

Species-specific bird surveys were conducted throughout the breeding season. Distinct methods were applied based on the groups of species targeted.

2.4.1.1 Spring Aerial Stick Nest Survey

A spring aerial survey for stick nests was undertaken on April 17 and 18, 2013. The aerial survey involved flying five north-south transects along the Transmission Line (TL) common to both proposed Transmission Line Alignments (TLAs) that were 50 km long and spaced at 500 m intervals, five north-south transects exclusively along the Cross-Country TLA that were 71.5 km long and spaced at 500 m intervals, and five north-south transects exclusively along the Shiningtree TLA that were 72.5 km long and also spaced at 500 m intervals, for a total flight distance of 950 km (see Figure 2-2). Transect lines provided 100% coverage of habitat within a 1 km buffer on either side of the proposed and alternative transmission lines. The aerial surveys were undertaken with a Eurocopter AS350 (A-Star) helicopter. The airspeed traveled during surveys was approximately 70 to 80 km/hr at an elevation of approximately 100 to 150 ft (30 to 45 m). Waypoints for the start and end of the survey lines were prepared and provided to the pilot for navigation.

Weather conditions during the survey were fair to excellent with unlimited visibility. Winds ranged from calm to moderate with no precipitation to light rain. Observers sat on both sides of the aircraft in the back seats and sightings of all stick nests or birds were called out on the intercom system and recorded by a third observer siting in the front of the helicopter. Due to fresh snow fall and warm temperatures the day before aerial surveys, only fresh mammal tracks could be identified in the remaining 40 cm (1.3 ft) snow base.

The MNR (2010b) defines active nests as those with a high likelihood of reuse and includes those known or suspected to have been occupied at least once during the past five breeding periods unless the nest and all associated nests within the nesting area have been documented

as unoccupied for ≥ 3 consecutive breeding periods. All other nests are classified as inactive. During the aerial survey, nests which were occupied by adults incubating eggs or by unattended eggs were identified as 'active' and all other nests were identified as being 'inactive at the time of survey'. For Project planning, all identified nests should be treated as active unless they are in an extremely poor state of repair.

2.4.1.2 Breeding Bird Surveys

Breeding bird surveys followed the protocols described for the Atlas of Breeding Birds of Ontario (Cadman *et al.*, 2007) and the Forest Bird Monitoring Program (Environment Canada, Canadian Wildlife Service). These surveys target the majority of forest breeding birds. Two rounds of bird surveys were conducted by two qualified biologists skilled in the identification of birds by sight and sound. Surveys were initiated prior to sunrise and extended to five hours after sunrise, depending on the weather conditions. Point count surveys were aborted or postponed if weather conditions were not optimal (high winds or light rain). Surveys were conducted for 10 minutes at each listening station as recommended by Environment Canada (instead of the five minute listening period outlined in the Atlas of Breeding Birds of Ontario) and consisted of recording the diversity and density of bird species. Bird observations were recorded at four distance regimes: within 50 m; 50 to 100 m; outside 100 m; and flyovers (birds seen flying overhead).

A total of 182 point count stations were established in a range of habitats and vegetation communities (e.g., deciduous forest, mixed forest, coniferous forest, bog and swamp; see Figure 2-3). Point count stations were pre-determined in a using digital FRI imagery and stationed at least 300 m apart from each other. Stations were geo-reference in the field using a hand-held GPS unit with 5 m accuracy. The first round of surveys was conducted between May 29 and June 4 and the second round of surveys was conducted between June 8 and June 18, 2013. The sampling stations were surveyed in the reverse order from the first round (to the greatest extent possible) to reduce temporal sampling bias. Incidental sightings were documented, particularly for SAR and species not detected during standardized point counts.

2.4.1.3 Crepuscular Bird / Owl Surveys

Crepuscular bird surveys were conducted concurrently with amphibian surveys (described below; see Figure 2-3) on May 28 to June 1, 2013 and June 7 to 22, 2013. Surveys were conducted 30 minutes after sunset and did not go beyond midnight. The surveys were undertaken in accordance with specific survey protocol outlined in the *Whip-poor-will Roadside Survey Participant's Guide* (Bird Studies Canada, 2012), including being undertaken during nights when greater than 50% of the moon face was illuminated and weather conditions were optimal for detecting crepuscular birds (e.g., little cloud cover, low wind and no precipitation). Surveys involved listening for calling males which can be detected from several hundred metres away.

The owl breeding season varies by species but can begin as early as January and some young won't leave the nest until June. It is during this period that the animals are most vocal as they

are attempting to establish and defend territories. Surveys for this Project began after the optimum survey period for owls; however, calling owls were recorded while conducting crepuscular bird surveys (see Figure 2-3). Surveys involved listening for calling males which can be detected from several hundred metres away depending on the species.

2.4.1.4 Marsh Bird Surveys

Marsh bird surveys were undertaken at two marshes comprised of suitable emergent plant communities that could act to provide potential habitat for marsh birds (see Figure 2-3). These marshes were surveyed on June 19 and 20, 2013. Marsh bird surveys were also conducted opportunistically throughout the study area during the breeding bird surveys (May 29 to June 4 and June 8 to 18, 2013) and habitat classification surveys (May 31 to June 1 and June 6 to 15, 2013).

Marsh bird surveys were conducted in accordance with Bird Studies Canada's marsh bird survey protocols (Bird Studies Canada, 2009; Bird Studies Canada, 2012). Focused marsh bird surveys were conducted between sunrise and 10:00 am and were only conducted during suitable weather conditions (low wind, no rain). Survey stations were at least 250 m apart and a 15 minute survey was conducted at each location, using a 100 m radius semi-circle sampling area in which all birds seen or heard were recorded. Playback calls were used to try to elicit calls from the inconspicuous marsh bird species that tend to hide within the emergent vegetation.

2.4.1.5 Visual Surveys

Binocular searches were conducted daily throughout the entire study to identify probable nest site locations. Individuals displaying breeding behaviour such as agitated behaviour, or the maintenance of permanent territories (presumed through detection of a territorial song/call on at least two separate occasions, a week or more apart, in the same location), were used to report "probable" breeding activity. The presence of nests, young, or individuals carrying food was reported as "confirmed" breeding activity (Cadman *et al.*, 2007).

2.4.2 Mammals

2.4.2.1 Winter and Spring Aerial Survey

A winter aerial survey for mammals was undertaken on February 27, 28 and March 1, 2013, and a spring survey was conducted on April 16 and 17, 2013. The mammal aerial surveys involved flying the same transects as described in Section 2.4.1.1 for the spring aerial survey for stick nests (see Figure 2-2). Transect lines provided 100% coverage of habitat within a 1 km buffer on either side of the proposed and alternative transmission lines.

The February aerial survey was undertaken with a Bell 206L Long Ranger helicopter and the April surveys were conducted using a Eurocopter AS350 (A-Star) helicopter. The airspeed

traveled during each survey was approximately 70 to 80 km/hr at an elevation of approximately 100 to 150 ft (30 to 45 m). Waypoints for the start and end of the survey lines were prepared and provided to the pilot for navigation. Observers sat on both sides of the aircraft in the back seats and sightings of all stick nests or birds were called out on the intercom system and recorded by a third observer siting in the front of the helicopter.

Weather conditions during the February survey were fair to excellent with 10 km to unlimited visibility, calm to moderate winds and no precipitation to light snow. Tracks were readily detected on a base of snow 30 to 90 cm (1 to 3 ft) in depth. Weather conditions during the April survey were fair to excellent with unlimited visibility. Winds ranged from calm to moderate with no precipitation to light rain. Due to fresh snow fall and warm temperatures the day before the April aerial surveys, only fresh mammal tracks (within the past 15 – 20 hours) could be identified in the remaining 40 cm (1.3 ft) snow base.

2.4.2.2 Bat Maternity Roosting Habitat Surveys

Three habitat types for bats are recognized by the MNR: i) maternity colonies or maternity roosting habitat, ii) hibernacula and iii) migratory stopover areas (MNR, 2011c). Although bats are known to follow linear landscape features that offer suitable foraging and roosting habitat such as rivers and topographical elevations and depressions (Baerwald and Barclay, 2009), there is currently no known criteria to reliably identify migratory stopover areas. Therefore, no attempt was made to identify migratory stopover areas within the Project.

During the spring and early summer, most Ontario bat species rely on forest habitat that supports a healthy density of large-diameter cavity trees. Females form maternity colonies in tree cavities that provide a warm, humid microclimate that optimizes gestation and postnatal growth of offspring (Kunz and Anthony, 1982). Trembling Aspen is a tree species commonly found within the Project area and may provide suitable maternity roosting habitat by way of woodpecker holes in old trees suffering from heart-rot (Parsons *et al.,* 2003; Psyllakis and Brigham, 2006).

Surveys were conducted between May 28 and June 2, 2013 to determine whether the local study area contained suitable maternity roosting habitat for bats and special attention was given to the two *Endangered* species of Ontario bats (Little Brown Myotis and Northern Myotis). As the *Bats and Bat Habitats: Guidelines for Wind Power Projects* (MNR, 2011c) is currently the most comprehensive guideline for conducting bat surveys in Ontario, habitat survey methods were conducted in accordance with this document. Forest stands 80 years old or greater were identified within the Project area from desktop studies. Within identified old-age forest stands, circular plots with an area of 0.05 ha were surveyed for the presence of potential maternity roost trees. These included trees that had a large (≥ 25cm) diameter at breast height (dbh) and that exhibited one or more of the following features (in order of importance):

- contained habitable cavities originating from knots, woodpecker holes, cracks;

- had a large amount of loose peeling bark;
- were in an area where the canopy was relatively open; and
- were in an early stage of decay (decay class 1-3; Watt and Caceres, 1999).

Given the large size of the local study area, a sub-sampling regime was developed to ensure adequate coverage and representation of all habitat types. A total of 144 plots were surveyed (see Figure 2-4). With the exception of plots 3a-e, plots were arranged in 24 groups arrayed in two or four parallel lines of three. Plots within arrays were kept 100 - 250 m apart. The average number of potentially suitable roost trees per hectare was then calculated for each array and areas with potential roost tree densities equal to or greater than 10 trees per hectare were identified to be potential significant maternity roosting habitat for bats.

2.4.2.3 Bat Hibernacula Surveys

In August and September, bats congregate at the entrance of caves or mine shafts which are used as hibernacula during the winter (Norquay *et al.*, 2013). Suitable hibernacula maintain winter temperatures slightly above freezing, have constant air circulation, and relative humidity is high (Humphrey and Cope, 1976).

A number of rocky outcroppings and areas of exposed bedrock were identified in proximity to the Project area during aerial surveys. However, bedrock in the Project area is largely tonalite and granite (MNDM, 2013), hard stones that are less likely to harbour caves compared to softer stones such as limestone and sandstone which succumb easily to speleogenesis via dissolution. Very few natural bat hibernacula (e.g., natural caves) in Ontario and Canada are known. Confirmed and known caves in Ontario and Manitoba are primarily located in karst / limestone (Thomas *et al.*, 1979; Ford, 1961; Hitchcock *et al.*, 1984 and Bilecki, 2003). The only known natural bat hibernaculum in British Columbia is formed from sandstone. There is no known karst geology within the regional study area (MNDM, 2013). Additionally, most of the noted outcrops were reasonably far from the proposed transmission line to avoid negative effects to bats and access to these sites was deemed unfeasible or unsafe. In spite of these restrictions, a reasonable effort was made to locate potential hibernacula. Exposed bedrock was searched for within areas surveyed for bat maternity roosting habitat, in locations where acoustic bat surveys were conducted, and during all other vegetation and wildlife surveys. If areas of exposed bedrock were identified, they were examined carefully for cracks, crevices, sinkholes or any other features that might serve as suitable hibernacula.

A number of abandoned mine sites exist in proximity to the regional study area (MNDM, 2013; see Figure 2-4). A 320 m buffer from the edge of the Project footprint was used to identify mine sites potentially impacted by the Project. Most mines located outside of this buffer were excluded from further investigation though mines up to 200 m beyond the 320 m buffer edge that were easily accessible were also investigated. Of the 19 mines retained for investigation, eight consisted of trenches, open pits and mine rock dumping sites which are likely unsuitable

as bat hibernacula. Trenches and pits are unlikely to provide suitable hibernation habitat since all rock faces examined during other aspects of this baseline study revealed an absence of cracks and crevices deep enough to remain above freezing during winter and waste rock piles generally consists of variable sized rock that offer little to no access to depths where temperatures are above freezing. The remaining 11 mines consisted of 7 vertical shafts, 1 adit and 3 mines for which there was no feature data available. These 11 sites were further investigated to assess their suitability as potential bat hibernacula. Shafts and adits have the potential to provide suitable hibernation conditions and comprise the bulk of all known mines used by bats. There was also insufficient information to excuse mines with no data from additional investigation.

From August 29 – September 1, 2013, efforts were made to locate the 11 mines described above. Three of these could not be surveyed because two were on private property (AMIS 00093 and AMIS 00062) and one (AMIS 00283) could not be located despite an intensive search (Table 3-8). Once biologists entered the vicinity of each mine, approximately 30 minutes were devoted to locating the mines. Due to the risk of coming into contact with a bat hibernaculum, measures were taken to prevent the potential spread of White-Nose Syndrome (WNS) following the *National White-Nose Syndrome Decontamination Protocol* (USFWS 2012). Once biologists arrived within 20 m of a mine site, they did not progress without wearing vinyl gloves, rubber boots and disposable Tyvek coveralls. Upon leaving the 20 m buffer, equipment that entered the buffer zone was disinfected with a 10% solution of Clorox bleach. Used hazmat suits and gloves were sealed in a clean plastic bag and later discarded. Once a mine was located, it was externally assessed for its potential to serve as a hibernaculum for bats. No protocol exists in Ontario for conducting a preliminary examination of abandoned mines to assess probable suitability for bats. Therefore, criteria used to identify suitable hibernacula were those used in the USFWS (2013) document *Bat Survey Protocol for Assessing Use of Potential Hibernacula*. A mine was dismissed from further surveys if:

- there was only one horizontal opening less than 6 inches in diameter and no or very little airflow is detectable;
- it was a vertical shaft <1 foot in diameter;
- a horizontal passage continued for <50 feet and terminates with no fissures that bats can access;
- the opening / passage showed evidence of frequent and / or complete flooding, had collapsed completely shut, or was otherwise inaccessible to bats; and
- it was a “new” opening, which had occurred recently (less than 1 year old) due to subsidence.

If any candidate bat hibernacula was identified during the above investigations, surveys to evaluate the use of those mines by bats would have followed the document *Bats and Bat Habitats: Guidelines for Wind Power Projects* (MNR 2011c). However, no candidate hibernacula were found (see results section below).

2.4.2.4 Bat Acoustic Activity Surveys

Nocturnal bat activity was documented from sunset to sunrise for seven nights from May 29 to June 5, 2013 with six Songmeter SM2Bat+ (Wildlife Acoustics Inc.) ultrasonic recording devices deployed throughout the local study area. Prior to deployment, an ultrasonic calibrator (Wildlife Acoustics Inc.) that emitted a 40 kHz pure tone was used to verify the sensitivity and proper functioning of the bat detector microphones. Detectors were positioned 3 - 4 m above ground at locations where higher levels of bat activity were likely to occur, such as woodland and/or wetland edges (Appendix II). Bat detectors were configured to begin recording when ultrasonic signals greater than 18 dB above the noise floor rolling average were detected. Upon trigger, a 2 - 5 second recording was saved. A signal process then filtered recorded signals and retained those resembling bat echolocation. All recordings were made in .wav format with a 384 kHz sampling frequency and 16-bit resolution, resulting in real-time, full spectrum data that affords greater accuracy and confidence when identifying recordings of bat calls to species.

Bat detectors were deployed in areas that targeted the two bat SAR species, Little Brown Myotis and Northern Myotis. The Little Brown Myotis is a habitat generalist preferring to forage over open bodies of water, at the margins of waterbodies and forests, in clearings and along open forest roads (Jung *et al.*, 1999). The Northern Myotis is specialized for feeding in more cluttered environments such as the interior of forests (Jung *et al.*, 1999; Patriquin and Barclay, 2003). Therefore, three detectors were deployed at the edges of wetlands/forest and three were deployed within forests.

Recordings were identified to species using Sonobat 2.97 (Sonobat™) software. Qualitative and quantitative parameters were used to compare recorded calls of unknown species to those obtained from a library of recorded calls for which species were known. Parameters used for species identification included the frequency of maximum energy, minimum frequency, maximum frequency, call duration, slope of the call and other more qualitative parameters such as the time-frequency shape of the call, the position of the knee, presence of inflections and terminal curvatures (Appendix III). Less importance was placed on frequency with maximum energy and maximum frequency as these parameters were heavily influenced by the sensitivity of the recording equipment and maximum frequency which is highly susceptible to atmospheric attenuation. Calls that could not be classified to a single species were placed in a group named after the two or more species that were most likely to have produced the call.

During the acoustic bat surveys conducted from May 29 to June 5, 2013, an unusually high level of bat activity was recorded at bat detector site D1 (see results). This detector was deployed at the edge of a linear wetland. Four hypotheses were posited to explain this activity: 1) the detector is near a hibernaculum; 2) the detector is near significant maternity roosting habitat; 3) the detector is near a favourable foraging site; and 4) bats commute / migrate along the linear wetland. To test these hypotheses, additional surveys were conducted in proximity to site D1 between August 30 and September 9, 2013. To address hypotheses 1 and 2, a ground survey covering an approximate 100 m diameter from site D1 was conducted to identify any features in

the vicinity of D1 such as potential hibernacula or roost trees that would explain the elevated bat activity. This survey revealed an area with flowing water below the ground and large boulders partly submerged in the ground. The openings between the boulders and tree roots might have been large and deep enough to serve as hibernacula. A tape measure was used to measure and identify holes deep enough (>1 m) to qualify as candidate hibernacula. One hole extended 1.5 m on a 45 degree angle and all others extended no further than 0.6 m. All observed openings were approximately 10 - 20 cm in diameter. Although no obvious candidate hibernaculum was identified, a bat detector was deployed at this site to monitor acoustic bat activity between August 30 and September 9, 2013 (for ten consecutive nights). Two other bat detectors were also deployed, one at the original D1 location and one 100 m downstream of D1 along the linear wetland. A comparison of bat activity among these three sites would assist in addressing hypotheses 1, 3 and 4.

2.4.2.5 Incidental Observations

Incidental mammal observations made while conducting other targeted surveys (e.g., bird surveys, vegetation and wetland surveys, amphibian surveys) were also recorded. Mammal species were detected by visual observation, tracks, scat, dens, nests, gnaw marks or vocalizations.

2.4.3 Reptiles and Basking Turtles

Reptile surveys were conducted while conducting other targeted surveys (e.g., bird surveys, vegetation and wetland surveys, bat habitat surveys, amphibian surveys). Reptiles are particularly difficult to document and are mainly identified by searching for evidence of activity in suitable habitats or through incidental observation. As such, surveys consisted of searching for:

- evidence of potential nesting sites for turtles;
- evidence of potential overwintering habitats for turtles;
- potential turtle basking sites in suitable marsh wetlands; and
- evidence of potential snake hibernacula sites.

Targeted surveys for basking turtles were also conducted at two marshes that were considered to be suitable habitat for turtles (e.g., shallow water rich in nutrients, organic soil and dense vegetation) on June 19 and 20, 2013 (see Figure 2-5). These basking turtle surveys were only conducted during suitable weather conditions (sunny, low wind, no rain) and survey stations were at least 250 m apart. Binoculars were used to scan shorelines and potential basking sites at each station. Basking turtle surveys were also conducted opportunistically throughout the local study area during all other plant and wildlife surveys.

2.4.4 Amphibians

Amphibians were surveyed opportunistically during crepuscular bird surveys (see Figure 2-3) and during other plant and wildlife surveys. Calling frogs were recorded in the evening during

crepuscular bird surveys and opportunistically during breeding bird, marsh bird and vegetation inventories. Visual searches for frogs, salamanders and snakes were conducted during breeding bird, marsh bird and vegetation surveys by means of flipping over logs in suitable habitat and searching any available vernal pools, stream banks, or lakeshores for adults, egg masses, or larvae.

2.4.5 Species at Risk and Provincially Rare Species

A preliminary review of potential SAR present in the regional study area were identified through consultation with the MNR, a review of the MNR's NHIC and a review of bird, herptile, mammal, butterfly and dragonfly/damselfly atlases for Ontario. The presence of these species protected under federal and provincial legislation was surveyed concurrently with survey methods presented in previous sections.

3.0 RESULTS

3.1 General Site Description

The regional study area is located on the Canadian Shield within the southern portion of the Northern Clay Forest Section, close to the transition between the Northern Clay and the Missinaibi-Cabonga Forest Sections of the Boreal Forest Region (Rowe, 1972). The region is characterized by flat clay plains, interspersed with rock knobs and ridges, ancient raised beaches, eskers and other outwash deposits. The terrestrial environment is largely composed of upland communities comprised of Trembling Aspen, White Birch, Balsam Fir, Black Spruce and White Spruce. Parts of the area are dominated by glaciolacustrine plains composed mainly of clay and silt, with an overlying peaty, organic terrain. These plains have low local relief and are generally wet, with poor drainage. As such, extensive areas of Black Spruce and Eastern White Cedar (*Thuja occidentalis*) communities occur on these poorly drained areas. Tamarack is present largely in fen areas and wet habitats with flowing surface water.

There is a history of forestry and fire in the regional study area and is reflected in the vegetation structure. Vegetation communities include young and mature stands of Trembling Aspen, Balsam Poplar and to a lesser extent White Birch, Balsam Fir and White Spruce, all of which are considered pioneer species, colonizing recently disturbed areas. Logging has taken place in several areas within the regional study area, as well as in the surrounding landscape.

3.2 Vegetation Community and Ecosite Classification

The regional study area is comprised of 33 distinct plant communities (upland and wetland) as summarized in Table 3-1 and illustrated on Figure 3-1. Upland deciduous / mixedwood forest, upland coniferous forest and wetland coniferous swamp communities co-dominate the regional study area. Photographic records of the ecosites / vegetation communities are provided in Appendix IV. The compiled plant species list and associated ranks and protective status are presented in Table 3-2. A total of 152 plant species were identified during field surveys. Of these, 97% are native to Ontario and none are listed provincially or federally as SAR.

Table 3-1: Vegetation Communities Occurring within the Regional Study Area

Vegetation Community[1]	Area (ha)	Percent Cover
Upland Communities		
Upland Deciduous/Mixedwood Forest		
B055/ES3 (Dry to Fresh, Coarse: Aspen - Birch Hardwood / White Birch – Trembling Aspen – Black Spruce – Coarse Soil)	11,885	16.1
B104/ES7m (Fresh, Silty to Fine Loamy: Aspen - Birch Hardwood / Trembling Aspen – White Birch – Medium Soil)	6,284	8.5
B104/ES6m (Fresh, Silty to Fine Loamy: Aspen - Birch Hardwood / Trembling Aspen – Black Spruce – Balsam Fir – Medium Soil)	2,666	3.6
B055/ES7c (Dry to Fresh, Coarse: Aspen - Birch Hardwood / Trembling Aspen – White Birch – Coarse Soil)	2,366	3.2

Vegetation Community[1]	Area (ha)	Percent Cover
B040/ES6c (Dry, Sandy: Aspen – Birch Hardwood / Trembling Aspen – Black Spruce – Jack Pine – Coarse Soil)	892	1.2
B104/ES16 (Fresh, Silty to Fine Loamy: Aspen - Birch Hardwood / Yellow Birch)	523	0.7
B058/ES15 (Dry to Fresh, Coarse: Maple Hardwood / Red Maple)	190	0.3
B088/ES7f (Fresh, Clayey: Aspen - Birch Hardwood / Trembling Aspen – White Spruce – White Birch – Fine Soil)	103	0.1
B039/ES19 (Dry, Sandy: Red Pine – White Pine Mixedwood / White Pine – Red Pine – Mixedwood)	24	0.03
Total Upland Deciduous/Mixedwood Forest	**24,935**	**33.8**
Upland Coniferous Forest		
B083/ES6f (Fresh, Clayey: Black Spruce - Pine Conifer / Black Spruce – Trembling Aspen – Fine Soil)	7,022	9.5
B034/ES2 (Dry, Sandy: Jack Pine – Black Spruce Dominated / Jack Pine – Coarse Soil)	6,355	8.6
B049/ES4 (Dry to Fresh, Coarse: Jack Pine - Black Spruce Dominated / Black Spruce – Jack Pine – Coarse Soil)	3,147	4.3
B082/ES5f (Fresh, Clayey: Black Spruce - Jack Pine Dominated / Black Spruce – Fine Soil)	1,632	2.2
B114/ES5m (Moist, Fine: Black Spruce - Pine Conifer / Black Spruce – Medium Soil)	488	0.7
B050/ES3 (Dry to Fresh, Coarse: Pine - Black Spruce Conifer / White Birch – Trembling Aspen – Black Spruce – Coarse Soil)	446	0.6
B014/ES1r (Very Shallow, Dry to Fresh: Conifer / White Spruce – White Birch – Very Shallow Soil – Species Rich)	99	0.1
Total Upland Coniferous Forest	**19,187**	**26.0**
Anthropologically-Disturbed Upland Communities		
B044 (Dry to Fresh, Coarse: Field)	20	0.03
B045 (Dry to Fresh, Coarse: Meadow)	28	0.04
Anthropogenic Ecosite	1,361	1.8
Total of all Upland Communities	**42,124**	**57.4**
Wetland Communities		
Wetland Deciduous Swamp		
B130/ES10/dS (Intolerant Hardwood Swamp / Trembling Aspen – Black Spruce – Balsam Poplar – Moist Soil / deciduous Swamp)	156	0.2
Wetland Coniferous Swamp		
B127/ES11/cS (Organic Poor Conifer Swamp / Black Spruce – Labrador-tea – Organic Soil / coniferous Swamp)	3,776	5.1
B224/ES9r/cS (Mineral Rich Conifer Swamp / White Spruce – Balsam Fir – White Cedar – Moist Soil – Species Rich / coniferous Swamp)	3,078	4.2
B222/ES8/cS (Black Spruce – Feathermoss – Sphagnum – Moist Soil / Mineral Poor Conifer Swamp / coniferous Swamp)	2,822	3.8
B223/ES9p/cS (Mineral Intermediate Conifer Swamp / Black Spruce – Larch – Moist Soil – Species Poor / coniferous Swamp)	1,447	2.0
B129/ES13p/cS (Organic Rich Conifer Swamp / Black Spruce – Larch – Speckled Alder – Organic Soil – Species Poor / coniferous Swamp)	2,193	3.0
B129/ES13r/cS (Organic Rich Conifer Swamp / White Cedar – Black Spruce – Organic Soil – Species Rich / coniferous Swamp)	1,290	1.7

Vegetation Community[1]	Area (ha)	Percent Cover
B128/ES12/cS (Organic Intermediate Conifer Swamp / Black Spruce – Larch – Labrador-tea – Organic Soil / coniferous Swamp)	797	1.1
B137/ES14/cS (Black Spruce – Leatherleaf – Organic Soil / Sparse Treed Bog / coniferous Swamp)	403	0.5
Total Wetland Coniferous Swamp	**15,807**	**21.4**
Non-forested Wetland Communities		
B136/lsF (Sparse Treed Fen / low shrub-dominated Fen)	956	1.3
B139/B140/lsF (Poor Fen / Open Moderately Rich Fen / low shrub-dominated Fen)	403	0.5
B142/B144/neM (Mineral Meadow Marsh / Organic Meadow Marsh / narrow-leaved emergent vegetation-dominated Marsh)	1,080	1.5
B148/B149/reM (Mineral Shallow Marsh / Organic Shallow Marsh / robust-leaved emergent vegetation-dominated Marsh)	31	0.04
B134/B135/tsS (Mineral Thicket Swamp / Organic Thicket Swamp / tall shrub-dominated Swamp)	2,731	3.7
Total Non-forested Wetland Communities	**5,206**	**7.1**
Total of all Wetland Communities	**21,167**	**28.7**
Water	**6,972**	**9.5**
Total Regional Study Area		**100**

Note:
[1] Multiple classifications systems possible. Primarily based on community characteristics as described in the Ecosites of Ontario (ELCWG, 2009) and secondarily based on characteristics as described in the Field Guide to Forest Ecosystems of Northeastern Ontario (Taylor *et al.*, 2000).

Upland forested and non-forested communities comprise 61.8% of the regional study area (42,117 ha). According to the FRI and LIO, wetlands cover 28.7% (21,167 ha) of the regional study area and include fen, shallow marsh, meadow marsh, swamp thickets and treed deciduous and coniferous swamp. A fen is a wetland where the water source is minerotrophic, meaning its non-direct water supply comes from streams or springs with dissolved minerals such as calcium and magnesium as well as carbonates. As a result, fens can be alkaline to mildly acidic. While fens may be treed or treeless, tree cover cannot exceed 25%. A marsh is a wetland where tree and shrub cover are less than 25% and vegetation is dominated by emergent herbaceous species. Open water may or may not be present but water remains within the rooting zone of plants during at least part of the growing season. Waters are usually circumneutral to slightly alkaline and there is relatively high oxygen saturation. Swamp wetlands are wooded wetlands with greater than 25% cover of trees or shrubs. Treed swamps have greater than 25% tree cover and shrub swamps have greater than 25% shrub cover, but less than 25% tree cover. In swamps, standing to gently flowing waters occur seasonally or persist for long periods on the surface. Frequently there is an abundance of pools and channels indicating subsurface water flow. The substrate is usually continuously waterlogged. Waters are circumneutral to moderately acid in reaction and show little deficiency in oxygen or in mineral nutrients (MNR, 2013b). Water bodies cover 9.5% of the regional study area (6,972 ha).

Table 3-2: Compiled Plant Species List

Common Name	Latin Name	Coefficient of Conservatism[1]	Wetness Index[2]	Provincial SRank[3]	COSEWIC Status	MNR Status	Global GRank[4]	Ontario General Status	Canada General Status
Flowering Herbaceous									
Baneberry sp.	*Actaea sp.*	—	—	—	—	—	—	—	—
Wood Anemone	*Anemone quinquefolia*	7	0	S5	—	—	G5	SECURE	SECURE
Wild Sarsaparilla	*Aralia nudicaulis*	4	3	S5	—	—	G5	SECURE	SECURE
False Nettle	*Boehmeria cylindrica*	4	-5	S5	—	—	G5	SECURE	SECURE
Marsh Marigold	*Caltha palustris*	5	-5	S5	—	—	G5	SECURE	SECURE
Common Mouse-ear Chickweed	*Cerastium fontanum*	—	3	SNA	—	—	GNR	EXOTIC	EXOTIC
Enchanter's Nightshade	*Circaea quadrisulcata*	—	—	—	—	—	—	—	—
Carolina Spring-beauty	*Claytonia caroliniana*	7	3	S5	—	—	G5	SECURE	SECURE
Clintonia	*Clintonia borealis*	7	-1	S5	—	—	G5	SECURE	SECURE
Marsh Cinquefoil	*Comarum palustre*	7	-5	S5	—	—	G5	SECURE	SECURE
Goldthread	*Coptos trifolia* ssp. *Groenlandica*	7	-3	S5	—	—	G5	SECURE	SECURE
Pale Corydalis	*Corydalis flavula*	7	5	S5	—	—	G4G5	SECURE	SECURE
Pink Lady's-slipper	*Cypripedium acaule*	7	-3	S5	—	—	G5	SECURE	SECURE
Round-leaved Sundew	*Drosera rotundifolia*	7	-5	S5	—	—	G5	SECURE	SECURE
Fireweed	*Epilobium angustifolium*	3	0	S5	—	—	G5	SECURE	SECURE
Large-leaved Aster	*Eurybia macrophyllus*	5	5	S5	—	—	G5	SECURE	SECURE
Woodland Strawberry	*Fragaria vesca* ssp. *americana*	4	4	S5	—	—	G5	SECURE	SECURE
Wild Strawberry	*Fragaria virginiana*	2	1	S5	—	—	G5	SECURE	SECURE
Rough Bedstraw	*Galium asprellum*	6	-5	S5	—	—	G5	SECURE	SECURE
Fragrant Bedstraw	*Galium trifidum*	4	2	S5	—	—	G5	SECURE	SECURE
Large-leaved Avens	*Geum macrophyllum*	9	-4	S5	—	—	G5	SECURE	SECURE
Spotted Jewel-weed	*Impatienscapensis*	4	-3	S5	—	—	G5	SECURE	SECURE
Blueflag	*Iris versicolor*	5	-5	S5	—	—	G5	SECURE	SECURE
Wild-lily-of-the-valley	*Maianthemum canadense*	5	0	S5	—	—	G5	SECURE	SECURE
False Solomon's Seal	*Maianthemum racemosum*	4	3	S5	—	—	G5	SECURE	SECURE
Three-leaf Solomon's Seal	*Maianthemum trifolium*	10	-5	S5	—	—	G5	SECURE	SECURE
Bog Buckbean	*Menyanthes trifoliata*	9	-5	S5	—	—	G5	SECURE	SECURE
Northern Bluebells	*Mertensia paniculata*	—	—	S5	—	—	G5	SECURE	SECURE
Naked Mitrewort	*Mitella nuda*	6	-3	S5	—	—	G5	SECURE	SECURE
Dillen's Woodsorrel	*Oxalis dillenii*	0	3	S5?	—	—	G5	SECURE	SECURE
Sweet Coltsfoot	*Petasites frigidus*	8	-3	S5	—	—	G5	SECURE	SECURE
Gay-wing Milkwort	*Polygala paucifolia*	6	3	S5	—	—	G5	SECURE	SECURE
Pyrola sp.	*Pyrola sp.*	—	—	—	—	—	—	—	—
Kidney-leaf Buttercup	*Ranunculus abortivus*	2	-2	S5	—	—	G5	SECURE	SECURE
Tall Buttercup	*Ranunculus acris*	—	-2	SNA	—	—	G5	EXOTIC	EXOTIC
Sheep Sorrel	*Rumex acetosella* spp. *Acetosella*	—	—	SE	—	—	—	EXOTIC	EXOTIC
Rough-leaf Goldenrod	*Soildago rugosa*	4	-1	S5	—	—	G5	SECURE	SECURE
Rose Twisted-stalk	*Streptopus lanceolatus*	7	0	S5	—	—	G5	SECURE	SECURE

Common Name	Latin Name	Coefficient of Conservatism[1]	Wetness Index[2]	Provincial SRank[3]	COSEWIC Status	MNR Status	Global GRank[4]	Ontario General Status	Canada General Status
Lindley's Aster	*Symphyotrichum ciliolatum*	6	4	S5	—	—	G5	SECURE	SECURE
Tall Meadow-rue	*Thalictrum pubescens*	5	-2	S5	—	—	G5	SECURE	SECURE
Star-flower	*Trientalis borealis* ssp. *borealis*	6	-1	S5	—	—	G5	SECURE	SECURE
Red Clover	*Trifolium pratense*	—	2	SNA	—	—	GNR	EXOTIC	EXOTIC
Nodding Trillium	*Trillium cemuum*	8	0	S5	—	—	G5	SECURE	SECURE
White Trillium	*Trillium grandiflorum*	5	5	S5	—	—	G5	SECURE	SECURE
Sand Violet	*Viola adunca*	8	1	S5	—	—	G5	SECURE	SECURE
Smooth White Violet	*Viola macloskeyi*	6	-5	S5	—	—	G5	SECURE	SECURE
Kidney-leaf Violet	*Viola renifolia*	7	-3	S5	—	—	G5	SECURE	SECURE
Grasses/Sedges/Rushes									
Canada Blue-joint	*Calamagrostis canadensis*	4	-5	S5	—	—	G5	SECURE	SECURE
Water Sedge	*Carex aquatilis*	7	-5	S5	—	—	G5	SECURE	SECURE
Brownish Sedge	*Carex brunnecens*	7	-3	S5	—	—	G5	SECURE	SECURE
Chestnut-colored Sedge	*Carex castanea*	7	-4	S5	—	—	G5	SECURE	SECURE
Two-fruited Sedge	*Carex disperma*	8	-5	S5	—	—	G5	SECURE	SECURE
Graceful Sedge	*Carex gracillima*	4	3	S5	—	—	G5	SECURE	SECURE
Bladder Sedge	*Carex intumescens*	6	-4	S5	—	—	G5	SECURE	SECURE
Lake-bank Sedge	*Carex lacustris*	5	-5	S5	—	—	G5	SECURE	SECURE
Slender Sedge	*Carex lasiocarpa*	8	-5	S5	—	—	G5	SECURE	SECURE
Bristle-stalk Sedge	*Carex leptalea*	8	-5	S5	—	—	G5	SECURE	SECURE
Mud Sedge	*Carex limosa*	10	-5	S5	—	—	G5	SECURE	SECURE
Boreal Bog Sedge	*Carex magellanica*	—	—	S5	—	—	G5	SECURE	SECURE
Few-Flowered Sedge	*Carex pauciflora*	10	-5	S5	—	—	G5	SECURE	SECURE
Longstalk Sedge	*Carex pedunculata*	5	5	S5	—	—	G5	SECURE	SECURE
Stalk-grain Sedge	*Carex stipata*	3	-5	S5	—	—	G5	SECURE	SECURE
Tussock Sedge	*Carex stricta*	4	-5	S5	—	—	G5	SECURE	SECURE
Slender Sedge	*Carex tenera*	4	-1	S4S5	—	—	G5	SECURE	SECURE
Three-fruited Sedge	*Carex trisperma*	—	—	S5	—	—	G5T5	SECURE	SECURE
Sheathed Sedge	*Carex vaginata*	10	-5	S5	—	—	G5	SECURE	SECURE
Three-way Sedge	*Dulichium arundinaceum*	7	-5	S5	—	—	G5	SECURE	SECURE
Poverty Oat Grass	*Danthonia spicata*	5	5	S5	—	—	G5	SECURE	SECURE
Spike-rush sp.	*Eleocharis sp.*	—	—	—	—	—	—	—	—
Quack Grass	*Elymus repens*	—	3	SNA	—	—	GNR	EXOTIC	EXOTIC
Tussock Cotton-grass	*Eriophorum vaginatum*	10	-5	S5	—	—	G5	SECURE	SECURE
Hairy Woodrush	*Luzula acuminata*	6	1	S5	—	—	G5	SECURE	SECURE
White-grained Mountain-ricegrass	*Oryzopsis asperifolia*	6	5	S5	—	—	G5	SECURE	SECURE
White Beakrush	*Rhynchospora alba*	10	-5	S5	—	—	G5	SECURE	SECURE
Purple Oat	*Schizachne purpurances*	6	2	S5	—	—	G5	SECURE	SECURE
Wool-grass	*Scirpus cyperinus*	4	-5	S5	—	—	G5	SECURE	SECURE
Aquatic Plants									
Pennsylvania Bitter-cress	*Cardamine pensylvanica*	6	-4	S5	—	—	G5	SECURE	SECURE
Lesser duckweed	*Lemna minor*	2	-5	S5	—	—	G5	SECURE	SECURE
Yellow Cowlily	*Nuphar lutea ssp. variegata*	—	—	S5	—	—	G5T5	SECURE	SECURE

Common Name	Latin Name	Coefficient of Conservatism[1]	Wetness Index[2]	Provincial SRank[3]	COSEWIC Status	MNR Status	Global GRank[4]	Ontario General Status	Canada General Status
Cattail	*Typha latifolia*	3	-5	S5	—	—	G5	SECURE	SECURE
Greater Bladderowrt	*Utricularia vulgaris*	4	-5	S5	—	—	G5	SECURE	SECURE
Ferns and Allies									
Lady Fern	*Athyrium filix-femina ssp. Angustum*	—	—	S5	—	—	G5T5	SECURE	SECURE
Rattlesnake Fern	*Botrychium virginianum*	5	3	S5	—	—	G5	SECURE	SECURE
Spinulose Wood Fern	*Dryopteris carthusiana*	5	-2	S5	—	—	G5	SECURE	SECURE
Water Horsetail	*Equisetum fluviatile*	7	-5	S5	—	—	G5	SECURE	SECURE
Meadow Horsetail	*Equisetum pratense*	8	-3	S5	—	—	G5	SECURE	SECURE
Woodland Horsetail	*Equisetum sylvaticum*	7	-3	S5	—	—	G5	SECURE	SECURE
Oak Fern	*Gymnocarpium dryopteris*	7	0	S5	—	—	G5	SECURE	SECURE
Stiff Clubmoss	*Lycopodium annotinum*	7	0	S5	—	—	G5	SECURE	SECURE
Running Pine	*Lycopodium clavatum*	6	0	S5	—	—	G5	SECURE	SECURE
Treelike Clubmoss	*Lycopodium dendroideum*	7	0	S5	—	—	G5	SECURE	SECURE
Ostrich Fern	*Matteuccia struthiopteris* var. *pensylvanica*	5	-3	S5	—	—	G5	SECURE	SECURE
Sensitive Fern	*Onoclea sensibilis*	4	-3	S5	—	—	G5	SECURE	SECURE
Interrupted Fern	*Osmunda claytoniana*	7	-1	S5	—	—	G5	SECURE	SECURE
Northern Beech Fern	*Phegopteris connectilis*	8	5	S5	—	—	G5	SECURE	SECURE
Bracken Fern	*Pteridium aquilinum*	2	3	S5	—	—	G5	SECURE	SECURE
Marsh Fern	*Thelypteris palustris*	5	-4	S5	—	—	G5	SECURE	SECURE
Vines									
Hairy Honeysuckle	*Lonicera hirsuta*	7	0	S5	—	—	G4G5	SECURE	SECURE
Fringed Black Bindweed	*Polygonum cilinode*	2	5	S5	—	—	G5	SECURE	SECURE
Coniferous Trees and Shrubs									
Balsam Fir	*Abies balsamea*	5	-3	S5	—	—	G5	SECURE	SECURE
Tamarack	*Larix laricina*	7	-3	S5	—	—	G5	SECURE	SECURE
White Spruce	*Picea glauca*	6	3	S5	—	—	G5	SECURE	SECURE
Black Spruce	*Picea mariana*	8	-3	S5	—	—	G5	SECURE	SECURE
Jack Pine	*Pinus banksiana*	9	3	S5	—	—	G5	SECURE	SECURE
Eastern White Pine	*Pinus strobus*	4	3	S5	—	—	G5	SECURE	SECURE
Canadian Yew	*Taxus canadensis*	7	3	S4	—	—	G5	SECURE	SECURE
Eastern White Cedar	*Thuja occidentalis*	4	-3	S5	—	—	G5	SECURE	SECURE
Deciduous Shrubs									
Maple Mountain	*Acer spicatum*	6	3	S5	—	—	G5	SECURE	SECURE
Speckled Alder	*Alnus incana ssp. rugosa*	6	-5	S5	—	—	G5	SECURE	SECURE
Serviceberry sp.	*Amelanchier sp.*	—	—	—	—	—	—	—	—
Bog Rosemary	*Andromeda polifolia var. glaucophylla*	—	—	S5	—	—	G5T5	—	—
Dwarf Birch	*Betula pumila*	9	-5	S5	—	—	G5	SECURE	SECURE
Leatherleaf	*Chamaedaphne calyculata*	9	-5	S5	—	—	G5	SECURE	SECURE
Sweet Fern	*Comptonia peregrina*	7	5	S5	—	—	G5	SECURE	SECURE
Alternative-leaved Dogwood	*Cornus alterniflolia*	6	5	S5	—	—	G5	SECURE	SECURE

Common Name	Latin Name	Coefficient of Conservatism[1]	Wetness Index[2]	Provincial SRank[3]	COSEWIC Status	MNR Status	Global GRank[4]	Ontario General Status	Canada General Status
Bunchberry	*Cornus canadensis*	7	0	S5	—	—	G5	SECURE	SECURE
Red-osier Dogwood	*Cornus sericea*	5	-4	S5	—	—	G5	SECURE	SECURE
Beaked Hazel	*Corylus cornuta*	5	5	S5	—	—	G5	SECURE	SECURE
Northern Bush-honeysuckle	*Diervilla lonicera*	5	5	S5	—	—	G5	SECURE	SECURE
Trailing Arbutus	*Epigaea repens*	9	5	S5	—	—	G5	SECURE	SECURE
Creeping Snowberry	*Gaultheria hispidula*	8	-3	S5	—	—	G5	SECURE	SECURE
Teaberry	*Gaultheria procumbens*	6	3	S5	—	—	G5	SECURE	SECURE
Sheep-laurel	*Kalmia angustifolia*	9	0	S5	—	—	G5	SECURE	SECURE
Pale Laurel	*Kalmia polifolia*	10	-5	S5	—	—	G5	SECURE	SECURE
Common Labrador Tea	*Ledum groenlandicum*	9	-5	S5	—	—	G5	SECURE	SECURE
Twinflower	*Linnaea borealis*	7	0	S5	—	—	G5	SECURE	SECURE
Fly Honeysuckle	*Lonicera canadensis*	6	3	S5	—	—	G5	SECURE	SECURE
Mountain Fly-honeysuckle	*Lonicera villosa*	10	-3	S5	—	—	G5	SECURE	SECURE
Sweet Gale	*Myrica gale*	6	-5	S5	—	—	G5	SECURE	SECURE
Choke Cherry	*Prunus virginiana ssp. Virginiana*	2	1	S5	—	—	G5	SECURE	SECURE
Alder-leaved Buckthorn	*Rhamnus alnifolia*	7	-5	S5	—	—	G5	SECURE	SECURE
Skunk Currant	*Ribes glandulosum*	6	-3	S5	—	—	G5	SECURE	SECURE
Bristly Black Currant	*Ribes lacustre*	7	-3	S5	—	—	G5	SECURE	SECURE
Swamp Red Currant	*Ribes triste*	6	-5	S5	—	—	G5	SECURE	SECURE
Prickly Rose	*Rosa acicularis*	7	3	S5	—	—	G5	SECURE	SECURE
Wild Red Raspberry	*Rubus idaeus*	—	—	S5	—	—	G5T5	SECURE	SECURE
Dwarf Raspberry (Catherinettes Berry)	*Rubus pubescens*	4	-4	S5	—	—	G5	SECURE	SECURE
Willow sp.	*Salix sp.*	—	—	—	—	—	—	—	—
Bog Willow	*Salix pedicellaris*	9	-5	S5	—	—	G5	SECURE	SECURE
Red-berried Elderberry	*Sambucus racemosa*	5	2	S5	—	—	G5	SECURE	SECURE
Northern Mountain-ash	*Sorbus decora*	8	3	S5	—	—	G4G5	SECURE	SECURE
Meadow-sweet Narrow-leaved	*Spiraea alba*	3	-4	S5	—	—	G5	SECURE	SECURE
Late Low-bush Blueberry	*Vaccinium angustifolium*	6	3	S5	—	—	G5	SECURE	SECURE
Velvetleaf Blueberry	*Vaccinium myrtilloides*	7	-2	S5	—	—	G5	SECURE	SECURE
Cranberry Small	*Vaccinium oxyoccos*	10	-5	S5	—	—	G5	SECURE	SECURE
Deciduous Trees									
Red Maple	*Acer rubrum*	4	0	S5	—	—	G5	SECURE	SECURE
Yellow Birch	*Betula alleghaniensis*	6	0	S5	—	—	G5	SECURE	SECURE
White Birch	*Betula papyrifera*	2	2	S5	—	—	G5	SECURE	SECURE
Black Ash	*Fraxinus nigra*	7	-4	S5	—	—	G5	SECURE	SECURE
Balsam Poplar	*Populus balsamea*	4	-3	S5	—	—	G5	SECURE	SECURE
Trembling Aspen	*Populus tremuloides*	2	0	S5	—	—	G5	SECURE	SECURE

Notes:
Total: 152, **Native:** 147 (97%), **Exotic**: 5 (3%)

[1] **Coefficient of Conservatism**: Values for range from 0 for extremely weedy species, to 10 for those species which exhibit a marked fidelity to specialized habitats. Plants found in a wide variety of plant communities, including disturbed sites, are ranked 0 to 3. Taxa that typically are associated with a specific plant community, but tolerate moderate disturbance, are assigned ranks of 4 to 6. Rankings of 7 to 8 apply to those taxa associated with a plant community in an advanced successional stage that has undergone minor disturbance. Those plants with high degrees of fidelity to a narrow range of synecological parameters are assigned a value of 9 to 10.

[2] **Wetness Index**: The "+" sign denotes that the species generally has a greater estimated probability of occurring in uplands. The "-" sign denotes that the species generally has a lesser estimated probability of occurring in wetlands. A value of -5 is assigned to obligate wetland species and a value of 5 to obligate upland species.

[3] **NHIC Provincial SRANK**

S1	Critically Imperiled
S2	Imperiled
S3	Vulnerable
S4	Apparently Secure
S5	Secure
S?	Not Ranked Yet: if follow a rank, Rank Uncertain
SNR	Unranked
SNA	Not Applicable
GNA	Not Applicable

[4] **Global GRANK**

G1	Extremely rare
G2	Very rare
G3	Rare to Uncommon
G4	Common
G5	Very common
T#	Rank applies to a subspecies or variety (# corresponds to GRANK)
G?	Unranked or tentatively assigned rank (if placed after a ranking)
GNR	Unranked

Source: MNR (2013c).

The Significant Wildlife Habitat Criteria Schedules for Ecoregion 3E (MNR, 2012a) list those vegetation communities with Eastern White Pine, Red Maple (*Acer rubrum*) and Yellow Birch (*Betula alleghaniensis*) as candidate rare vegetation communities. While some of those B-codes corresponding to these candidate rare vegetation communities are present within the regional study area (B039 for Eastern White Pine; B058 for Red Maple; and, B040, B055, B088 and B104 for Yellow Birch), these stands do not have a greater than 10% absolute cover or greater than 35% relative cover of the target tree species and, as such, cannot be confirmed as Significant Wildlife Habitat.

Some of the vegetation community polygons visited during field surveys had recently been harvested or were undergoing different stages of post-harvest regeneration. Some of these polygons had been identified during the spring aerial survey (see Figure 2-2); however, as it was not possible to visit every vegetation polygon in the regional study area, changes to community codes were not made as they would have been done so inconsistently. As such, a small proportion of vegetation community polygons may in fact be harvested or undergoing post-harvest regeneration.

3.2.1 Upland Deciduous/Mixedwood Forest

Nine upland deciduous/mixedwood forest types are found within the regional study area (33.8% cover; 24,935 ha). Deciduous forests are those dominated by deciduous tree cover, but may contain coniferous trees.

The B055/ES3 (Dry to Fresh, Coarse: Aspen - Birch Hardwood / White Birch – Trembling Aspen – Black Spruce – Coarse Soil) community is dominated by White Birch and Trembling Aspen but is often mixed with Black Spruce, Balsam Fir, White Spruce and Jack Pine. The understory is shrub-rich and includes shrubs of those species present in the canopy as well as Bunchberry (*Cornus canadensis*), Bush Honeysuckle (*Diervilla lonicera*), blueberries (*Vaccinium spp.*), Beaked Hazel (*Corylus cornuta*) and Mountain Maple (*Acer spicatum*). Ground cover species include Large-leaved Aster (*Symphotrichum macrophyllus*), Blue Bead Lily (*Clintonia borealis*), Bracken Fern (*Pteridium aquilinum*), Goldthread (*Coptos trifolia* ssp. *groenlandica*), Starflower (*Trientalis borealis*) and Ground Pine (*Lycopodium obscurum*).

The B104/ES7m (Fresh, Silty to Fine Loamy: Aspen - Birch Hardwood / Trembling Aspen – White Birch – Medium Soil) community is dominated by Trembling Aspen and White Birch with Balsam Fir, White Spruce, Black Spruce, Jack Pine and Eastern White Cedar. The understory is shrub-rich and includes shrubs of those species present in the canopy as well as Dwarf Raspberry, Northern Mountain-ash, Mountain Maple, Bunchberry, Beaked Hazel and Twinflower. Ground cover species include Wild Sarsaparilla, Large-leaved Aster, violets, Rose Twisted-stalk, Goldthread, sedges, Spinulose Wood Fern (*Dryopteris carthusiana*) and Ground Pine.

The B104/ES6m (Fresh, Silty to Fine Loamy: Aspen - Birch Hardwood / Trembling Aspen – Black Spruce – Balsam Fir – Medium Soil) community is mainly comprised of Trembling Aspen and co-dominated by Black Spruce and White Birch. Other species associated with this forest type include Balsam Fir, Jack Pine, White Spruce and Balsam Poplar. The understory is shrub-rich and includes shrubs of those species present in the canopy as well as Speckled Alder (*Alnus incana ssp. rugosa*), Wild Red Raspberry (*Rubus idaeus*), Beaked Hazel, Bunchberry, Twinflower (*Linnaea borealis*) and Creeping Snowberry (*Gaultheria hispidula*). Ground cover species include Fragrant Bedstraw (*Galium trifidum*), Naked Mitrewort (*Mitella nuda*), Wild Sarsaparilla (*Aralia nudicaulis*), Wild Strawberry (*Fragaria virginiana*), Sweet Coltsfoot (*Petasites frigidus*), Rose Twisted-stalk (*Streptopus lanceolatus*), blueberries, Blue Bead Lily and sedges (*Carex spp.*).

The B055/ES7c (Dry to Fresh, Coarse: Aspen - Birch Hardwood / Trembling Aspen – White Birch – Coarse Soil) community is dominated by Trembling Aspen and White Birch with White Spruce, Balsam Fir, Eastern White Cedar and Black Spruce. The understory is shrub-rich and includes shrubs of those species present in the canopy as well as Bush Honeysuckle, Beaked Hazel, Mountain Maple, Dwarf Raspberry (*Rubus pubescens*), Northern Mountain-ash (*Sorbus decora*) and Twinflower. The diversity of herbaceous ground cover species may be low and includes Blue Bead Lily, Wild Sarsaparilla, Starflower, Rose Twisted-stalk, violets (*Viola spp.*) and Ground Pine.

The B040/ES6c (Dry, Sandy: Aspen – Birch Hardwood / Trembling Aspen – Black Spruce – Jack Pine – Coarse Soil) community is mainly comprised of Trembling Aspen and co-dominated by White Birch and Black Spruce. Other associates include Jack Pine, Balsam Fir and White Spruce. The understory is shrub-rich and includes shrubs of those species present in the canopy as well as Dwarf Raspberry, serviceberries (*Amelanchier spp.*), Bunchberry, Twinflower, Prickly Rose (*Rosa acicularis*), Beaked Hazel and Mountain Maple. Ground cover species include Wild Sarsaparilla, Blue Bead Lily, Wood Anemone (*Anemone quinquefolia*), Rose Twisted-stalk and Running Pine (*Lycopodium clavatum*).

The B104/ES16 (Fresh, Silty to Fine Loamy: Aspen - Birch Hardwood / Yellow Birch) community dominated by Trembling Aspen and White Birch with Yellow Birch, White Spruce, Balsam Fir, Red Maple and Eastern White Cedar. The understory is shrub-rich and includes shrubs of those species present in the canopy as well as Mountain Maple, Bush Honeysuckle, Canada Honeysuckle and Northern Mountain-ash. Ground cover species include Blue Bead Lily, Wild Sarsaparilla, Starflower, Ground Pine, violets, sedges and Large-leaved Aster.

The B058/ES15 (Dry to Fresh, Coarse: Maple Hardwood / Red Maple) community is dominated by Trembling Aspen and White Birch with Red Maple, Balsam Fir, White Spruce and Eastern White Cedar. The understory is shrub-rich and includes shrubs of those species present in the canopy as well as Mountain Maple, Beaked Hazel, blueberries, Bush Honeysuckle and

Twinflower. Ground cover species include Large-leaved Aster, Blue Bead Lily, Wild Sarsaparilla, Rose Twisted-stalk, violets, Ground Pine and Spinulose Wood Fern.

The B088/ES7f (Fresh, Clayey: Aspen - Birch Hardwood / Trembling Aspen – White Spruce – White Birch – Fine Soil) community is dominated by Trembling Aspen with White Spruce and White Birch. Other associates include Balsam Fir and Black Spruce. The understory is shrub-rich and includes shrubs of those species present in the canopy as well as Mountain Maple, Northern Mountain-ash, Beaked Hazel, Bristly Black Currant, Elderberry and Bush Honeysuckle. Ground cover species include Large-leaved Aster, Wild Sarsaparilla, Naked Mitrewort, Wood Anemone, Rose Twisted-stalk and Oak Fern.

The B039/ES19 (Dry, Sandy: Red Pine – White Pine Mixedwood / White Pine – Red Pine – Mixedwood) community is dominated by White Birch, Trembling Aspen and White Spruce with Eastern White Pine and commonly associated with Black Spruce, Balsam Fir, Jack Pine and Red Maple. The understory includes shrubs of those species present in the canopy as well as blueberries, Beaked Hazel, Bush Honeysuckle, Bunchberry, Twinflower, Mountain Maple, Canada Honeysuckle and serviceberries. The ground cover is species poor and includes Wild Sarsaparilla, Blue Bead Lily, Large-leaved Aster, Goldthread, Starflower and Bracken Fern.

3.2.2 Upland Coniferous Forest

Seven upland coniferous forest types are found within the regional study area (26.0% cover; 19,187 ha). Coniferous forests are those dominated by deciduous tree cover, but may contain coniferous trees.

The B083/ES6f (Fresh, Clayey: Black Spruce - Pine Conifer / Black Spruce – Trembling Aspen – Fine Soil) community is dominated by Black Spruce and Trembling Aspen with Balsam Fir, White Spruce and White Birch. The understory includes shrubs of those species present in the canopy as well as Dwarf Raspberry, Speckled Alder, Swamp Red Currant, serviceberries, Northern Mountain-ash, Twinflower and Prickly Rose. Ground cover species include Sarsaparilla, Naked Mitrewort, violets, bedstraws, Wood Anemone, Goldthread, sedges, Shining Clubmoss, Rose Twisted-stalk and Wild Strawberry.

The B034/ES2 (Dry, Sandy: Jack Pine – Black Spruce Dominated / Jack Pine – Coarse Soil) community is dominated by Jack Pine and may be associated with Black Spruce and some White Birch. The understory is shrub-poor and includes shrubs of those species present in the canopy as well as blueberries, wintergreen, Bunchberry, Trailing Arbutus (*Epigaea repens*), Sheep-laurel (*Kalmia angustifolia*), Creeping Snowberry, Bush Honeysuckle, Twinflower and serviceberries. Ground cover is herb-poor and includes Wild Lily-of-the-valley (*Maianthemum canadense*), Bunchberry and Wild Sarsaparilla. Feathermosses and lichens are also common.

The B049/ES4 (Dry to Fresh, Coarse: Jack Pine - Black Spruce Dominated / Black Spruce – Jack Pine – Coarse Soil) community is dominated by Black Spruce and Jack Pine and may be associated with White Birch and Balsam Fir. There are a medium number of shrubs in the understory which includes shrubs of those species present in the canopy as well as blueberries, Bunchberry, Creeping Snowberry, Twinflower, Common Labrador Tea (*Ledum groenlandicum*), Trailing Arbutus , Bush Honeysuckle, Sheep-laurel, serviceberries. Ground cover is herb-poor and includes Wild Lily-of-the-valley, Blue Bead Lily and Goldthread. Feathermosses are abundant.

The B082/ES5f (Fresh, Clayey: Black Spruce - Jack Pine Dominated / Black Spruce – Fine Soil) community is dominated by Black Spruce with Balsam Fir, Jack Pine and White Birch. The understory is shrub poor and includes shrubs of those species present in the canopy as well as Creeping Snowberry, Bunchberry, blueberries, Twinflower, Dwarf Raspberry, Prickly Rose and Common Labrador Tea. Ground cover is herb-poor and includes Sweet Coltsfoot, Goldthread, Blue Bead Lily and Woodland Horsetail. Feathermosses are abundant.

The B114/ES5m (Moist, Fine: Black Spruce - Pine Conifer / Black Spruce – Medium Soil) community is dominated by Black Spruce and Jack Pine with Trembling Aspen, Balsam Fir and White Birch. The understory is shrub poor and includes shrubs of those species present in the canopy as well as Bunchberry, blueberries, Twinflower, Serviceberries, Northern Mountain-ash, Bush Honeysuckle, Common Labrador Tea and Prickly Rose. Ground cover is herb-poor and includes Blue Bead Lily, Large-leaved Aster, Sarsaparilla, Goldthread and Starflower. Feathermosses are abundant.

The B050/ES3 (Dry to Fresh, Coarse: Pine - Black Spruce Conifer / White Birch – Trembling Aspen – Black Spruce – Coarse Soil) community is dominated by White Birch, Trembling Aspen, Jack Pine and Black Spruce with Balsam Fir and White Spruce. Medium shrub cover includes shrubs of those species present in the canopy as well as blueberries, Twinflower, Creeping Snowberry, Bush Honeysuckle and Bunchberry. Ground cover is herb-poor and includes Wild Sarsaparilla, Blue Bead Lily, Starflower, Goldthread, Large-leaved Aster and Ground Pine.

The B014/ES1r (Very Shallow, Dry to Fresh: Conifer / White Spruce – White Birch – Very Shallow Soil – Species Rich) community is dominated by Balsam Fir, White Spruce, White Birch, Trembling Aspen, Jack Pine and Black Spruce. The understory is shrub poor and includes shrubs of those species present in the canopy as well as blueberries, Bunchberry, Bush Honeysuckle, Beaked Hazel and Twinflower. Ground cover is herb-poor and includes Wild Sarsaparilla, Large-leaved Aster, Goldthread, Bracken Fern, Bunchberry, violets and Naked Mitrewort.

3.2.3 Wetland Deciduous Swamp

One wetland deciduous swamp community is found within the regional study area. The B130/ES10/dS (Intolerant Hardwood Swamp / Trembling Aspen – Black Spruce – Balsam Poplar – Moist Soil / deciduous Swamp) community covers 0.2% (157 ha) of the regional study area. This community is dominated by Trembling Aspen with Black Spruce, White Spruce, White Birch, Jack Pine and Black Ash. The understory includes shrubs of those species present in the canopy as well as Speckled Alder, Wild Red Raspberry, Prickly Rose, Mountain Maple, Red-osier Dogwood, serviceberries, currants and Twinflower. Ground cover is herb-rich and includes violets, Naked Mitrewort, Large-leaved Aster, Blue Bead Lily, Sweet Coltsfoot, sedges, Goldthread, Spinulose Wood Fern, Oak Fern and Starflower.

3.2.4 Wetland Coniferous Swamp

Eight wetland coniferous swamp communities are found within the regional study area (21.4% cover; 15,806 ha). The B127/ES11/cS (Organic Poor Conifer Swamp / Black Spruce – Labrador-tea – Organic Soil / coniferous Swamp) community is dominated by Black Spruce. The understory is shrub-poor and includes shrub Black Spruce, Common Labrador Tea, blueberries, Bog Laurel, Small Cranberry, Bunchberry, Leatherleaf (*Chamaedaphne calyculata*) and Creeping Snowberry. Ground cover is herb-poor and includes sedges such as Goldthread. Feathermosses and sphagnum mosses are abundant. Wetland coniferous swamp communities are typically found on organic soils.

The B224/ES9r/cS (Mineral Rich Conifer Swamp / White Spruce – Balsam Fir – White Cedar – Moist Soil – Species Rich / coniferous Swamp) community is dominated by White Spruce with Balsam Fir, White Birch, Black Spruce and Eastern White Cedar. A medium number of shrubs are present in the understory and include shrubs of those species present in the canopy as well as Northern Mountain-ash, Mountain Maple, Speckled Alder, currants, Red-osier Dogwood, Wild Red Raspberry and Twinflower. Ground cover is abundant in feathermosses and is herb-rich including species such as Wild Sarsaparilla, Goldthread, Starflower, Wood Anemone, Naked Mitrewort, Oak Fern, Spinulose Wood Fern, Sweet Coltsfoot, Northern Bluebells and Northern Lady Fern. This community is found on moist sandy to clayey soils.

The B222/ES8/cS (Black Spruce – Feathermoss – Sphagnum – Moist Soil / Mineral Poor Conifer Swamp / coniferous Swamp) community is dominated by Black Spruce and may be associated with Balsam Fir, Jack Pine and Larch. The understory is shrub poor and includes shrubs of those species present in the canopy as well as Common Labrador Tea, blueberries, Creeping Snowberry, Sheep-laurel and Twinflower. Ground cover is abundant in feathermosses andsphagnum mosses and is herb-rich including species such as Goldthread, sedges, Woodland Horsetail and Three-leaved Smilacina. This community is found on moist, sandy to clayey soils.

The B223/ES9p/cS (Mineral Intermediate Conifer Swamp / Black Spruce – Larch – Moist Soil – Species Poor / coniferous Swamp) community is dominated by Black Spruce and may be associated with Larch, Balsam Fir, White Birch and Jack Pine. A medium number of shrubs are present in the understory and include shrubs of those species present in the canopy as well as Speckled Alder, Creeping Snowberry, Common Labrador Tea, Dwarf Raspberry, blueberries, Prickly Rose, serviceberries, Northern Mountain-ash and Swamp Red Currant. Ground cover is abundant in feathermosses and is herb-rich including species such as Goldthread, sedges, Blue Bead Lily, Woodland Horsetail, violets, Naked Mitrewort, Wood Anemone and Thee-leaved Smilacina. This community is found on moist, sandy to clayey soils.

The B129/ES13p/cS (Organic Rich Conifer Swamp / Black Spruce – Larch – Speckled Alder – Organic Soil – Species Poor / coniferous Swamp) community is dominated by Black Spruce with Larch and Balsam Fir. The understory is shrub-rich and includes shrubs of those species present in the canopy as well as Speckled Alder, Common Labrador Tea, Creeping Snowberry, Dwarf Raspberry, Currants, Red-osier Dogwood, serviceberries, Small Cranberry, blueberries, Twinflower, Northern Honeysuckle and Northern Mountain-ash. Ground cover is abundant in feathermosses and sphagnum mosses and is herb-rich including species such as Naked Mitrewort, Goldthread, sedges, Bedstraws, Oak Fern, Woodland Horsetail, Starflower, Three-leaved Smilacina, Wild Sarsaparilla, Wood Anemone and Sweet Coltsfoot. This community is typically found on organic soils.

The B129/ES13r/cS (Organic Rich Conifer Swamp / White Cedar – Black Spruce – Organic Soil – Species Rich / coniferous Swamp) community is dominated by Eastern White Cedar with Black Spruce, Balsam Fir, White Spruce, White Birch, Black Ash and Larch. The understory includes shrubs of those species present in the canopy as well as Speckled Alder, Red-osier Dogwood, Canada Honeysuckle, Mountain Maple, Common Labrador Tea, Dwarf Raspberry, Bunchberry and Creeping Snowberry. Ground cover is abundant in feathermosses and is herb-rich including species such as violets, sedges, Starflower, Naked Mitrewort, Wood Anemone, Goldthread, bedstraws, Woodland Horsetail, Rose Twisted-stalk and Northern Bluebells. This community is typically found on organic soils.

The B128/ES12/cS (Organic Intermediate Conifer Swamp / Black Spruce – Larch – Labrador-tea – Organic Soil / coniferous Swamp) community is dominated by Black Spruce with Larch and Balsam Fir. The understory includes shrub Black Spruce and Balsam Fir as well as Common Labrador Tea, Speckled Alder, Bunchberry, Twinflower, blueberries, Dwarf Raspberry, Small Cranberry and Creeping Snowberry. Ground cover is abundant in feathermosses and sphagnum mosses but is herb-poor with species such as sedges, Goldthread, Naked Mitrewort, Woodland Horsetail and Three-leaved Smilacina. This community is typically found on organic soils.

The B137/ES14/cS (Black Spruce – Leatherleaf – Organic Soil / Sparse Treed Bog / coniferous Swamp) community is dominated by Black Spruce and may be associated with Larch. The

understory includes shrubs of those species present in the canopy as well as Common Labrador Tea, Small Cranberry, blueberries, Bog Laurel, Dwarf Raspberry and Bog Rosemary. Ground cover is abundant in feathermosses but is herb-poor with species such as sedges, Goldthread, Woodland Horsetail and Three-leaved Smilacina. This community is typically found on organic soils.

3.2.5 Non-forested Wetland Communities

Five non-forested wetland communities occur within the regional study area (7.1% cover; 5,206 ha).

The B136/lsF (Sparse Treed Fen / low shrub-dominated Fen) community covers 1.3% (958 ha) of the regional study area. This community is dominated by shrubs less than 1 m tall, however, a sparse treed canopy of >10% and <25% cover is present. The canopy is mostly low treed (<10 m) and is dominated by Black Spruce and Larch. Common shrubs species include Leatherleaf, Bog Laurel, Bog Rosemary, Dwarf Birch, Common Labrador Tea, Small Cranberry and Creeping Snowberry. Ground cover is herb-poor and may include sedges, cotton-grasses, Three-leaved Smilacina, Woodland Horsetail and Northern Pitcher-plant (*Sarracenia purpurea*). Sphagnum moss is abundant.

The B139/B140/lsF (Poor Fen / Open Moderately Rich Fen / low shrub-dominated Fen) community covers 0.5% (403 ha) of the regional study area. This community is dominated by shrubs less than 1 m tall. Tree species are uncommon. Common shrubs species include Leatherleaf, Bog Laurel, Bog Rosemary, Dwarf Birch, Common Labrador Tea and Small Cranberry. Ground cover is herb-poor and may include sedges, cotton-grasses and Northern Pitcher-plant. Sphagnum mosses are abundant.

The B142/B144/neM (Mineral Meadow Marsh / Organic Meadow Marsh / narrow-leaved emergent vegetation-dominated Marsh) community covers 1.5% (1,080 ha) of the regional study area. This community is dominated by narrow-leaved emergent species such as graminoids. Species include Canada Blue-joint, sedges, bulrushes and Marsh Cinquefoil.

The B148/B149/reM (Mineral Shallow Marsh / Organic Shallow Marsh / robust-leaved emergent vegetation-dominated Marsh) community covers 0.04% (31 ha) of the regional study area. This community is dominated by robust-emergent vegetation such as cattails and Blue Iris. Other herbaceous species may include grasses, sedges, Water Horsetail and bedstraws. Submergent and floating-leaved species may also be present.

The B134/B135/tsS (Mineral Thicket Swamp / Organic Thicket Swamp / tall shrub-dominated Swamp) community covers 3.7% (2,735 ha) of the regional study area. This community is dominated by tall deciduous shrubs such as Speckled Alder, willow species, Sweet Gale, White Meadowsweet, Red-osier Dogwood and currants. Tree species are uncommon. Ground cover is

herb-rich and includes bedstraws, Canada Blue-joint, sedges, Marsh Marigold, violets and horsetails.

3.2.6 Other Communities

Polygons defined as B044 (Dry to Fresh, Coarse: Field), B045 (Dry to Fresh, Coarse: Meadow) and “Anthropogenic Ecosite” include agricultural fields, grass-dominated meadows, roads and associated corridors, residential areas, gravel pits and other areas cleared of vegetation. Together, these communities cover 1.9% of the regional study area (1,402 ha).

3.3 Wildlife

The following subsections provide the results of the desktop review of terrestrial wildlife and the detailed field program. In general, wildlife species identified within the regional study area are typical of mixed boreal forest ecosystems. A complete list of the wildlife species identified through a review of secondary source information and recorded during field surveys are provided in Tables 3-3 to 3-8. Tables include lists of species, their federal and provincial ranks and their protective status (if any).

3.3.1 Birds

Data from the Atlas of Breeding Birds in Ontario (OBBA; Cadman *et al.*, 2007) and eBird.org describes 107 species as possible, probable or confirmed breeders in the vicinity of the regional study area (Audubon and Cornell Lab of Ornithology, 2013; see Table 3-3). However, due to the northern position of the regional study area, the avian diversity of the region may be under-reported in this database as surveys in this region are not as comprehensive.

According to the OBBA, the following SAR (provincially designated as *Threatened*) could occur within the regional study area: Chimney Swift (*Chaetura pelagica*), Barn Swallow (*Hirundo rustica*) and Eastern Whip-poor-will (*Antrostomus vociferous*). The following species of *Special Concern* (provincially designated) could also occur within the regional study area: Bald Eagle (*Haliaeetus leucocephalus*), Black Tern (*Chlidonias niger*), Canada Warbler (*Cardellina canadensis*), Common Nighthawk (*Chordeiles minor*) and Olive-sided Flycatcher (*Contopus cooperi*). The Rusty Blackbird (*Euphagus carolinus*) is listed federally as *Special Concern* and may also ocurr within the vicinity of the regional study area. SAR listed in the NHIC for the regional study area include Bald Eagle and Black Tern.

Five avian SAR were observed during the 2013 field surveys, including Bald Eagle, Canada Warbler, Common Nighthawk, Rusty Blackbird and Olive-sided Flycatcher. SAR are further discussed in Section 3.4.

Table 3-3: Compiled Bird Species List

Common Name	Scientific Name	Observed on Site	Potentially Breeding on Site	Provincial S-Rank[1]	Provincial Designation (ESA)[2]	Federal Designation (SARA)[3]	Other Protective Acts[4]	Partners In Flight Priority Species
Alder Flycatcher	*Empidonax alnorum*	■	■	S5B	—	—	MBCA	Yes
American Bittern	*Botaurus lentiginosus*	■	—	S4B	—	—	MBCA	No
American Black Duck	*Anas rubripes*	■	—	S4	—	—	MBCA	No
American Crow	*Corvus brachyrhynchos*	■	■	S5B	—	—	—	No
American Goldfinch	*Carduelis tristis*	■	■	S5B	—	—	MBCA	No
American Kestrel	*Falco sparverius*	—	■	S5	—	—	FWCA	No
American Redstart	*Setophaga ruticilla*	■	■	S5B	—	—	MBCA	No
American Robin	*Turdus migratorius*	■	■	S5B	—	—	MBCA	No
American Woodcock	*Scolopax minor*	■	■	S5N	—	—	MBCA	No
Bald Eagle	*Haliaeetus leucocephalus*	■	■	S4	SC	NAR	FWCA	Yes
Barred Owl	*Strix varia*	—	■	S4S5	—	—	FWCA	No
Bay-breasted Warbler	*Setophaga castanea*	■	■	S5B	—	—	MBCA	Yes
Belted Kingfisher	*Ceryle alcyon*	■	■	S4B	—	—	FWCA	Yes
Black Tern	*Chlidonias niger*	■	—	S3B	SC	NAR	MBCA	No
Black-and-white Warbler	*Mniotilta varia*	■	■	S5B	—	—	MBCA	No
Black-backed Woodpecker	*Picoides arcticus*	■	■	S4B	—	—	MBCA	No
Blackburnian Warbler	*Setophaga fusca*	■	■	S5B	—	—	MBCA	Yes
Black-capped Chickadee	*Poecile atricapillus*	■	■	S5	—	—	MBCA	No
Blackpoll Warbler	*Setophaga striata*	—	■	S4B	—	—	MBCA	No
Black-throated Blue Warbler	*Setophaga caerulescens*	■	■	S5B	—	—	MBCA	Yes
Black-throated Green Warbler	*Setophaga virens*	■	■	S5B	—	—	MBCA	Yes
Blue Jay	*Cyanocitta cristata*	■	■	S5B	—	—	FWCA	No
Blue-headed Vireo	*Vireo solitarius*	■	■	S5B	—	—	MBCA	Yes
Blue-winged Teal	*Anas discors*	■	—	S4	—	—	MBCA	No
Bonaparte's Gull	*Larus philadelphia*	■	■	S4B, S4N	—	—	MBCA	No
Boreal Chickadee	*Poecile hudsonica*	■	■	S5	—	—	MBCA	No
Brewer's Blackbird	*Euphagus cyanocephalus*	■	—	S4B	—	—	FWCA	No
Broad-winged Hawk	*Buteo platypterus*	■	■	S5	—	—	FWCA	Yes
Brown Creeper	*Certhia americana*	■	■	S5B	—	—	MBCA	No
Brown Thrasher	*Toxostoma rufum*	■	—	S4B	—	—	MBCA	Yes
Bufflehead	*Bucephala albeola*	—	■	S4	—	—	MBCA	No
Canada Goose	*Branta canadensis*	—	■	S5	—	—	MBCA	No
Canada Warbler	*Cardellina canadensis*	■	■	S4B	SC	THR	MBCA	Yes

Common Name	Scientific Name	Observed on Site	Potentially Breeding on Site	Provincial S-Rank[1]	Provincial Designation (ESA)[2]	Federal Designation (SARA)[3]	Other Protective Acts[4]	Partners In Flight Priority Species
Cape May Warbler	*Setophaga tigrina*	■	■	S5B	—	—	MBCA	Yes
Cedar Waxwing	*Bombycilla cedrorum*	■	■	S5B	—	—	MBCA	No
Chestnut-sided Warbler	*Setophaga pensylvanica*	■	■	S5B	—	—	MBCA	Yes
Chimney Swift	*Chaetura pelagica*	■	—	S4B, S4N	THR	THR	MBCA	Yes
Chipping Sparrow	*Spizella passerina*	■	■	S5B	—	—	MBCA	No
Common Goldeneye	*Quiscalus quiscula*	■	■	S5	—	—	MBCA	No
Common Grackle	*Gavia immer*	■	■	S5B	—	—	—	No
Common Loon	*Mergus merganser*	■	■	S5B, S5N	NAR	NAR	MBCA	No
Common Merganser	*Gallinula galeata*	■	■	S5B, S5N	—	—	MBCA	No
Common Nighthawk	*Chordeiles minor*	■	—	S4B	SC	THR	MBCA	Yes
Common Raven	*Corvus corax*	■	■	S5B	—	—	FWCA	No
Common Yellowthroat	*Geothlypis trichas*	■	■	S5B	—	—	MBCA	Yes
Cuckoo sp.	*Coccyzus sp.*	■	—	—	—	—	—	No
Dark-eyed Junco	*Junco hyemalis*	■	■	S5B	—	—	MBCA	No
Downy Woodpecker	*Picoides pubescens*	—	■	S5B	—	—	MBCA	No
Eastern Bluebird	*Sialia sialis*	—	■	S5B	NAR	NAR	MBCA	No
Eastern Kingbird	*Tyrannus tyrannus*	■	—	S4B	—	—	MBCA	Yes
Eastern Whip-poor-will	*Antrostomus vociferus*	■	—	S4B	THR	THR	MBCA	Yes
European Starling	*Sturnus vulgaris*	■	—	SNA	—	—	—	No
Evening Grosbeak	*Coccothraustes vespertinus*	■	■	S4B	—	—	MBCA	No
Golden-crowned Kinglet	*Regulus satrapa*	■	■	S5B	—	—	MBCA	No
Gray Jay	*Perisoreus canadensis*	■	■	S5B	—	—	FWCA	No
Great Blue Heron	*Ardea herodias*	—	■	S5	—	—	MBCA	No
Great Gray Owl	*Strix nebulosa*	—	■	S5	—	—	FWCA	No
Hairy Woodpecker	*Picoides villosus*	■	■	S5B	—	—	MBCA	No
Hermit Thrush	*Catharus guttatus*	■	■	S5B	—	—	MBCA	No
Herring Gull	*Larus argentatus*	■	—	S5B, S5N	—	—	MBCA	No
Hooded Merganser	*Lophodytes cucullatus*	■	■	S5B, S5N	—	—	MBCA	No
House Sparrow	*Passer domesticus*	■	—	SNA	—	—	—	No
Killdeer	*Charadrius vociferus*	■	—	S5B	—	—	MBCA	No
Least Flycatcher	*Empidonax minimus*	■	■	S4B	—	—	MBCA	Yes
LeConte's Sparrow	*Ammodrammus leconteii*	■	—	S4B	—	—	MBCA	No
Lincoln's Sparrow	*Melospiza lincolnii*	■	■	S5B	—	—	MBCA	Yes
Magnolia Warbler	*Setophaga magnolia*	■	■	S5B	—	—	MBCA	Yes
Mallard	*Anas platyrhynchos*	■	■	S5	—	—	MBCA	No
Merlin	*Falco columbarius*	■	■	S4	NAR	NAR	FWCA	No
Mourning Dove	*Zenaida macroura*	■	—	S5	—	—	MBCA	No
Mourning Warbler	*Geothlypis philadelphia*	■	■	S4B	—	—	MBCA	Yes

Common Name	Scientific Name	Observed on Site	Potentially Breeding on Site	Provincial S-Rank[1]	Provincial Designation (ESA)[2]	Federal Designation (SARA)[3]	Other Protective Acts[4]	Partners In Flight Priority Species
Nashville Warbler	*Oreothlypis ruficapilla*	■	■	S5B	—	—	MBCA	Yes
Northern Flicker	*Colaptes auratus*	■	■	S4B	—	—	MBCA	Yes
Northern Harrier	*Circus cyaneus*	■	■	S4B	NAR	NAR	MBCA	No
Northern Parula	*Setophaga americana*	■	■	S4B	—	—	MBCA	No
Northern Saw-whet Owl	*Aegolius acadicus*	■	■	S4	—	—	FWCA	No
Northern Waterthrush	*Parkesia noveboracensis*	■	■	S5B	—	—	MBCA	No
Olive-sided Flycatcher	*Contopus borealis*	■	■	S4B	SC	THR	MBCA	Yes
Orange-crowned Warbler	*Oreothlypis celata*	—	■	S4B	—	—	MBCA	No
Osprey	*Pandion haliaetus*	■	■	S5B	—	—	FWCA	No
Ovenbird	*Seiurus aurocapilla*	■	■	S4B	—	—	MBCA	No
Palm Warbler	*Setophaga palmarum*	—	■	S5B	—	—	MBCA	Yes
Philadelphia Vireo	*Vireo philadelphicus*	■	■	S5B	—	—	MBCA	Yes
Pileated Woodpecker	*Dryocopus pileatus*	■	■	S5	—	—	MBCA	No
Pine Grosbeak	*Pinicola enucleator*	—	■	S4B	—	—	MBCA	No
Pine Siskin	*Carduelis pinus*	■	—	S5B	—	—	MBCA	No
Purple Finch	*Haemorhous purpureus*	■	■	S5B	—	—	MBCA	Yes
Red Crossbill	*Loxia curvirostra*	—	■	S4B	—	—	MBCA	Yes
Red-breasted Nuthatch	*Sitta canadensis*	■	■	S5	—	—	MBCA	No
Red-eyed Vireo	*Vireo olivaceus*	■	■	S5B	—	—	MBCA	No
Red-tailed Hawk	*Buteo jamaicensis*	■	■	S5	NAR	NAR	FWCA	No
Red-winged Blackbird	*Agelaius phoeniceus*	■	—	S4	—	—	—	No
Ring-billed Gull	*Larus delawarensis*	■	■	S5B, S5N	—	—	MBCA	No
Ring-necked Duck	*Aythya collaris*	■	■	S5	—	—	MBCA	No
Rock Pigeon	*Columba livia*	■	—	SNA	—	—	MBCA	No
Rose-breasted Grosbeak	*Pheucticus ludovicianus*	■	■	S4B	—	—	MBCA	Yes
Ruby-crowned Kinglet	*Regulus calendula*	■	■	S4B	—	—	MBCA	—
Ruby-throated Hummingbird	*Archilochus colubris*	■	■	S5B	—	—	MBCA	—
Ruffed Grouse	*Bonasa umbellus*	■	■	S5B	—	—	FWCA	Yes
Rusty Blackbird	*Euphagus carolinus*	■	■	S4B	—	SC	FWCA	Yes
Sandhill Crane	*Grus canadensis*	—	■	S5B	NAR	NAR	MBCA	No
Savannah Sparrow	*Passerculus sandwichensis*	■	—	S4B	—	—	MBCA	No
Scarlet Tanager	*Piranga olivacea*	—	■	S4B	—	—	MBCA	No
Sharp-shinned Hawk	*Accipiter striatus*	■	■	S5	NAR	NAR	FWCA	No
Song Sparrow	*Melospiza melodia*	■	—	S5B	—	—	MBCA	No
Sora	*Porzana carolina*	■	—	S4B	—	—	MBCA	No

Common Name	Scientific Name	Observed on Site	Potentially Breeding on Site	Provincial S-Rank[1]	Provincial Designation (ESA)[2]	Federal Designation (SARA)[3]	Other Protective Acts[4]	Partners In Flight Priority Species
Spotted Sandpiper	*Actitis macularia*	■	■	S5	—	—	MBCA	No
Spruce Grouse	*Falcipennis canadensis*	■	■	S5B	—	—	FWCA	No
Swainson's Thrush	*Catharus ustulatus*	■	■	S4B	—	—	MBCA	No
Swamp Sparrow	*Melospiza georgiana*	■	■	S5B	—	—	MBCA	Yes
Tennessee Warbler	*Oreothlypis peregrina*	■	■	S5B	—	—	MBCA	Yes
Tree Swallow	*Tachycineta bicolor*	■	—	S4B	—	—	MBCA	No
Turkey Vulture	*Cathartes aura*	—	■	S5B	—	—	FWCA	No
Veery	*Catharus fuscescens*	■	■	S4B	—	—	MBCA	Yes
White-throated Sparrow	*Zonotrichia albicollis*	■	■	S5B	—	—	MBCA	Yes
White-winged Crossbill	*Loxia leucoptera*	■	—	S5B	—	—	MBCA	No
Wilson's Snipe	*Gallinago delicata*	■	■	S5B	—	—	MBCA	No
Wilson's Warbler	*Cardellina pusilla*	—	■	S4B	—	—	MBCA	No
Winter Wren	*Troglodytes troglodytes*	■	■	S5B	—	—	MBCA	No
Wood Thrush	*Hylocichla mustelina*	■	—	S4B	—	—	MBCA	Yes
Woodpecker sp		—	■	—	—	—	—	No
Yellow Warbler	*Setophaga petechia*	■	■	S5B	—	—	MBCA	No
Yellow-bellied Flycatcher	*Empidonax flaviventris*	■	■	S5B	—	—	MBCA	Yes
Yellow-bellied Sapsucker	*Sphyrapicus varius*	■	■	S5B	—	—	MBCA	Yes
Yellow-rumped Warbler	*Setophaga coronata*	■	■	S5B	—	—	MBCA	No

Notes:
■ – Specie meets criteria
[1] S-Rank - S4B - Apparently Secure Species; S5B – Secure Species; SNA – Non-native.
[2] ESA - *Endangered Species Act, 2007*
[3] SARA - *Species at Risk Act, 2003* – Schedule 1: Full protection under SARA
[4] MBCA – *Migratory Birds Conventions Act*; FWCA – *Fish and Wildlife Conservation Act*
β Not previously identified as occurring in the regional study area in the Atlas of Breeding Birds of Ontario.

A total of 84 bird species were recorded within the local study area during standardized point counts surveys, 12 of which had not previously been identified in the local study area (see Table 3-4). Eleven additional bird species were recorded during the June field surveys, but not during standardized point counts. Although not identified during the breeding bird surveys, the presence of suitable habitat suggests 24 additional bird species identified in the records review are potentially breeding in the local study area. Of the 124 total species identified through the review of background information and field surveys, 117 total bird species are expected to be breeding or potentially breeding within the local study area. Eighty-seven of the 117 (74.4%) bird species are seasonal migrants, occurring in northern Ontario only during the summer breeding season.

Table 3-4: 2013 Breeding Bird Survey Results

Common Name	Number of Point Counts Observed	Percentage Occurrence (per 182 Stations)	Total Birds Observed[1]	Average Birds per Count[2]
Nashville Warbler	152	83.52	322	1.77
Magnolia Warbler	129	70.88	248	1.36
Ovenbird	127	69.78	315	1.73
Red-eyed Vireo	121	66.48	224	1.23
White-throated Sparrow	117	64.29	279	1.53
Yellow-rumped Warbler	108	59.34	187	1.03
Swainson's Thrush	102	56.04	141	0.77
Winter Wren	100	54.95	143	0.79
Ruby-crowned Kinglet	95	52.20	148	0.81
Hermit Thrush	88	48.35	134	0.74
Red-breasted Nuthatch	67	36.81	82	0.45
Yellow-bellied Sapsucker	64	35.16	84	0.46
Northern Parula	63	34.62	89	0.49
Black-throated Blue Warbler	58	31.87	84	0.46
Ruffed Grouse	56	30.77	62	0.34
Golden-crowned Kinglet	54	29.67	63	0.35
Black-capped Chickadee	53	29.12	61	0.34
Blue-headed Vireo	46	25.27	51	0.28
Yellow-bellied Flycatcher	45	24.73	66	0.36
Blackburnian Warbler	43	23.63	56	0.31
Common Raven	43	23.63	63	0.35
Black-throated Green Warbler	39	21.43	66	0.36
Blue Jay	38	20.88	46	0.25
Black-and-white Warbler	29	15.93	35	0.19
Downy Woodpecker	25	13.74	25	0.14
Mourning Warbler	23	12.64	27	0.15
American Crow	22	12.09	23	0.13
Least Flycatcher	22	12.09	34	0.19
Chestnut-sided Warbler	20	10.99	33	0.18
Brown Creeper	19	10.44	19	0.10
Veery	18	9.89	31	0.17
Common Yellowthroat	17	9.34	33	0.18
Alder Flycatcher	16	8.79	23	0.13

Common Name	Number of Point Counts Observed	Percentage Occurrence (per 182 Stations)	Total Birds Observed[1]	Average Birds per Count[2]
American Redstart	16	8.79	19	0.10
American Robin	16	8.79	21	0.12
Northern Flicker	15	8.24	16	0.09
Common Loon	14	7.69	15	0.08
Pileated Woodpecker	14	7.69	15	0.08
Bay-breasted Warbler	13	7.14	20	0.11
Canada Goose	10	5.49	67	0.37
Swamp Sparrow	10	5.49	18	0.10
Tennessee Warbler	10	5.49	15	0.08
Hairy Woodpecker	9	4.95	9	0.05
Purple Finch	9	4.95	11	0.06
Canada Warbler	8	4.40	9	0.05
Dark-eyed Junco	8	4.40	10	0.05
Broad-winged Hawk	7	3.85	7	0.04
Woodpecker sp	7	3.85	8	0.04
Boreal Chickadee	6	3.30	6	0.03
Gray Jay	6	3.30	8	0.04
Northern Waterthrush	6	3.30	8	0.04
Cape May Warbler	5	2.75	5	0.03
Cedar Waxwing	5	2.75	5	0.03
Evening Grosbeak	5	2.75	5	0.03
Palm Warbler	5	2.75	6	0.03
Rose-breasted Grosbeak	5	2.75	5	0.03
Belted Kingfisher	4	2.20	4	0.02
Chipping Sparrow	4	2.20	5	0.03
Lincoln's Sparrow	4	2.20	5	0.03
Philadelphia Vireo	4	2.20	4	0.02
American Bittern	3	1.65	3	0.02
Wilson's Snipe	3	1.65	3	0.02
Black-backed Woodpecker	2	1.10	2	0.01
Blackpoll Warbler	2	1.10	2	0.01
Common Grackle	2	1.10	5	0.03
Sandhill Crane	2	1.10	2	0.01
American Goldfinch	1	0.55	1	0.01
American Kestrel	1	0.55	1	0.01
Barred Owl	1	0.55	1	0.01
Bufflehead	1	0.55	3	0.02
Common Goldeneye	1	0.55	1	0.01
Hooded Merganser	1	0.55	2	0.01
Mallard	1	0.55	3	0.02
Olive-sided Flycatcher	1	0.55	1	0.01
Orange-crowned Warbler	1	0.55	1	0.01
Osprey	1	0.55	1	0.01
Pine Grosbeak	1	0.55	1	0.01
Red Crossbill	1	0.55	1	0.02
Ring-billed Gull	1	0.55	3	0.01
Ruby-throated Hummingbird	1	0.55	1	0.01
Scarlet Tanager	1	0.55	1	0.01

Common Name	Number of Point Counts Observed	Percentage Occurrence (per 182 Stations)	Total Birds Observed[1]	Average Birds per Count[2]
Spotted Sandpiper	1	0.55	1	0.01
Spruce Grouse	1	0.55	2	0.01
Wilson's Warbler	1	0.55	1	0.01
Yellow Warbler	1	0.55	1	0.01

Notes:
[1] Calculated from the sum of the survey maximum number of birds detected at each point count station. Two surveys conducted per station.
[2] Calculated from sum of the maximum number of birds observed divided by the number of point count station (n=38).

The five most common birds include the Nashville Warbler (*Oreothlypis ruficapilla*), Ovenbird (*Seiurus aurocapilla*), White-throated Sparrow (*Zonotrichia albicollis*), Magnolia Warbler (*Setophaga magnolia*) and Red-eyed Vireo (*Vireo olivaceus*; see Table 3-4). Recorded observations for these species include: 322 Nashville Warblers (average birds/count = 1.77 percent occurrence/count = 83.52%), 315 Ovenbirds (average birds/count = 1.73, percent occurrence/count = 69.78%), 279 White-throated Sparrows (average birds/count = 1.53, percent occurrence/count = 64.29%), 248 Magnolia Warblers (average birds/count = 1.36, percent occurrence/count = 70.88%) and 224 Red-eyed Vireos (average birds/count = 1.23, percent occurrence/count = 66.48%); see Table 3-4). Of the 84 bird species (3,667 total birds) recorded, the Nashville Warbler, Ovenbird, White-throated Sparrow, Magnolia Warbler and Red-eyed Vireo represented 37.9.0% of all observations.

Bird species diversity ranged from 5 to 23 species at point count stations surveyed twice and averaged 11.6 bird species per station. In general, species diversity was greater at study sites with more mature forest consisting of mixed canopy species composition and where habitat diversity was greater.

One Common Nighthawk was recorded during crepuscular bird surveys, though no Eastern Whip-poor-wills were recorded. Other incidental crepuscular and nocturnal bird species recorded incidentally during crepuscular bird surveys included Northern Saw-whet Owl (*Aegolius acadicus*), Barred Owl (*Strix varia*), American Woodcock (*Scolopax minor*) and Wilson's Snipe (*Gallinago delicata*). One Great Grey Owl (*Strix nebulosa*) was recorded during the spring aerial survey. American Woodcock and Wilson's Snipe were uncommon in the local study area, possibly due to the high prevalence of forested land in the local study area.

The April aerial stick nest survey revealed a total of 15 stick nests across the regional study area and eight of these nests were confirmed to be active (see Table 3-5 and Figure 3-2).

Table 3-5: Nests Observed During the Spring Aerial Survey

Common Name	Number of Stick Nests		Total Nests	Total Active Nests
	Active	Inactive at the time of survey		
Bald Eagle	1	0	1	1
Bald Eagle or Osprey	0	2	2	0
Common Raven	6	1	7	6
Sharp-shinned Hawk	1	0	1	1
Unidentified Hawk	0	4	4	0

Active nests of three bird species were observed: Bald Eagle, Sharp-shinned Hawk and Common Raven. Seven nests which were identified as inactive at the time of survey were deemed to be in good condition and, for Project planning, should be considered to be active based on the definition provide in MNR 2010a. Four of these inactive nests were medium-sized stick nests occurring at the first fork of poplar trees, and therefore are likely used by small hawk species such as Sharp-shinned Hawk or Broad-winged Hawk. A Red-tailed Hawk nest was later recorded during crepuscular breeding bird surveys in proximity to the existing hydro corridor.

One active Bald Eagle nest was observed at the southern end of the Cross-Country TLA within the proposed regional study area (see Figure 3-2). Two other large stick nests were observed at the southern end of the Cross-Country TLA and likely belong to either Bald Eagle or Osprey. These two nests were inactive at the time of the survey but were in a good condition and considered to be useable. All large stick nests were found within typical Bald Eagle and Osprey nesting habitat, along the shores of fish-bearing lakes and streams. Bald Eagles were observed flying near to the regional study area during both the winter and spring aerial surveys while two Ospreys were observed later during breeding bird surveys.

Six active Common Raven nests were found (see Table 3-5) and five of these were located on towers of the existing transmission line along the Shiningtree TLA (see Figure 3-2).

3.3.2 Mammals

The review of the Atlas of the Mammals of Ontario indicated that 41 mammalian species may occur in the general vicinity of the regional study area (Dobbyn, 1994). Winter and spring aerial surveys, bat acoustic detection surveys, as well as incidental observations made while conducting other surveys revealed evidence of 16 mammal species. Species recorded included Hoary Bat (*Lasiurus cinereus*), Little Brown Myotis (*Myotis lucifugus*), Silver-haired Bat (*Lasionycteris noctivagans*), Eastern Red Bat (Lasiurus borealis), Beaver, Snowshoe Hare (*Lepus americanus*), Red Squirrel (*Tamiasciurus hudsonicus*), Porcupine (*Erethizon dorsatum*), Grey Wolf, Red Fox (*Vulpes vulpes*), American Black Bear (*Ursus americana*), American Marten, American Mink, Striped Skunk (*Mephitis mephitis*), River Otter, Canada Lynx, White-tailed Deer (*Odocoileus virginianus*) and Moose (*Alces alces*). The majority of the other species listed in the Atlas of the Mammals of Ontario as potentially occurring within the regional study

area are small and difficult to detect using standard, non-invasive methods; nonetheless, many of these species are expected to occur within the regional study area. A complete list of the mammal species identified through a review of secondary source information and recorded during field surveys is provided in Table 3-6.

Table 3-6: Compiled Mammal Species List

Common Name	Scientific Name	Observed on Site	Provincial S-Rank[1]	Provincial Designation (ESA)[2]	Federal Designation (SARA)[3]
Masked Shrew	*Sorex cinereus*	—	S5	—	—
Smoky Shrew	*Sorex fumeus*	—	S5	—	—
Pygmy Shrew	*Sorex hoyi*	—	S4	—	—
Water Shrew	*Sorex palustris*	—	S5	—	—
Northern Short-tailed Shrew	*Blarina brevicauda*	—	S5	—	—
Star-nosed Mole	*Condylura cristata*	—	S5	—	—
Little Brown Myotis	*Myotis lucifugus*	■	S4	END	—
Northern Myotis	*Myotis septentrionalis*	—	S3	END	—
Silver-haired Bat	*Lasionycteris noctivagans*	■	S4	—	—
Hoary Bat	*Lasiurus cinereus*	■	S4	—	—
Snowshoe Hare	*Lepus americanus*	■	S5	—	—
Eastern Red Bat	*Lasiurus borealis*	■	S4	—	—
Eastern Chipmunk	*Tamias striatus*	—	S5	—	—
Least Chipmunk	*Tamias minimus*	—	S5	—	—
Woodchuck	*Marmota monax*	—	S5	—	—
Red Squirrel	*Tamiasciurus hudsonicus*	■	S5	—	—
Northern Flying Squirrel	*Glaucomys sabrinus*	—	S5	—	—
Beaver	*Castor canadensis*	■	S5	—	—
Deer Mouse	*Peromyscus maniculatus*	—	S5	—	—
Southern Red-backed Vole	*Clethrionomys gapperi*	—	S5	—	—
Heath Vole	*Phenacomus intermedius*	—	None	—	—
Rock Vole	*Microtus chrotorrhinus*	—	S4	—	—
Meadow Vole	*Microtus pennsylvanicus*	—	S5	—	—
Muskrat	*Ondatra zibethicus*	—	S5	—	—
Southern Bog Lemming	*Synaptomys cooperi*	—	S4	—	—
House Mouse	*Mus musculus*	—	SE	—	—
Meadow Jumping Mouse	*Zapus hudsonicus*	—	S5	—	—
Woodland Jumping Mouse	*Napaeozapus insignis*	—	S5	—	—
Porcupine	*Erethizon dorsatum*	■	S5	—	—
Coyote	*Canis latrans*	—	S5	—	—
Grey Wolf	*Canis lupus*	■	S4	NAR	NAR
Red Fox	*Vulpes vulpes*	■	S5	—	—
Black Bear	*Ursus americanus*	■	S5	NAR	NAR
Raccoon	*Procyon lotor*	—	S5	—	—
American Marten	*Martes americana*	■	S5	—	—
Fisher	*Martes pennanti*	—	S5	—	—
Short-tailed Weasel	*Mustela erminea*	—	S5	—	—
Long-tailed Weasel	*Mustela frenata*	—	S4	—	—
American Mink	*Mustela vison*	■	S5	—	—
Striped Skunk	*Mephitis mephitis*	■	S5	—	—
River Otter	*Lutra canadensis*	■	S5	—	—

Common Name	Scientific Name	Observed on Site	Provincial S-Rank[1]	Provincial Designation (ESA)[2]	Federal Designation (SARA)[3]
Canada Lynx	*Lynx canadensis*	■	S5	NAR	—
Elk	*Cervus elaphus*	—	SNA	—	—
White-tailed Deer	*Odocoileus virginianus*	■	S5	—	—
Moose	*Alces alces*	■	S5	—	—

Notes:
■ – Specie meets\ criteria
[1] S-Rank - *S3*: Uncommon or vulnerable species; S4 - Apparently Secure Species; S5 – Secure Species
[2] SARO - Species at Risk in Ontario (listed under *Endangered Species Act*)
[3] SARA - *Species at Risk Act, 2003* – Schedule 1: Full protection under SARA.

Evidence of Moose was observed throughout the regional study area including 21 individual sightings during the winter aerial survey and one sighting during the spring aerial survey (see Table 3-7 and Figure 3-3). In May and June, moose were commonly observed incidentally along Highway 144 and Highway 560 and as well as at various other roadsides.

Table 3-7: Mammal and Mammal Track Observations During 2013 Aerial Surveys

Common Name	Sightings		Track Occurrences	
	Winter Survey	Spring Survey	Winter Survey	Spring Survey
Moose	21	1	99	18
White-tailed Deer	0	0	8	2
Wolf	0	0	6	9
Red Fox	1	0	141	53
Canada Lynx	0	0	15	12
River Otter	0	0	74	41
American Marten	0	0	10	4
Black Bear	0	1	0	4
Porcupine	0	0	2	0
American Mink	0	0	1	0
Weasel sp.	0	0	4	0
Mustelid	0	0	2	0

Winter moose sightings and tracks were typically associated with clearcuts and regenerating forests, particularly those dominated by poplar and abundant young saplings that provide a food source to moose. The majority (13) of winter moose sightings were observed along the Shiningtree TLA, eight were observed along the Cross-Country TLA and one was observed along the TL common to both proposed TLAs (see Figure 3-3). Moose tracks were also widespread, though more frequent along the Shiningtree TLA. Moose wintering areas were identified from existing Forest Management Plans for the Spanish, Pineland and Timiskaming Forests (MNR, 2010d; 2011a; b, respectively). Moose wintering areas were not mapped in the Romeo Malette and Abitibi River Forest Management Plans (MNR, 2009; 2010c, respectively) and so this information is missing from the northern extent of the regional study area.

Several small to very large clear-cut and young regeneration areas (post-clear-cut) were identified as potential Moose habitat along both TLAs during the two aerial surveys (see Figure 3-4); the regeneration areas typically consisted of young Jack Pine trees (1 to 1.5 m in height).

During the May and June ground surveys, Black Bears were commonly observed at roadsides near the regional study area and at points along the existing Shiningtree TLA. During the spring aerial survey, a Black Bear was seen sitting next to the entrance of a winter den which was located in an open coniferous forest with young deciduous saplings (see Figure 3-5 and Photo 10 in Appendix V). The sex of the bear was not confirmed and it cannot be determined whether the cubs were present. Nine clusters of bear "nests" were identified during aerial surveys and ranged from 1 to 15 "nests" per cluster (see Figure 3-5 and Photo 9 in Appendix V). These "nests" were most abundant along the Shiningtree TLA. In the springtime, when food is limited, Black Bears will climb trees (typically poplar trees) to feed on leaf buds or seeds. As the bear breaks the twigs and branches to reach these leaf buds, the twigs collect around the bear to form a loose "nest" structure where they are sitting. These "nests" are easily distinguished from raptor stick nests which have a tighter formation and are cup-shaped.

Wolf tracks were observed at low to medium (two to three sets of tracks) densities. During the winter aerial survey, all wolf tracks were restricted to the Shiningtree TLA, south of where it splits from the Cross-Country TLA; however, during the spring aerial surveys, observed tracks were equally distributed between both TLAs (see Figure 3-6). The aerial survey results for other mammals are presented in Figure 3-7.

No exposed bedrock containing suitable hibernacula features for bats was identified during ground surveys and karst geology is not present within the regional study area suggesting it is unlikely that natural bat hibernacula exists. Of the 11 mine sites suspected to contain features potentially suitable for bats, none qualified as candidate bat hibernacula. In general, shafts had clearly been completely or nearly completely filled in and most were flooded with water. Sites were grown over by vegetation, often masking rock piles. None of the mine remnants offered suitable wintering habitat for bats. A description of each site visited is provided in Table 3-8.

Table 3-8: Results of 2013 Survey of Abandoned Mines as Suitable Bat Hibernacula

AMIS	Feature Type (MNDM 2013)	Potential Candidate Hibernaculum	Site Description	Candidate Hibernaculum
00031	Open pit; shaft - 1 compartment - vertical shaft	Y	One pit with opening 2.1m x 2.5m x 1m deep, flooded, no crevices. One trench / rock face and some waste rock, covered in moss, no crevices.	N
00062	Trench; adit	Y	Private property, not accessible	N

AMIS	Feature Type (MNDM 2013)	Potential Candidate Hibernaculum	Site Description	Candidate Hibernaculum
00064	Open pit; winze; shaft - 1 compartment - vertical shaft	Y	One concrete pad 4.7 x 4.9 m. Site grown over with vegetation. No pits or holes. Two trenches 1.5 m deep, 2 m wide and 6-8 m long. Old rock piles or burms with no openings for hibernacula. Most waste rocks are small (≤ 20 x 10 x 5cm).	N
00069	Open pit; open pit	N	N/A	N
00085	Exploration shaft - vertical shaft	Y	Two shallow depressions in the ground that are 3 x 3 x 0.6 m deep. Site is grown over by the forest. One rock pile with openings that go 20 – 30 cm deep and entrances of openings are small.	N
00093	Shaft - 1 compartment - vertical shaft; portal or decline ramp; crown pillar; crown pillar; raise to surface; crown pillar	Y	Private property, not accessible	N
00104	Raise to surface; adit; shaft - 1 compartment - vertical shaft	Y	One hole / pit 2.6 x 3.2 x 0.6-0.8 m deep, flooded, no suitable crevices. Fence and flagging around the hole.	N
00131	Trench; shaft - 1 compartment - vertical shaft	Y	Six pits or depressions: 1) 4 x 6 x 1 m deep, 2) 15 x 7 x 1.5 m deep, 3) 3 x 6 x 0.5 m deep, 4) 8 x 2.5 x 0.8 m deep, 5) 7 x 3 x 0.5 m deep, 6) 7 x 6 x 0.6 m deep. All pits are flooded and have no crevices.	N
00149	Exploration shaft - vertical shaft; trench	Y	One pit 2.2 x 2.8 x 0.6 m deep, no cracks or crevices suitable for bats. No rock piles. One trench with no cracks or crevices. Some exposed rock but no openings. Site is grown over with vegetation.	N
00161	Open pit	N	N/A	N
00224	Trench; trench	N	N/A	N
00226	Trench; trench	N	N/A	N
00234	No data	Y	One rock pile emerging from the wetland, no suitable openings for bats. Evidence of drilling (sample cores) on the ground. No shaft present. One small cliff face near the rock pile but no cracks or crevices present.	N

AMIS	Feature Type (MNDM 2013)	Potential Candidate Hibernaculum	Site Description	Candidate Hibernaculum
00283	No data	Y	Could not be found	N
00340	No data	Y	Pit filled in with waste rock, no holes or depressions in the ground. A small rock pile but no suitable holes for bats (holes are too small).	N
00362	Open pit; trench	N	N/A	N
00368	No data	N	N/A	N
00435	Open pit	N	N/A	N
10067	Trench	N	N/A	N

Additionally, 16 potential maternity roost trees were identified (see Table 3-9) during surveys. As expected, a large proportion (7 out of 14; 50%) consisted of Trembling Aspen or at least a poplar species (14 out of 16 trees were identifiable to species). The density of potential maternity roosting trees at each array of sampling plots ranged from 0 to 6.7 trees/hectare with an average of 2.2 ± 1.9 trees/hectare. MNR (2011c) specifies 10 trees/hectare as the minimum roost tree density threshold for identifying potentially significant bat maternity roosting habitat. As the sampled areas within the Project had densities below 10 cavity trees/hectare and given that the Project area was extensively sampled, the Project area likely does not contain suitable maternity roosting habitat for bats, particularly for species of the genus *Myotis* and *Perimyotis*.

Table 3-9: Results of 2013 Bat Maternity Roost Habitat Suitability Assessment

Plot Array	Tree	Species	DBH (cm)	Height	Height of cavities (m)	Peeling Bark	State of Decay[1]	Potential Maternity Roost Tree Density
Bat 3a-e, Bat 4a-f	Bat 3c-1	Unknown	46.00	25	7 to 20	some	5, dead, top broken off	3.64
	Bat 3d-1	Poplar sp	69.00	25	4	None	2, Alive	
Bat 5a-f, Bat 6a-f	Bat 5c-1	Poplar sp.	54.00	18	13	None	2, Alive	3.33
	Bat 6f-1	Unknown	44.50	23	20	Some	3, dead, top broken off	
Bat 7a-f, Bat 8a-f	Bat 7c-1	Trembling Aspen	44.50	10	4 to 10	Some	Unknown	6.67
	Bat 7c-2	Trembling Aspen	49.00	10	6 to 9	None	Unknown	
	Bat 7c-3	White Cedar	60.00	14	1 to 6	None	Unknown	
	Bat 8c-1	White Birch	38.00	15	10 to 13	Some	5, dead, top broken off	
Bat 11a-f, Bat 12a-f	Bat 11f-1	Conifer sp.	27.00	18	NA	Extensive	3, dead	1.67
Bat 13a-f, Bat 14a-f	Bat 13d-1	Trembling Aspen	32.75	12	5 to 11	Some	Unknown	1,67
Bat 15a-f, Bat 16a-f	—	—	—	—	—	—	—	0
Bat 19a-f, Bat 20a-f	Bat 20a-1	Jack Pine	35.00	8	4 to 6	None	5, top broken off	3.33
	Bat 20c-1	White Cedar	56.00	16	>2	None	Unknown	
Bat 21a-f, Bat 22a-f	Bat 22b-1	Trembling Aspen	48.00	22	11	None	Unknown	1.67
Bat 25a-f, Bat 26a-f	—	—	—	—	—	—	—	0
Bat 27a-f, Bat 28a-f	—	—	—	—	—	—	—	0
Bat 29a-f, Bat 30a-f	Bat 30d-1	White Birch	36.50	20	5	Some	2 to 3	1.67
Bat 31a-f, Bat 32a-f	Bat 32b-1	Poplar sp.	54.00	18	>15	Little	3, dead	3.33
	Bat 32c-1	Maple sp.	>25.00	16	11	None	2, alive	

Source: Watt and Caceres, 1999

Acoustic surveys during spring and early summer confirmed the presence of the Little Brown Myotis within the local study area. This species was only recorded at sites near wetlands which included D1 (188.1 passes/night), D2 (1.1 passes/night), D3 (1.6 passes/night), and D5 (2.4 passes/night) (see Table 3-10 and Figure 2-4 for recording locations).

Table 3-10: Results from 2013 May - June Bat Acoustic Surveys

Species*	Survey Locations						
	D1 (Night 1)	D1 (Night 2)	D2	D3	D4	D5	D6
Little Brown Myotis	189.4	185.7	1.1	1.6	0	2.4	0
Northern Myotis	0	0	0	0	0	0	0
Eastern Small-Footed Myotis	0	0	0	0	0	0	0
Tricolored Bat	0	0	0	0	0	0	0
Silver-Haired Bat	72.1	0	4.1	11.3	0	2.1	0.3
Big Brown Bat	0	0	0	0	0	0	0
Hoary Bat	0	0	0.3	10.7	0	0.3	0
Eastern Red Bat	0	0	0.1	0	0	0	0
MYOTIS	271.8	100.0	4.7	2.0	0	3.0	0
LANO/EPFU	1439.1	57.1	4.3	94.9	0.3	4.0	1.0
LANO/LACI	0	0	0.1	6.3	0	0	0
MYLU/PESU	39.1	53.6	0.9	0.6	0	0	0
MYOTIS/PESU	8.2	0	0	0.4	0	0.3	0
MYLU/MYLE	45.3	0	0.3	0.4	0	3.3	0
MYOTIS/LABO	6.2	17.9	0.3	0	0	0.4	0
Unknown	30.9	35.7	0.6	4.4	0	0.6	0
Total Passes/Night	2,102.1	450.0	16.9	132.6	0.3	16.4	1.3
Total Passes Recorded	1,685	606	222	926	3	121	10
Passes Analyzed	1,021	126	118	928	2	115	9
Nights Recorded	1	0.5	7	7	7	7	7
Nights Analyzed	0.5	0.3	7	7	7	7	7

Notes: *Codes are derived from scientific names: MYLU = Little Brown Myotis, MYSE = Northern Myotis, MYLE = Eastern Smal-Footed Myotis, PESU = Tricolored Bat, LANO = Silver-Haired Bat, EPFU = Big Brown Bat, LACI = Hoary Bat, LABO = Eastern Red Bat. Results are reported as Passes/Night unless otherwise indicated in the left-most column.

Two other bat species were confirmed present within the Project Area during this period, the Silver-Haired Bat and the Hoary Bat. Hoary bats were only confirmed at D2 (1.1 passes/night), D3 (1.6 passes/night) and D5 (2.4 passes/night). Silver-Haired bats were confirmed at D1 (45.7 passes/night), D2 (4.1 passes/night), D3 (11.3 passes/night), D5 (2.1 passes/night) and D6 (0.3 passes/night; see Table 3-10 and Figure 2-4 for recording locations). Since no calls characteristic of the Big Brown Bat were recorded, the majority of calls classified as Silver-Haired Bat / Big Brown Bat were likely produced by Silver-Haired Bats. This group and the Silver-Haired Bat group made up 65% of recordings at D1 (979.5/1497.9 passes/night), 50% at D2 (8.4/16.9 passes/night), 80% at D3 (105.4/132.6 passes/night), 100% at D4 (0.3/0.3 passes/night), 37% at D5 (6.1/16.4 passes/night) and 100% at D6 (1.3/1.3 passes/night).

Acoustic surveys in late summer / fall revealed the presence of one additional species, the Eastern Red Bat (see Table 3-11). The Eastern Red Bat is a migratory species that is known to arrive to, and depart from its summering grounds later than other bat species, especially at more northern latitudes of its range (Barclay 1984). Therefore, it is likely that this species was not recorded during spring surveys because it was not yet present in the Project Area. A number of calls could not be confidently identified to a single species, meaning that five unconfirmed species could also be present within the Project area but to a much lesser degree: the Eastern Small-Footed Myotis, the Northern Myotis, the Tricolored Bat, and the Big Brown Bat.

Table 3-11: Results from 2013 August - September Bat Acoustic Surveys

Species*	Survey Location (see Fig. 2-4)		
	D1	D7	D8
Little Brown Myotis	0.3	0.4	0
Northern Myotis	0	0	0
Eastern Small-Footed Myotis	0	0	0
Tricolored Bat	0	0	0
Silver-Haired Bat	2.9	3.1	0.3
Big Brown Bat	0	0	0
Hoary Bat	0.5	1.1	0.5
Eastern Red Bat	0.1	0.1	0
MYOTIS	0.4	0.1	0
LANO/EPFU	1.3	2.9	2.3
LANO/LACI	0.3	0.2	0
MYLU/MYLE	0	0.2	0
PESU/LABO	1	0	0
Unknown	0.1	0.3	0.3
Total Passes/Night	6.9	8.4	3.4
Total Passes Recorded	69	84	34
Passes Analyzed	69	84	34
Nights Recorded	10	10	10
Nights Analyzed	10	10	10

Notes: *Codes are derived from scientific names: MYLU = Little Brown Myotis, MYSE = Northern Myotis, MYLE = Eastern Smal-Footed Myotis, PESU = Tricolored Bat, LANO = Silver-Haired Bat, EPFU = Big Brown Bat, LACI = Hoary Bat, LABO = Eastern Red Bat. Results are reported as Passes/Night unless otherwise indicated in the left-most column.

During the spring and early summer bat surveys, bat activity at D1 (1,498 passes/night) was at least 11.3 times greater than at any other survey site (see Table 3-10). Surveys lasted 1.5 nights at this location (compared to seven nights for all other bat detectors) because the elevated bat activity prematurely exhausted the equipment memory capacity. The activity level for the Little Brown Myotis and other *Myotis* species at D1 exceeded that recorded at D5 and D2 by approximately 50 and 70 times respectively and that at all other locations by greater than 100

times and was consistent between Nights 1 and 2. Although 65% of the recordings at D1 were from the Silver-Haired and Silver-Haired / Big Brown Bat groups, 98% of passes from these groups occurred on just Night 1. The difference in activity patterns between the two species groups may have reflected differences in how each group used the site. Silver-Haired Bats are latitudinal migrants and therefore Night 1 may have represented a migration event for this species. In contrast, a number of reasons could explain the consistently elevated activity level of the Little Brown Myotis at D1. Fall surveys tested four possible explanations: 1) D1 is near a hibernaculum; 2) D1 is near significant maternity roosting habitat; 3) D1 is near a favourable foraging site; and 4) bats commute/migrate along the linear wetland near D1. Bat activity in the fall dropped by 95% of what it was in spring / summer and the proportion of Myotis actvitiy dropped from 30% to 10%. Activity at D8 contained no Myotis, was 50% lower than at D1 and calls recorded were of constant frequency and fragmented suggesting they were produced by bats flying over the forest canopy. This is strong evidence that there is no hibernaculum in the area around D8 or D1. Activity levels at D1 and D7 were approximately equal (D1 = 6.9 passes/night, D7 = 8.4 passes/night) suggesting that activity may not be localised to D1. Finally, ground surveys found no suitable roosting habitat in the area. Therefore, it can be surmised that high activity levels during spring / early summer were most likely due to a high abundance of insects at the time of survey.

3.3.3 Amphibians and Reptiles

Five amphibian species were identified in the review of the MNR's Ontario Herpetofaunal Atlas (Oldham and Weller, 2000) as occurring within the vicinity of the regional study area. During field surveys, seven species of amphibians were documented including Green Frog (*Lithobates clamitans*), American Toad (*Anaxyrus americana*), Northern Leopard Frog (*Lithobates pipiens*), Spring Peeper (*Pseudacris crucifer*), Wood Frog (*Lithobates sylvanica*), Mink Frog (*Lithobates septemtrionalis*) and Four-toed Salamander (*Hemidactylium scutatum*; see Table 3-12). These species are generally associated with wetlands and vernal pools during the breeding season and aside from the Green Frog, are largely terrestrial outside the breeding season in the summer months. The most abundant amphibian detected was the Spring Peeper, which was ubiquitous throughout the regional study area and was recorded in great numbers along roadside ditches during crepuscular bird surveys. American Toad were also recorded regularly during crepuscular bird surveys.

Two reptile species were identified in the review of the MNR's Ontario Herpetofaunal Atlas (Oldham and Weller, 2000) as occurring within the vicinity of the regional study area; Eastern Gartersnake (*Thamnophis sirtalis*) and Midland Painted Turtle *(Chrysemys picta marginata*; see Table 3-12). Of these two species, only Eastern Gartersnake was observed during field surveys. One Snapping Turtle (*Chelydra serpentine*) was observed along Highway 144 near La Motte Lake Provincial Park. SAR are discussed further in Section 3.4.

Table 3-12: Compiled Amphibian and Reptile Species List

Common Name	Scientific Name	Observed on Site	Provincial S-Rank[1]	Provincial Designation (ESA)[2]	Federal Designation (SARA)[3]	Other Protective Acts[4]
AMPHIBIANS[5]						
Four-toed Salamander	*Hemidactylium scutatum*	■	S4	NAR	NAR	FWCA
American Toad	*Anaxyrus americanus*	■	S5	—	—	—
Spring Peeper	*Pseudacris crucifer*	■	S5	—	—	FWCA
Northern Green Frog	*Lithobates clamitans*	■	S5	—	—	—
Wood Frog	*Lithobates sylvatica*	■	S5	—	—	—
Northern Leopard Frog	*Lithobates pipiens*	■	S5	NAR	NAR	—
Mink Frog	*Lithobates septentrionalis*	■	S5	—	—	—
REPTILES[5]						
Snapping Turtle	*Chelydra serpentina*	■	S5	SC	SC	FWCA
Midland Painted Turtle	*Chrysemys picta marginata*	—	S5	—	—	FWCA
Eastern Gartersnake	*Thamnophis sirtalis*	■	S5	—	—	—

Notes:
■ – Specie meets criteria
[1] S-Rank - S5 – Secure Species
[2] ESA - *Endangered Species Act, 2007*
[3] SARA - *Species at Risk Act, 2003* – Schedule 1
[4] FWCA – *Fish and Wildlife Conservation Act*
[5] Records from the NHIC Ontario Herpetofaunal Summary Atlas.

3.3.4 Invertebrates

Invertebrates (arthropods) comprise a large and complicated group of species which can be difficult to identify without capturing individuals. As such, secondary source information for invertebrates is generally non-existent for northern Ontario, except for butterflies and odonates (dragonflies and damselflies). A review of existing data in the Ontario Butterfly Atlas (Toronto Entomologists Society, 2012) revealed records for only one atlas square (17MP76) overlapping the regional study area. Records of only five species were available for this study square. The regional study area occurs within three Ontario counties: Cochrane, Timiskaming and Sudbury. A total of 96 butterfly species are known to occur within these counties (Toronto Entomologists Society, 2012; see Table 3-13). Based on a review of the Ontario Odonata Atlas (Ontario Odonata Atlas, 2005), 32 species of Odonates are known to occur within the vicinity of the regional study area (see Table 3-13).

Surveys for invertebrate species were conducted concurrently with vegetation and wildlife surveys; however, identification of invertebrate species was restricted to Lepidoptera (butterflies) and Odonata (dragonflies and damselflies) which could be readily identified without capture. Five species of Odonata and five species of Lepidoptera were observed during field surveys in the local study area (see Table 3-13). These species are relatively common in northern Ontario and are not listed as SAR.

Table 3-13: Compiled Invertebrate Species List

Common Name	Scientific Name	Observed on Site	Provincial S-Rank[1]	Provincial Designation (ESA)[2]	Federal Designation (SARA)[3]	Other Protective Acts
ODONATES[4]						
River Jewelwing	*Calopteryx aequabilis*	—	S5	—	—	—
Ebony Jewelwing	*Calopteryx maculata*	—	S5	—	—	—
Common Speadwing	*Lestes disjunctus*	—	S5	—	—	—
Sweetflag Spreadwing	*Lestes forcipatus*	—	S4	—	—	—
Taiga Bluet	*Coenagrion resolutum*	—	S5	—	—	—
Boreal Bluet	*Enallagma boreale*	—	S5	—	—	—
Tule Bluet	*Enallagma carunculatum*	—	S5	—	—	—
Marsh Bluet	*Enallagma ebrium*	—	S5	—	—	—
Eastern Forktail	*Ischnura verticalis*	—	S5	—	—	—
Canada Darner	*Aeshna canadensis*	—	S5	—	—	—
Lake Darner	*Aeshna eremita*	—	S5	—	—	—
Zigzag Darner	*Aeshna sitchensis*	—	S4	—	—	—
Shadow Darner	*Aeshna umbrosa*	—	S5	—	—	—
Springtime Darner	*Basiaeschna janata*	—	S5	—	—	—
Moustached Clubtail	*Gomphus adelphus*	—	S3	—	—	—
Lancet Clubtail	*Gomphus exilis*	—	S5	—	—	—
Ashy Clubtail	*Gomphus lividus*	—	S4	—	—	—
Clubtail sp	*Gomphus sp*	■	—	—	—	—
Boreal Snaketail	*Ophiogomphus colubrinus*	—	S3	—	—	—
Rusty Snaketail	*Ophiogomphus rupinsulensis*	—	S4	—	—	—
Twin-spotted Spiketail	*Cordulegaster maculata*	—	S4	—	—	—
Swift River Crusier	*Macromia illinoiensis*	—	S5	—	—	—
American Emerald	*Cordulia shurtleffi*	—	S5	—	—	—
Beaverpond Baskettail	*Epitheca canis*	—	S5	—	—	—
Spiny Baskettail	*Epitheca spinigera*	—	S3	—	—	—
Baskettail Sp	*Epitheca sp*	■	—	—	—	—
Kennedy's Emerald	*Somatochlora kennedyi*	—	S5	—	—	—
Chalk-fronted Corporal	*Ladona julia*	■	S5	—	—	—
Frosted Whiteface	*Leucorrhinia frigida*	—	S4	—	—	—
Crimson-ringed Whiteface	*Leucorrhinia glacialis*	—	S5	—	—	—
Red-waisted Whiteface	*Leucorrhinia proxima*	—	S5	—	—	—
Four-spotted Skimmer	*Libellula quadrimaculata*	■	S4	—	—	—
Black Meadowhawk	*Sympetrum danae*	—	S5	—	—	—
White-faced Meadowhawk	*Sympetrum obtrusum*	—	S5	—	—	—

Common Name	Scientific Name	Observed on Site	Provincial S-Rank[1]	Provincial Designation (ESA)[2]	Federal Designation (SARA)[3]	Other Protective Acts
LEPIDOPTERANS[5]						
Southern Cloudy Wing	*Thorybes bathyllus*	—	S3	—	—	—
Northern Cloudy Wing	*Thorybes pylades*	—	S5	—	—	—
Dreamy Dusky Wing	*Erynnis icelus*	—	S5	—	—	—
Juvenal's Dusky Wing	*Erynnis juvenalis*	—	S5	—	—	—
Columbine Dusky Wing	*Erynnis lucilius*	—	S4	—	—	—
Eastern Persius Dusky Wing	*Erynnis persius*	—	SX	EXP	END	—
Grizzled Skipper	*Pyrgus centaureae*	—	S4	—	—	—
Arctic Skipper	*Carterocephalus palaemon*	—	S5	—	—	—
Least Skipper	*Ancyloxypha numitor*	—	S5	—	—	—
European Skipper	*Thymelicus lineola*	—	SE	—	—	—
Common Branded Skipper	*Hesperia comma*	—	S4S5	—	—	—
Leonard's Skipper	*Hesperia leonardus*	—	S4	—	—	—
Indian Skipper	*Hesperia sassacus*	—	S4	—	—	—
Peck's Skipper	*Polites peckius*	—	S5	—	—	—
Tawny-edged Skipper	*Polites themistocles*	—	S5	—	—	—
Crossline Skipper	*Polites origenes*	—	S4	—	—	—
Long Dash Skipper	*Polites mystic*	—	S5	—	—	—
Northern Broken-Dash	*Wallengrenia egermet*	—	S5	—	—	—
Hobomok Skipper	*Poanes hobomok*	—	S5	—	—	—
Two-spotted Skipper	*Euphyes bimacula*	—	S4	—	—	—
Dun Skipper	*Euphyes vestris*	—	S5	—	—	—
Pepper and Salt Skipper	*Amblyscirtes hegon*	—	S4	—	—	—
Common Roadside Skipper	*Amblyscirtes vialis*	—	S4	—	—	—
Old World Swallowtail	*Papilio machaon*	—	S2S3	—	—	FWCA
Canadian Tiger Swallowtail	*Papilio canadensis*	■	S5	—	—	FWCA
Checkered White	*Pontia protodice*	—	SNA	—	—	—
Western White	*Pontia occidentalis*	—	S3	—	—	—
Mustard White	*Pieris oleracea*	—	S4	—	—	—
Cabbage White	*Pieris rapae*	—	SNA	—	—	—
Large Marble	*Euchloe ausonides*	—	S3	—	—	—
Olympia Marblewing	*Euchloe olympia*	—	S4	—	—	—
Clouded Sulphur	*Colias philodice*	—	S5	—	—	—
Orange Sulphur	*Colias eurytheme*	—	S5	—	—	—
Pelidne Sulphur	*Colias pedlidne*	—	S4	—	—	—
Pink-edged Sulphur	*Colias interior*	—	S5	—	—	—
Little Yellow	*Pyrisitia lisa*	—	SNA	—	—	—
Harvester	*Feniseca tarquinius*	—	S4	—	—	—

Common Name	Scientific Name	Observed on Site	Provincial S-Rank[1]	Provincial Designation (ESA)[2]	Federal Designation (SARA)[3]	Other Protective Acts
American Copper	*Lycaena phlaeas*	—	S4	—	—	—
Bronze Copper	*Lycaena hyllus*	—	S5	—	—	—
Bog Copper	*Epidemia epixanthe*	—	S4S5	—	—	—
Dorcus Copper	*Lycaena dorcas*	—	S4	—	—	—
Purplish Copper	*Lycaena helloides*	—	S3	—	—	—
Coral Hairstreak	*Harkenclenus titus*	—	S4	—	—	—
Acadian Hairstreak	*Satyrium acadicum*	—	S4	—	—	—
Banded Hairstreak	*Satyrium calanus*	—	S4	—	—	—
Striped Hairstreak	*Satyrium liparops*	—	S5	—	—	—
Gray Hairstreak	Strymon melinus	—	S4	—	—	—
Brown Elfin	*Callophrys augustinus*	—	S5	—	—	—
Hoary Elfin	*Callophrys polios*	—	S4	—	—	—
Eastern Pine Elfin	*Callophrys niphon*	■	S5	—	—	—
Western Pine Elfin	*Callophrys niphon*	—	S4	—	—	—
Eastern Tailed Blue	*Everes comyntas*	—	S5	—	—	—
Western Tailed Blue	*Everes amyntula*	—	S4	—	—	—
Spring Azure	*Celastrina ladon*	■	S5	—	—	—
Summer Azure	*Celastrina neglecta*	—	S5	—	—	—
Cherry Gall Azure	*Celastrina serotina*	—	SU	—	—	—
Silvery Blue	*Glaucopsyche lygdamus*	—	S5	—	—	—
Greenish Blue	*Plebejus saepiolus*	—	S4	—	—	—
Northern Blue	*Plebejus idas*	—	S4	—	—	—
Variegated Fritillary	*Euptoieta claudia*	—	SNA	—	—	—
Great Spangled Fritillary	*Speyeria cybele*	—	S5	—	—	—
Aphrodite Fritillary	*Speyeria aphrodite*	—	S5	—	—	—
Atlantis Fritillary	*Speyeria atlantis*	—	S5	—	—	—
Bog Fritillary	*Boloria chariclea*	—	S5	—	—	—
Silver-bordered Fritillary	*Boloria selene*	—	S5	—	—	—
Meadow Fritillary	*Boloria bellona*	—	S5	—	—	—
Frigga Fritillary	*Boloria frigga*	—	S5	—	—	—
Freija Fritillary	*Boloria freija*	—	S4	—	—	—
Arctic Fritillary	*Boloria chariclea*	—	S5	—	—	—
Silvery Checkerspot	*Chlosyne nycteis*	—	S5	—	—	—
Harris' Checkerspot	*Chlosyne harrisii*	—	S4	—	—	—
Tawny Crescent	*Phyciodes batesii*	—	S4	—	—	—
Northern Crescent	*Phycoides pascoensis*	—	S5	—	—	—
Question Mark	*Polygonia interrogationis*	—	S5	—	—	—
Eastern Comma	*Polygonia comma*	■	S5	—	—	—

Common Name	Scientific Name	Observed on Site	Provincial S-Rank[1]	Provincial Designation (ESA)[2]	Federal Designation (SARA)[3]	Other Protective Acts
Satyr Comma	*Polygonia satyrus*	—	S4	—	—	—
Green Comma	*Polygonia faunus*	—	S4	—	—	—
Hoary Comma	*Polygonia gracilis*	—	S4	—	—	—
Grey Comma	*Polygonia progne*	—	S5	—	—	—
Compton Tortoiseshell	*Nymphalis vaualbum*	—	S5	—	—	—
Mourning Cloak	*Nymphalis antiopa*	■	S5	—	—	—
Milbert's Tortoiseshell	*Nymphalis milberti*	—	S5	—	—	—
American Lady	*Vanessa virginiensis*	—	S5	—	—	—
Painted Lady	*Vanessa cardui*	—	S5	—	—	—
Red Admiral	*Vanessa atalanta*	—	S5	—	—	—
White Admiral	*Limenitis arthemis*	—	S5	—	—	—
Viceroy	*Limenitis archippus*	—	S5	—	—	—
Northern Pearly Eye	*Enodia anthedon*	—	S4	—	—	—
Eyed Brown	*Satyrodes eurydice*	—	S5	—	—	—
Little Wood-Satyr	*Megisto cymela*	—	S5	—	—	—
Common Ringlet	*Coenonympha tullia*	—	S5	—	—	—
Common Wood-Nymph	*Cercyonis pegala*	—	S5	—	—	—
Red-disked Alpine	*Erebia discoidalis*	—	S3	—	—	—
Chryxus Arctic	*Oeneis chryxus*	—	S4	—	—	—
Jutta Arctic	*Oeneis jutta*	—	S4	—	—	—
Monarch	*Danaus plexippus*	—	S2N, S4B	—	SC	FWCA

Notes:
■ – Specie meets criteria
[1] S-Rank – S2: Imperiled; *S3* – Uncommon or vulnerable species; S4 - Apparently Secure Species; S5 – Secure Species; SX – Presumed Extirpated; SNA – Non-native; SU – Status Uncertain
[2] ESA - *Endangered Species Act, 2007*
[3] SARA - *Species at Risk Act, 2003* – Schedule 1
[4] Records from the NHIC Ontario Odonata Atlas
[5] Records from the Ontario Butterfly Atlas.

3.4 Species at Risk and Provincially Rare Species

Based on a review of secondary source information, consultation with the MNR and baseline field studies, 12 SAR were identified as occurring or potentially occurring within the vicinity of the local study area, including nine bird species, two mammal species and one reptile species (see Table 3-14). The 2013 field surveys recorded seven SAR within the local study area (Little Brown Myotis, Bald Eagle, Canada Warbler, Common Nighthawk, Rusty Blackbird, Olive-sided Flycatcher and Snapping Turtle; see Table 3-14). Detailed habitat descriptions and documented occurrences of SAR within the local study area are provided in the subsections below (except fish SAR which are beyond the scope of this report). Consultations with the MNR are provided in Appendix VII.

Additionally, 10 provincially rare species were identified in the secondary source review as potentially occurring in the vicinity of the local study area: Moustached Clubtail (*Gomphus adelphus*), Boreal Snaketail (*Ophiogomphus colubrinus*), Rusty Snaketail (*Ophiogomphus rupinsulensis*), Kennedy's Emerald (*Somatochlora kennedyi*), Southern Cloudy Wing (*Thorybes bathyllus*), Old World Swallowtail (*Papilio machaon*), Western White (*Pontia occidentalis),* Large Marble (*Euchloe ausonides),* Purplish Copper (*Lycaena helloides*) and Red-disked Alpine (*Erebia discoidalis*). However, no provincially rare species were recorded within the local study area (see Table 3-14).

3.4.1 Confirmed Avian Species at Risk

Based on the results of the existing information review and 2013 field surveys, nine avian species are known to occur within the vicinity of the local study area including Bald Eagle, Barn Swallow, Black Tern, Canada Warbler, Chimney Swift, Common Nighthawk, Eastern Whip-poor-will, Olive-sided Flycatcher and Rusty Blackbird. Five of these species, Bald Eagle, Rusty Blackbird, Common Nighthawk, Canada Warbler and Olive-sided Flycatcher were confirmed within the Project Study area during the spring and summer 2013 surveys. The remaining species, Eastern Whip-poor-will, Chimney Swift, Black Tern and Barn Swallow were not observed during the surveys; these species may occur on the site and were undetected or use the site intermittently making detection very difficult.

Table 3-14: Species at Risk and Provincially Rare Species in the Local Study Area

Common Name	Scientific Name	Source[1]	Observed on Site	Provincial S-Rank[2]	Provincial Designation (ESA)[3]	Federal Designation (SARA)[4]	Other Protective Acts[5]
BIRDS							
Bald Eagle	*Haliaeetus leucocephalus*	NHIC	■	S4	SC	—	FWCA
Barn Swallow	*Hirundo rustica*	eBird.org	—	S4B	THR	—	MBCA
Black Tern	*Childonias niger*	NHIC, OBBA	—	S3B	SC	—	MBCA
Canada Warbler	*Cardellina canadensis*	MNR, OBBA	■	S4	SC	THR	MBCA
Chimney Swift	*Chaetura pelagic*	OBBA	—	S4B, S4N	THR	THR	MBCA
Common Nighthawk	*Chordeiles minor*	OBBA	—	S4B	SC	THR	MNCA
Eastern Whip-poor-will	*Antrostomus vociferous*	MNR, eBird.org	—	S4B	THR	THR	MBCA
Olive-sided Flycatcher	*Contopus cooperi*	ABBO	■	S4B	SC	THR	MBCA
Rusty Blackbird	*Euphagus carolinus*	ABBO	■	S4B	—	SC	MBCA
MAMMALS							
Little Brown Myotis	*Myotis lucifuga*	AMO	■	S4	END	**	FWCA
Northern Myotis	*Myotis septentrionalis*	AMO	—	S3	END	**	FWCA
REPTILES							
Snapping Turtle	*Chelydra serpentina*	AMEC	■	—	SC	SC	FWCA
INVERTEBRATES							
Moustached Clubtail	*Gomphus adelphus*	OOA	—	S3	—	—	—
Boreal Snaketail	*Ophiogomphus colubrinus*	OOA	—	S3	—	—	—
Rusty Snaketail	*Ophiogomphus rupinsulensis*		—	S3	—	—	—
Kennedy's Emerald	*Somatochlora kennedyi*	OOA	—	S3	—	—	—
Southern Cloudy Wing	*Thorybes bathyllus*	OBA	—	S3	—	—	—
Eastern Persius Dusky Wing	*Erynnis persius*	OBA	—	SX	EXP	END	—
Old World Swallowtail	*Papilio machaon*	OBA	—	S2S3	—	—	FWCA
Western White	*Pontia occidentalis*	OBA	—	S3	—	—	—
Large Marble	*Euchloe ausonides*	OBA	—	S3	—	—	—
Purplish Copper	*Lycaena helloides*	OBA	—	S3	—	—	—
Red-disked Alpine	*Erebia discoidalis*	OBA	—	S3	—	—	—
Monarch	*Danaus plexippus*	OBA	—	S2N, S4B	—	SC	FWCA

Notes:
■ – Specie meets criteria
[1] Source: NHIC – Natural Heritage Information Centre Biodiversity Explorer; MNR – Consultation with Ministry of Natural Resources; OBBA – Atlas of Breeding Birds of Ontario (Cadman *et al.*, 2007); AMO – Altas of Mammals of Ontario (Dobbyn, 1994); OOA – Ontario Odonata Atlas; OBA – Ontario Butterfly Atlas (Toronto Entomologists Society, 2012).
[2] S-Rank – S2: Imperiled; *S3* – Uncommon or vulnerable species; S4 - Apparently Secure Species; S5 – Secure Species; SX – Presumed Extirpated.
[3] ESA - *Endangered Species Act, 2007*
[4] SARA - *Species at Risk Act, 2003* – Schedule 1
[5] MBCA – *Migratory Birds Conventions Act*; FWCA – *Fish and Wildlife Conservation Act*
** No current federal designation. Emergency assessment by COSEWIC recommended this species be listed as *Endangered* on Schedule 1 of SARA.

3.4.1.1 Bald Eagle

Bald Eagles use shoreline habitat associated with large lakes and large rivers for nesting and foraging (MNR, 2000). As Bald Eagles are predominantly fish-eating birds, productive areas of open water or deep-water marshes supporting large quantities of fish are required to feed growing young (MNR, 2000). Nests are usually built in large trees near shore or over water and are often reused, becoming extremely large as new nest material is added each year (MNR, 2000). The Bald Eagle shows a distinct preference for islands with no particular preference for mixed, coniferous, or deciduous forest for nesting purposes (MNR, 2000). Large trees greater than 60 cm dbh with crotches large enough to support the huge nest is essential. Bald Eagles winter along shorelines of large water bodies that provide areas of open water, with abundant and accessible fish (MNR, 2000). Bald Eagles roost in large trees growing in shoreline forest stands or on cliffs (MNR, 2000). The location of winter roosting sites changes within and among winters depending upon ice conditions and fish distribution, but the same general areas are used traditionally and often the same trees will be used year after year (MNR, 2000).

One active Bald Eagle nest was recorded during the spring aerial survey. The nest was located between Upper Three Duck Lake and Côté Lake near the southern end of the Cross-Country alignment (see Figure 3-2). Suitable nesting habitat for Bald Eagles occurred along portions of the local study area where numerous tall Red Pines were present in proximity to lakes. Such habitats were present along the southern half of the Cross-Country alignment and sporadically along the Shining Tree alignment.

3.4.1.2 Rusty Blackbird

The breeding range of the Rusty Blackbird corresponds closely to the boreal forest and taiga terrestrial ecozones and is generally characterized by conifer forest wetlands (COSEWIC, 2006). The Rusty Blackbird occurs primarily in wetlands associated with recent burns, wooded heathland and peat bogs with or without ponds, as well as in riparian scrub, alder and willow thickets, open moss and lichen-spruce woodlands and areas dominated by conifer forest edges, lakes and bogs (COSEWIC, 2006). The Rusty Blackbird also occurs in sedge meadows, marshes, muskegs, swamps and estuaries, as is considered loosely colonial. In forested areas, the Rusty Blackbird is strictly riparian and rarely uses the forest interior (COSEWIC, 2006).

No Rusty Blackbirds were identified within the local study area during breeding bird surveys, though one was recorded incidentally during other survey work. Based on vegetation surveys and observations made during breeding bird surveys, Rusty Blackbird breeding habitat is present in the many forested wetlands, swamps, bogs, muskeg and riparian areas within the local study area.

3.4.1.3 Common Nighthawk

The Common Nighthawk breeds in a wide range of open habitats, such as sand dunes, beaches, recently logged or burned-over areas, forest clearings, short-grass prairies, pastures,

open forests, peat bogs, marshes, lakeshores, gravel roads, river banks, rocky outcrops or barrens, railways, mine tailings, quarries, mines and urban parks (COSEWIC, 2007a). Although urban habitat is used by nighthawks, they generally prefer natural sites (COSEWIC, 2007a). Nests are located on the ground usually in the open, but near logs, boulders, grass clumps, shrubs or small patches of sandy gravel surrounded by scattered debris. The Common Nighthawk is highly territorial, with males seldom crossing territorial boundaries. In natural environments, territory size is estimated at approximately 28 ha (Wedgewood, 1973).

During crepuscular bird surveys, a single Common Nighthawk was identified at survey Station 67 (see Figure 2-3). The local study area is largely vegetated with birch, aspen and spruce forest communities with heavy ground cover dominated by Mountain Maple and Beaked Hazel. Aerial surveys confirmed that little open habitat is present that may provide suitable Common Nighthawk nesting habitat. The existing Shining Tree TLA provides an open corridor that is regularly maintained to prevent excessive woody growth. This corridor has an access trail along its length which is regularly used for recreational activities by local cottagers and also supports the frequent movement of large animals. Clearcuts lands are present in the local study area, though upon inspection these areas tended to be freshly cleared or were densely colonized by regenerating woody plants. Neither of these scenarios is particularly attractive to nesting Common Nighthawks. As such, critical habitat for Common Nighthawks is considered highly limited within the local study area.

3.4.1.4 Canada Warbler

The Canada Warbler is found in a variety of forest types, but it is most abundant in wet, mixed deciduous-coniferous forests with a well-developed shrub layer (COSEWIC, 2008a). Nests are typically located on or near the ground on mossy logs or roots, along stream banks or on hummocks. Canada Warblers are also less commonly found in riparian shrub forests on slopes and ravines, old-growth forests with canopy openings and a high density of shrubs and in stands regenerating after disturbances, such as forest fires or logging (COSEWIC, 2008a).

Ten Canada Warblers were identified at 10 point count stations (Stations 25, 144, 156, 157, 158, 160 and 163; see Figure 2-3). The sightings were recorded in upland habitats adjacent to, or within 100 m of, wetland habitats characteristic of Canada Warbler nesting habitats. The presence of multiple singing male Canada Warblers and suitable breeding habitat strongly suggests that this species is breeding within the local study area.

3.4.1.5 Olive-sided Flycatcher

The Olive-sided Flycatcher is most often associated with open areas containing tall trees or snags for perching (COSEWIC, 2007b). Open areas may be forest openings, forest edges near natural openings (such as rivers, muskeg, bogs or swamps), burned forest or open to semi-open mature forest stands, or human-made openings (such as logged areas; COSEWIC, 2007b). Generally, forest habitat is either coniferous or mixed coniferous and in boreal forests,

suitable habitat is more likely to occur in or near wetland areas (COSEWIC, 2007b). Olive-sided Flycatchers do not sing frequently, but can be heard from several hundred metres away given their choice of open habitats.

During breeding bird surveys, two Olive-sided Flycatchers were identified within the local study area. One of these observations occurred during breeding bird point count surveys at Station 80 (see Figure 2-3) and both observations were made at clearcuts.

3.4.2 Unconfirmed Avian Species at Risk

3.4.2.1 Barn Swallow

Before European settlement in Ontario, Barn Swallows nested mostly in caves, holes, crevices and ledges in cliff faces (COSEWIC, 2011). Although Barn Swallows continue to nest in traditional natural habitats, they are now most closely associated with human structures in rural areas. Such nesting sites include a variety of artificial structures that provide either a horizontal nesting surface (e.g., a ledge) or a vertical face, often with some sort of overhang that provides shelter (COSWEIC, 2011). Nests are most commonly located in and around open barns, garages, sheds, boat houses, bridges and road culverts and are situated on such surfaces as beams and posts, light fixtures and ledges over windows and doors (COSEWIC, 2011). Because Barn Swallow nests are constructed of mud pellets, they require nest sites that have a source of nearby mud, which makes bridges and large culverts ideal sites for nesting (COSEWIC, 2011). Barn Swallows typically select foraging sites close to open habitats such as farmlands of various descriptions, wetlands, road rights-of-way and large forest clearings (COSEWIC, 2011).

During the 2013 breeding bird surveys, no Barn Swallows were identified in the local study area. Anthropogenic structures such as old barns, sheds and bridges are largely absent in investigated areas. Small cliffs which may provide suitable natural nesting habitat are scattered along lake shores within or near to the local study area. It is not expected that Barn Swallows, or habitats for Barn Swallows, are present along the two proposed transmission line options.

3.4.2.2 Black Tern

The Black Tern is a small tern that nests semi-colonially in freshwater marshes amidst emergent vegetation in biologically rich fresh-water wetlands, including prairie sloughs, margins of lakes and occasionally river or island edges (Heath *et al.*, 2009). Habitat suitability appears to be determined more by landscape structure at a larger scale (wetland complex) than local vegetation conditions within wetlands (Heath *et al.*, 2009). Black Terns selectively choose wetlands located in high-density wetland landscapes within areas where less than 50% of upland habitat is tilled. Black Terns are less likely to occur in wetlands surrounded by woody vegetation. Black Terns generally prefer marshes or marsh complexes of more than 20 ha in size for breeding; the smallest reported breeding habitat is 5.3 ha (Heath *et al.*, 2009). The historical record of this species was located in close proximity to the City of Timmins.

During the 2013 breeding bird surveys, marsh monitoring surveys, spring helicopter flights over marshy lake edges, and vegetation surveys, no individual Black Terns or evidence of nesting colonies were observed within the local study area. Based on the habitat preferences of Black Terns, no suitable nesting habitat (large mash wetlands or wetland complexes) is present within the local study area.

3.4.2.3 Chimney Swift

As the Chimney Swift spends most of the day foraging for insects on the wing, associating this species with a single type of habitat is difficult, but its presence in any given area is largely dependent upon the availability of suitable nesting sites and the abundance of insects (COSEWIC, 2007c). Before the arrival of European settlers, the Chimney Swift was associated with old growth forests where they nested and roosted in large hollow trees (greater than 50 cm dbh; COSEWIC, 2007c). As the availability of hollow trees declined with settlement and logging activities, the swifts adapted to nesting in chimneys. As a result, the aptly named Chimney Swift is now primarily associated with urban and rural areas where chimney structures are available for nesting and roosting (COSEWIC, 2007c). In addition to chimneys, Chimney Swifts have been documented to nest and roost in air shafts, silos, wells, barns and abandoned buildings (COSEWIC, 2007c). Nesting sites are difficult to locate due to the secretive behaviour of the swifts as they approach the nest, though roosts are easier to identify due to the larger number of birds involved (COSEWIC, 2007c). Swifts are often commonly associated with bodies of water due to the higher abundance of insects, especially wetlands (COSEWIC, 2007c). Studies indicate that most roosting sites are located within 1 km of a body of water (COSEWIC, 2007c).

During the breeding bird surveys and vegetation surveys, no individual Chimney Swifts or evidence of nesting colonies were observed within the local study area. Old growth forests were absent from the local study area as were large hollow trees which provide natural nesting and roosting habitat. Given the scarcity of towns in the local study area, old chimneys were also absent. As such, it is likely no habitats for Chimney Swifts are present where Project activities are proposed.

3.4.2.4 Eastern Whip-poor-will

The Eastern Whip-poor-will (recently separated from the Western Whip-poor-will *arizonae* group on the basis of differences in genetics, vocalizations, morphology and egg pigmentation) is a secretive and illusive bird. The Whip-poor-will, an obligate forest breeding bird, is dependent on open, dry deciduous or mixed forests with little or no underbrush forest (Cink, 2002). Shade proximity to open areas for foraging and fairly sparse ground cover are key elements of habitat chosen. The degree of openness in forest understory appears to be more important than forest composition for nesting habitat; however, this species avoids both wide-open spaces and closed-canopy forests for nesting purposes (COSEWIC, 2009). Open habitats such as open wetlands with perches, regenerating forest edges and shrubby pastures are used for foraging (COSEWIC, 2009). Common nesting habitat choices include rock or sand barrens with scattered trees, savannahs, old burns or other disturbed sites in a state of early to mid-forest

succession, or open conifer plantations (COSEWIC, 2009). Accordingly, pine (barrens and plantations), oak (barrens and savannahs), aspen and birch (early to mid-succession) are common tree species associations (COSEWIC, 2009). Other necessary habitat elements are thought to involve ground-level vegetation (little cover is preferred), abundant leaf litter and woodland size, although no data indicating minimum woodland size in available (COSEWIC, 2009).

During crepuscular bird surveys (see Figure 2-3), no Eastern Whip-poor-wills were identified within the local study area. Based on vegetation surveys, available habitat for the species is limited within the local study area. Open habitats preferred by Eastern Whip-poor-wills are sparse as much of the forest structure is dominated by birch, aspen and spruce forests with Mountain Maple and Beaked Hazel understories. As such, habitats for Eastern Whip-poor-wills are considered absent where Project activities are proposed.

3.4.3 Confirmed Mammal Species at Risk

Two mammalian SAR were identified as potentially occurring in the vicinity of the local study area: Little Brown Myotis and Northern Myotis. Acoustic activity surveys confirmed the presence of the Little Brown Myotis at certain locations within the local study area. A number of echolocation recordings resembled those of the Northern Myotis but did not contain the discriminant features necessary for classification to a single species; the Northern Myotis may therefore still occur in the vicinity of the local study area but its presence was not confirmed.

3.4.3.1 Little Brown Myotis

The Little Brown Myotis is a habitat generalist, preferring to forage in areas along waterways, clearings and forest edges (Jung *et al.*, 1999). During early summer, females of the species form large maternity colonies of tens to hundreds of individuals. Natural maternity colonies are generally formed in old growth forest stands (>80 years) and roost trees are generally tall snags in early levels of decay with many cavities and peeling bark. In early fall, Little Brown Myotis travel to caves and mines which serve as hibernacula during the winter. Mating occurs in the fall at the entrance hibernacula in so called ‘mating swarms’. Both maternity roosts and hibernacula are considered significant wildlife habitat (MNR, 2011c) because they are areas where large numbers of bats congregate. This clustering behaviour makes bats more vulnerable to potential population declines. For example, the recent arrival of White Nose Syndrome (WNS) in North America has resulted in the extermination of millions of bats, largely because bats are impacted by WNS during hibernation.

No candidate bat hibernacula or potential bat maternity roosting habitat was identified within or in the vicinity of the local study area. The density of candidate maternity roosting trees during habitat surveys ranged from 0 to 6.7 trees/hectare with an average 2.2 ± 1.9 trees/hectare. This is below the 10 trees/hectare minimum threshold specified by the MNR (MNR, 2011c) for identifying candidate bat maternity roosting habitat. Therefore, the local study area likely does

not contain significant maternity roosting habitat. Despite this, acoustic surveys confirmed use of the local study area by the Little Brown Myotis. This species was only recorded at sites near wetlands and notably high levels of activity were recorded at D1 during parts of the year, likely due to good foraging conditions at this site (D1 = 188.1 passes/night, D2 = 1.1 passes/night, D3 = 1.6 passes/night, D5 = 2.4 passes/night; see Figure 2-4, Table 3-10 and Appendices VI and VII).

3.4.4 Unconfirmed Mammal Species at Risk

3.4.4.1 Northern Myotis

The life cycle of the Northern Myotis is similar to that of the Little Brown Myotis although this species forms smaller colonies and is more adapted to foraging within the forest interior (Jung *et al.*, 1999; Patriquin and Barclay, 2003).

As described above, no natural potential bat hibernacula or potential bat maternity roosting habitat was identified within or in the vicinity of the Project Area. Calls that may have belonged to Northern Myotis were recorded at the same locations where Little Brown Myotis was recorded (D1 = 239.0 passes/night, D2 = 5.0 passes/night, D3 = 2.4 passes/night, D5 = 6.4 passes/night; see Figure 2-4, Table 3-10 and Appendices VI and VII). The three lowest activity levels were recorded at survey sites that were furthest from edge habitat and deeper within forest (D3, D4 and D6), in a habitat where Northern Myotis might be expected to occur (Jung *et al.*, 1999; Patriquin and Barclay, 2003). This suggests that while Northern Myotis may be present within the local study area, most of the recordings likely belonged to the Little Brown Myotis or species other than the Northern Myotis.

It is important to note that the Northern Myotis naturally occurs in smaller numbers than the Little Brown Myotis and that no baseline information exists for either species against which to compare the acoustic data collected in this study.

3.4.5 Reptile Species at Risk

3.4.5.1 Snapping Turtle

Snapping Turtles inhabit a wide variety of aquatic habitats including ponds, sloughs, shallow bays or river edges and slow streams. Snapping Turtles are tolerant of disturbance and will inhabit man-made ponds, ditches and canals. This species nests in sand and gravel banks along waterways and well as within a variety of man-made features (COSEWIC, 2008b).

Three types of hibernacula used by adult Snapping Turtles in Algonquin Park have been identified by Brown and Brooks (1994):

- stream sites where turtles are buried beneath logs, sticks, or overhanging banks in small streams that flow continuously throughout the winter;

- lakeshore sites where turtles are wedged beneath or beside submerged logs and stumps, sometimes covered in silt, within 5 m of the shoreline; and
- muddy sites where turtles are buried in deep anoxic mud in marshy areas or beneath floating mats of vegetation.

Female Snapping Turtles generally nest on sand and gravel banks along waterways, including artificial dam and railway embankments, however, muskrat houses, abandoned beaver lodges, road shoulders, fissures in rocky shorelines, sawdust heaps, freshly dug soil, gardens, lawns and forest clearings have all been recorded as nest sites with unknown success (COSEWIC, 2008b).

One Snapping Turtle was observed crossing Highway 144 near La Motte Lake Provincial Park. It is anticipated that the presence of this turtle is indicative of a local population that inhabits the vast network of lakes, streams and wetlands in the area.

3.4.6 Invertebrate Species at Risk

3.4.6.1 Monarch Butterfly

The Monarch (*Danaus plexippus*) habitat exists primarily wherever milkweed (*Asclepius* spp.) and wildflowers such as goldenrod, asters and Purple Loosestrife (*Lythrum salicaria*) exist. These areas include abandoned farmland, along roadsides and other open spaces where these plants grow; however, significant habitat for monarchs is generally associated with area of considerably dense patches of milkweed (COSEWIC, 2010).

Neither Monarchs nor milkweed were observed during wildlife or vegetation surveys. The local study area largely consists of boreal forest community types and little roadside or cultural vegetation is present. Butterflies in general were uncommonly encountered during field surveys and only five species were recorded. As Monarchs are highly dependent on dense patches of milkweed, significant habitat for Monarchs is considered absent where Project activities are proposed.

4.0 EVALUATION AND DISCUSSION

4.1 Environmental Indicators

An environmental indicator is any part of the environment that is considered important by the proponent, members of the public including Aboriginal communities, scientists and government representatives involved in the assessment process. Importance may be determined on the basis of cultural values or scientific concerns. Environmental indicators may include individual species, a guild of species, habitat types such as wetlands, or particular wildlife attributes (e.g., Significant Wildlife Habitat) such as SAR habitat and moose early winter habitats. Wetlands and wildlife attributes are present within the local study area and should be addressed as environmental indicators in the context of any future environmental effects analysis. There are no Areas of Natural and Scientific Interest, Provincially Significant Wetlands, Wildlife Concentration Areas or other provincially designated Natural Heritage Areas within the local study area (MNR, 2013a; b).

4.2 Species at Risk and Rare Wildlife

Based on field surveys, five avian SAR, one mammalian SAR and one reptilian SAR were identified as occurring within the local study area. Bald Eagle, Canada Warbler, Olive-sided Flycatcher were recorded in forested habitats within the local study area and are provincially designated as *Special Concern*. Canada Warbler and Olive-sided Flycatcher are also federally designated as *Threatened*. Rusty Blackbird was observed incidentally in proximity to open wetland habitat and is federally designated as *Special Concern*. Little Brown Myotis is provincially designated as *Endangered* and was also recorded in the local study area. A Snapping Turtle (provincially and federally designated as *Special Concern*) was observed in close proximity to the local study area and likely occurs in the open water and wetland habitats present in the local study area.

Under the provincial ESA, Sections 9 and 10 protect those species (and their habitat) listed as *Extirpated, Endangered* or *Threatened*. However, those species (and their habitat) with *Special Concern* status, including Bald Eagle, Canada Warbler and Olive-sided Flycatcher, are not afforded protection under the ESA. Best management practices are generally recommended for protection of *Special Concern* species and their habitats. Protection for these species, as with many other migratory birds present within the local study area is afforded through the MBCA, which prohibits the harming or killing these birds and/or destroying or collecting their eggs or nests. The Rusty Blackbird is not listed under the ESA or the MBCA but is provided protection under the FWCA.

As a SAR listed as *Endangered* under Ontario's ESA, Little Brown Myotis is currently afforded protection under the ESA. Little Brown Myotis is particularly at risk and/or population decline due to their low reproduction rate, communal hibernating behaviour and recent declines due to white-nose syndrome (WNS). WNS, an infection caused by *Geomyces destructans*, is a fungal pathogen that has been devastating bat populations across eastern North America. WNS grows

on the muzzle, ears and wings of hibernating bats and spreads quickly between hibernating bats which huddle together to thermoregulate during the winter. In doing so, infected individuals may pass the fungus to neighbouring bats. WNS causes bats to prematurely arouse from torpor (hibernation) in the winter and subsequently, leads to death from starvation due to excessive activity without a readily available food source.

4.3 Ecological Functions

4.3.1 Significant Wildlife Habitat and Linkages

The MNR defines Significant Wildlife Habitat (SWH) as ecologically important in terms of features, functions, representation or amount and contributing to the quality and diversity of an identifiable geographic area or Natural Heritage System (MNR, 2000). Significant Wildlife Habitats are divided into four main categories: Seasonal Concentration Areas of Animals, Rare Vegetation Communities or Specialized Habitat for Wildlife, Habitat for Species of Conservation Concern (excluding *Endangered or Threatened* species) and Animal Movement Corridors. The Draft Significant Wildlife Habitat Ecoregion 3E Criterion Schedules (MNR, 2012a) provide further information on determining the presence of significant wildlife habitat.

4.3.1.1 Seasonal Concentration Areas of Animals

The Draft SWH Ecoregion 3E Criterion Schedules outline 11 wildlife habitats meeting the criteria for Seasonal Concentration Areas of Animals, including:

- moose late winter cover;
- waterfowl stopover and staging areas (terrestrial);
- waterfowl stopover and staging areas (aquatic);
- shorebird migratory stopover area;
- bat hibernacula;
- bat maternity colonies;
- turtle wintering areas;
- reptile hibernacula;
- colonially nesting bird breeding habitat (bank and cliff);
- colonially nesting bird breeding habitat (tree/shrubs); and
- colonially nesting bird breeding habitat (ground).

Based on a review of Ecosites present, six of these 11 Seasonal Concentration Areas of Animals could occur within the local study area including: Moose Late Winter Cover, Waterfowl Staging Areas (Aquatic), Bat Maternity Colonies, Turtle Wintering Areas, Reptile Hibernacula and Colonially Nesting Bird Breeding Habitat (Tree/Shrubs). The presence or likelihood of

occurrence of these SWH types within the local study area are provided in Table 4-1. However, extensive 2013 field studies did not actually identify any SWH in the form of Seasonal Concentration Areas of Animals within the local study area (see Table 4-1). Furthermore, the 2009 to 2019 Romeo – Malette Forest Management Plan (FMP), 2011 to 2021 Timiskaming FMP and the 2011 to 2021 Spanish Forest FMP did not report the presence of Seasonal Concentration Areas of Animals for the local study area.

However, the landscape present within the local study area suggests a moderate to high probability that Moose Late Winter Cover and Reptile Hibernacula are present. There is a low to moderate probability that Bat Maternity Colonies are present within the local study area as well as a low probability that Waterfowl Stopover and Staging Areas (Aquatic) or Turtle Wintering Areas occur.

4.3.1.2 Rare Vegetation Communities or Specialized Habitat for Wildlife

As documented in Section 3, the local study area is comprised of a mixture of deciduous, mixedwood and coniferous forests and wetland ecosites. The Draft SWH Ecoregion 3E Criterion Schedules outline 11 habitats meeting the criteria for Rare Vegetation Communities, including:

- cliffs and talus slopes;
- rare treed type: Red Pine and Eastern White Pine stands;
- rare treed type: Black Ash;
- rare treed type: Elm;
- rare treed type: Oak;
- rare treed type: Red and Sugar Maple;
- rare treed type: Yellow Birch;
- rock barren;
- sand dunes (notably: American Dune grass type);
- Great Lakes Arctic-Alpine shoreline type; and
- Hardwood Swamps.

Based on field surveys, none of these Rare Vegetation Communities are present within the local study area (see Table 4-2).

Table 4-1: Seasonal Concentration Areas of Animals

Wildlife Habitat[1]	Candidate Significant Wildlife Habitat[1]		Potential Significant Wildlife Habitat within the Regional Study Area
	Provincial Ecosite Codes	Habitat Criteria	
Moose Late Winter Cover	B036-038, B049-053, B065-068, B081-087, B098-102, B114-117	Late winter moose habitat is characterized by dense conifer cover with greater than 60% canopy closure and >6m in height. Upland sites are preferred. More common on deeper soils with dense conifer cover and vegetation in the understory for browse. Snow depth in excess of 70 cm restrict moose movement during winter, however late winter thermal refuge is important in relieving heat stress. These habitats are extensively used by moose during late spring and summer due to the shade provided. Conifer stands >50 ha, dominated by tall trees >6 m, on gentle to moderately rugged sites with deep soils.	**Moderate** – Ecosites B049, B050, B082, B083 and B114 present. Local FMPs do not identify Moose Late Winter Cover in, or in proximity to the regional study area. Moose observed during winter and spring aerial surveys were observed in regenerating clearcuts and burns.
Waterfowl Stopover and Staging Areas (Terrestrial)	B060-062, B077-079, B093-095, B109-111	Includes fields with sheet water during spring (mid March to May) and flood plains (flooded river banks). Cultivated fields with waste grains commonly used by waterfowl are not considered significant wildlife habitat. Any mixed species aggregations of 100 or more individuals required to be considered significant wildlife habitat.	**None** – No suitable Ecosite present.
Waterfowl Stopover and Staging Areas (Aquatic)	B142-152	Ponds, marshes, lakes, bays, coastal inlets and watercourses used during migration. Sewage treatment ponds and storm water ponds do not qualify as a Significant Wildlife Habitat: however, a reservoir managed as a large wetland or pond/lake does qualify. Aggregations of 100 or more individuals of listed species for 7 days (results in >700 waterfowl use days) must be present.	**Low** – Ecosites B142/144 and B148/B149 present, but only associated with very small lakes or lake shorelines. Kenogamissi Lake and Mattagmi Lake may offer staging areas, though these lakes have not been identified as Waterfowl Staging Areas by the MNR in the Romeo Malette Forest Management Plan.
Shorebird Migratory Stopover Area	B005-006, B160-162, B170-172, B176-178, B186-188, B204, B207	Shorelines of lakes, rivers and wetlands, including beach areas, bars and seasonally flooded, muddy and un-vegetated shoreline habitats. Great Lakes coastal shorelines, including groynes and other forms of armour rock lakeshores, are extremely important for migratory shorebirds in May to mid-June and early July to October.	**None** – No suitable Ecosite present.

Wildlife Habitat[1]	Candidate Significant Wildlife Habitat[1]		Potential Significant Wildlife Habitat within the Regional Study Area
	Provincial Ecosite Codes	Habitat Criteria	
Bat Hibernacula	B158-159, B164-165, B174-175, B180-181	Hibernacula may be found in abandoned caves, mine shafts, underground foundations and karsts. Commonly associated as components of either Cliff or Rock Barren ecosites. The locations and site characteristics of bat hibernacula are relatively poorly known. The primary criteria is identification of known features.	**None** – No suitable Ecosite present.
Bat Maternity Colonies	B015-019, B023-028, B039-043, B054-059, B069-076, B087-092, B103-108, B118-125	Maternity colonies can be found in tree cavities and vegetation. Maternity roosts are not found in caves and mines in Ontario. Aspen is an important feature in Ecoregion 3E Maternity colonies located in mature (dominant trees >80 years old) deciduous or mixed forest stands with >10 large diameter (>25 cm dbh) wildlife trees per hectare. Female bats prefer wildlife trees (snags) of decay class 1-4: can be living or with bark mostly intact.	**Low to Moderate** – Ecosites B39, B40, B55, B58 and B104. Some large trees present throughout the ecosites, but large snags tree with suitable features (suitable decay class, loose bark) minimal.
Turtle Wintering Areas	B128-142, B145-152	For most turtles, wintering areas are in the same general area as their core habitat. Water has to be deep enough not to freeze and have soft mud substrates. Over-wintering sites are permanent water bodies, large wetlands and bogs or fens with adequate dissolved oxygen. Year-round persistence of standing or flowing water to depth, or presence of springs to prevent freezing is critical.	**Low** – Ecosites B128, B129, B130, B134, B136, B137, B139, B142 and B148. Many small lakes in the area are shallow and rocky and likely do not provide suitable substrate for overwintering turtles. No records or sightings of turtles within vicinity of the regional study area.
Reptile Hibernacula	B008-028, B128-139, B158-159, B164-165, B167-172, B174-175, B180-181, B183-188	For snakes, hibernation takes place in sites located below frost lines in burrows, rock crevices and other natural locations. Areas of broken and fissured rock are particularly valuable since they provide access to subterranean sites below the frost line. Wetlands can also be important over-wintering habitat in conifer or shrub swamps and swales, poor fens, or depressions in bedrock terrain with sparse trees or shrubs with sphagnum moss or sedge hummock ground cover, but talus, rock barren, crevice and caves are more typically related to these habitats.	**Moderate** – Ecosites B014, B128, B129, B130, B134, B136, B137 and B139 present. The regional study area is large and bedrock is generally close to the surface providing an abundance of entrances to subterranean openings. Only two total snakes were observed during field surveys.

Wildlife Habitat[1]	Candidate Significant Wildlife Habitat[1]		Potential Significant Wildlife Habitat within the Regional Study Area
	Provincial Ecosite Codes	Habitat Criteria	
Colonially - Nesting Bird Breeding Habitat (Bank and Cliff)	B001-004, B157-159, B173-175	Any site or areas with exposed soil banks, undisturbed or naturally eroding that is not a licensed/permitted aggregate area. Typically eroding banks, sandy hills, borrow pits, steep slopes and sand piles for Bank Swallow and cliff faces, bridge abutments, silos and barns for Cliff Swallows.	**None** – No suitable Ecosites present.
Colonially - Nesting Bird Breeding Habitat (Tree/Shrubs)	B045-059, B064-076, B081-092, B097-108, B113-137, B161-162, B177-178	May include a wide variety of tall treed ecosites. Great Blue Herons nest in live or dead standing trees in wetlands, lakeshores, islands and peninsulas. Shrubs and occasionally emergent vegetation may also be used. Most nests in trees are 11 to 15 m from ground, near the top of the tree. Bonaparte's Gulls nest in coniferous trees (preferably spruce-fir) near fens, bogs, swamps, ponds or lakes. Double-crested Cormorants prefer to nest in trees but will nest on the ground as well where trees are limited or have died and fallen.	**None** – Ecosites B045, B049, B050, B055, B058, B082, B083, B088, B104, B114, B127, B128, B129, B130, B134 and B136 present, but no nest colonies or evidence of herons or cormorants observed during aerial surveys. No OBBA records of heron or cormorant colonies in the area.
Colonially - Nesting Bird Breeding Habitat (Ground)	B008, B020-021, B030-031, B045-046, B061-062, B078-079, B094-095, B110-111, B142-144, B160-165, B169-172, B176-181, B185-188	Nesting colonies of gulls and terns are on islands or peninsulas (natural or artificial) associated with open water or in marshy areas, lakes or large rivers. Brewers Blackbird colonies are found loosely on the ground or in low bushes in close proximity to streams and irrigation ditches within farmlands.	**None** – Ecosites B045 and B142 are present. The Herring Gull nesting was confirmed in atlas square 17MN65 and listed as probably in 17MN76. Colonies likely occur on Mattagami Lake, which skirts the proposed TLA, yet will remain largely unimpacted by Project activities. No Brewers Blackbirds were observed during field surveys.

Note:
[1] Based on the Draft Significant Wildlife Habitat Ecoregion 3E Criterion Schedules (MNR, 2012a).

Table 4-2: Rare Vegetation Communities

Wildlife Habitat[1]	Candidate Significant Wildlife Habitat[1]		Potential Significant Wildlife Habitat within the Regional Study Area
	Provincial Ecosite Codes	Habitat Criteria	
Cliffs and Talus Slopes	B157-159, B173-175, B201-203, B166-168, B182-184	Cliffs: Vertical consolidate bedrock communities with a minimum height of 3 m and a slope of >60° or 173%. Talus: Rock accumulations at the base of cliffs, or former cobble beaches left behind after lake levels drop.	**None** – No Ecosites present.
Rare Treed Type: Red and White Pine Stands	B011, B015, B023, B027, B033, B039, B048, B054, B064, B069, B081, B087, B097, B103, B113, B118	Red Pine and Eastern White Pine stands attain their northern limit near the northern margin of the Clay Belt. They occur as sporadic, small stands and are generally found on dry, often exposed and rocky sites. However, these conditions can vary.	**None** – No Ecosites present.
Rare Treed Type: Black Ash	B019, B028, B056, B059, B071, B076, B089, B092, B105, B108, B120, B125	Black Ash stands are found within low lying, predominantly alluvial material throughout the Clay Belt.	**None** – No Ecosites present.
Rare Treed Type: Elm	B019, B043, B056, B059, B071, B076, B089, B092, B105, B108, B120, B125	Elm stands are found within low lying, predominantly alluvial material throughout the Clay Belt.	**None** – No Ecosites present.
Rare Treed Type: Oak	B017, B019, B028, B041, B043, B057, B059, B072, B076, B090, B092, B106, B108, B121, B125	Hardwood canopy within lower topographic positions. Fresh to moist moisture regimes with variable substrate textures.	**None** – No Ecosites present.
Rare Treed Type: Red and Sugar Maple	B018, B019, B028, B042, B043, B058, B059, B073(Mh), B074(Mr), B075, B076, B091, B092, B107, B108, B122(Mh), B123(Mr), B124, B125	Hardwood canopy containing Red and/or Sugar Maple. Generally on warmer-than-normal sites with a higher nutrient regime.	**None** – No Ecosites present.
Rare Treed Type: Yellow Birch	B019, B028, B040, B043, B055, B059, B070, B076, B088, B092, B104, B108, B119, B125	Hardwood canopy consisting mostly of Yellow Birch. Generally on warmer-than-normal sites with a higher nutrient regime.	**None** – Ecosites B088 and B104 present, but no Yellow Birch within the ecosites.
Rock Barren	B179, B180, B181, B163, B164, B165	Exposed bedrock areas (mostly exposed rock with <5 cm mineral or <10 cm organic material) and <25% vascular vegetation.	**None** – No Ecosites present.

Wildlife Habitat[1]	Candidate Significant Wildlife Habitat[1]		Potential Significant Wildlife Habitat within the Regional Study Area
	Provincial Ecosite Codes	Habitat Criteria	
Sand Dunes Notably: American Dune Grass Type	B005, B006, B142	Exposed mineral material community often associated with shorelines of lakes or exposed inland mineral material that has been shaped by aeolian (wind) processes. American Dune Grass Type: Open grassy sand dunes with Indicator Species: American dune grass, beach pea and sand cherry. Scattered White Spruce forest islands may also occur.	**None** – No Ecosites present.
Great Lakes Arctic-Alpine Shoreline Type	B161, B162	Found on the shoreline of Lake Superior on open basic bedrock. Vegetation consists mostly of arctic-alpine species.	**None** – No Ecosites present.
Hardwood Swamps	B130, B131, B132, B133	Dominant hardwood canopy that is located within lower topographic positions and subject to flooding. Nutrient regime is rich and substrate is mostly moderately deep to deep with variable textures.	**None** – No Ecosites present.

Note:
[1] Based on the Draft Significant Wildlife Habitat Ecoregion 3E Criterion Schedules (MNR, 2012a).

The Draft SWH Habitat Ecoregion 3E Criterion Schedules outline 13 wildlife habitats meeting the criteria for Specialized Habitat for Wildlife, including:

- waterfowl nesting area;
- bald eagle and osprey nesting habitat;
- woodland raptor nesting habitat;
- turtle nesting areas;
- seeps and springs;
- aquatic feeding habitat;
- mineral licks;
- denning sites for American Mink, River Otter, Gray Wolf, Eastern Wolf, Canada Lynx, American Marten, Fisher, Black Bear;
- wolf rendezvous sites;
- amphibian breeding habitat (wetlands);
- amphibian breeding habitat (woodland);
- mast producing areas; and
- Sharp-tailed Grouse Leks.

Based on a review of Ecosites present, six of these Specialized Habitats for Wildlife could occur within the local study area including: Bald Eagle and Osprey Nesting Habitat, Woodland Raptor Nesting Habitat, Aquatic Feeding Habitat, Denning Sites for American Mink, River Otter, Gray Wolf, Canada Lynx, American Marten, Fisher and Black Bear, Amphibian Breeding Habitat (Wetlands) and Mast Producing Areas (see Table 4-3). The 2009 to 2019 Romeo – Malette Forest FMP, 2011 to 2021 Timiskaming Forest FMP and the 2011 to 2021 Spanish Forest FMP reported the presence of Moose Aquatic Feeding Areas and Raptor Nesting Habitat (nests) within the local study area.

Field studies confirmed the presence of significant Bald Eagle Nesting Habitat, Raptor Nesting Habitat, Amphibian Breeding Habitat (Wetlands). A black bear denning site and Osprey nest were recorded within or in the vicinity of the local study area, though neither of these features could be confirmed as significant, as confirmation of breeding at the sites was not achieved.

Table 4-3: Specialized Habitat for Wildlife

Wildlife Habitat[1]	Candidate Significant Wildlife Habitat[1]		Potential Significant Wildlife Habitat within the Regional Study Area
	Provincial Ecosite Codes	Habitat Criteria	
Waterfowl Nesting Area	All upland habitats located adjacent to ELC ecosites: B129-135, B140-152, B224	A waterfowl nesting area extends 120 m from a wetland (>0.5 ha) or a cluster of three or more small (<0.5 ha) wetlands within 120 m of each individual wetland where waterfowl nesting is known to occur. Presence of 10 or more nesting pairs for listed species.	**Moderate** – Ring-necked Ducks were observed on most lakes adjacent to the regional study area, while Mallard, Common Goldeneye, Hooded Merganser, Common Merganser, Bufflehead and Canada Goose were also observed. Only large lakes such as Kenogamissi and Mattagami are likely to host significant numbers of nesting waterfowl. The proposed TLA would cross Lake Kenogamissi at a single point.
Bald Eagle and Osprey Nesting Habitat	Treed communities directly adjacent to riparian areas – rivers, lakes, ponds and wetlands.	Nests are associated with lakes, ponds, rivers or wetlands along treed shorelines, islands, or on structures over water. Osprey nests are usually at the top of a tree whereas Bald Eagle nests are typically in super canopy trees in a notch within the tree's canopy.	**Present** – Both Bald Eagle and Osprey nests observed during aerial surveys. Bald Eagle nest was occupied, yet 2013 occupancy of osprey nests observed during aerial surveys is uncertain. One Osprey observed during breeding bird point counts.
Woodland Raptor Nesting Habitat	May be found in all forested ELC Ecosites.	All natural or conifer plantation woodland/forest stands. Stick nests found in a variety of intermediate-aged to mature conifer, deciduous or mixed forests within tops or crotches of trees. Species such as Merlin or Coopers Hawk nest along forest edges sometimes on peninsulas or small off-shore islands.	**Present** – Treed communities covers most of the regional study area. Sharp-shinned Hawk, Red-tailed Hawk, Common Raven and other unidentified stick nests observed during aerial surveys and other ground studies. Broad-winged Hawks commonly observed in the regional study area. Barred Owls and Northern Saw-whet Owls also recorded during breeding season.

Wildlife Habitat[1]	Candidate Significant Wildlife Habitat[1]		Potential Significant Wildlife Habitat within the Regional Study Area
	Provincial Ecosite Codes	Habitat Criteria	
Turtle Nesting Areas	B003, B006-007, B031, B171-172, B187-188	Best nesting habitat for turtles are close to water and away from roads and sites less prone to loss of eggs by predation from skunks, raccoons or other animals. For an area to function as a turtle-nesting area, it must provide sand and gravel that turtles are able to dig in and are located in open, sunny areas. Nesting areas on the sides of municipal or provincial road embankments and shoulders are not significant wildlife habitat. Sand and gravel beaches adjacent to undisturbed shallow weedy areas of marshes, lakes and rivers are most frequently used.	**None** – No Ecosites present.
Seeps and Springs	Any forested Ecosite within the headwater areas of a stream could have seeps/ springs.	Seeps/Springs are areas where ground water comes to the surface. Often they are found within headwater areas within forested habitats. Any forested area (with <25% meadow/field/ pasture) within the headwaters of a stream or river system. Seeps and springs are important feeding and drinking areas especially in the winter will typically support a variety of plant and animal species.	**None** – No groundwater seepage visible. None identified by the MNR in Forest Management Plans for forest regions present in the regional study area.
Aquatic Feeding Habitat	Habitat may be found in all forested ecosites adjacent to water.	Wetlands and isolated embayments in rivers or lakes which provide an abundance of submerged aquatic vegetation such as pondweeds, water milfoil and yellow water lily are preferred sites. Adjacent stands of lowland conifer or mixed woods will provide cover and shade.	**Few** – No suitable aquatic habitats east of Lake Kenogamissi. This is reflected in the Romeo Malette Forest Management Plan. Scattered wetland crossings occur near the Mattagami First Nations Reserve and further south along the Shining Tree alignment. These are identified as Aquatic Feeding habitat in the Romeo Malette Forest Management Plan.
Mineral Licks	Habitat may be found in all treed ecosites.	This habitat component is found in upwelling groundwater and the soil around these seepage areas. It typically occurs in areas of sedimentary and volcanic bedrock. In areas of granitic bedrock, the site is usually overlain with calcareous glacial till.	**None** – No groundwater seepage identified within the regional study area.

Wildlife Habitat[1]	Candidate Significant Wildlife Habitat[1]		Potential Significant Wildlife Habitat within the Regional Study Area
	Provincial Ecosite Codes	Habitat Criteria	
Denning Sites for American Mink, River Otter, Gray Wolf, Eastern Wolf, Canada Lynx, American Marten, Fisher, Black Bear	Habitat may be found in all treed ecosites.	Dens usually underground, old beaver lodges, log jams and crevices in rock piles, cavities in large trees or under large downed woody debris or hollow trees. Generally, mature, continuous forests. Extensive searches for denning sites are not recommended as they are very difficult to locate.	**Present** – One bear den site observed during spring field surveys. An abundance of forested land and shoreline habitat is present within the regional study area. Rocky soil in the area provides abundant natural crevices suitable for denning.
Wolf Rendezvous Sites	Isolated open areas including bogs, fens, meadows, clearcuts.	Rendezvous sites may be found in a variety of habitats such as open bogs, burns, clearcuts, beaver meadows and open forest. Rendezvous sites are often used by wolf packs during multiple years.	**Low** – Potential habitat present and presence of wolves (e.g., tracks) were observed during winter aerial surveys. The high level of human activity along much of the regional study area likely discourages use of suitable habitat areas.
Amphibian Breeding Habitat (Wetlands)	B128-135, B141-152, B223-224	Rich swamps and thickets, vernal/seasonal pooling, riparian and variety of wetland interiors and margins. Wetlands and pools (including vernal pools) >500 m^2 (about 25 m diameter) supporting high species diversity are significant: some small or ephemeral habitats may be important amphibian breeding habitats. Wetlands and pools need to persist until mid-July. Presence of shrubs and logs increase significance of pond for some amphibian species because of available structure for calling, foraging, escape and concealment from predators.	**Present** – Ecosites B128, B129, B130, B134, B142 and B148 present. Potential significant wildlife habitat present in all ecosites. Field surveys recorded very high frog populations at most count stations.
Amphibian Breeding Habitat (Woodland)	All treed upland ecosites, however more likely on fine textured moist ecosites B119-125	Presence of a wetland, lake or pond of area >500 m^2 (about 25 m diameter) within or adjacent (within 120 m) to a woodland (no minimum size) are significant: some small or ephemeral habitats may be important amphibian breeding habitats. Wetlands and pools need to persist until mid-July.	**Moderate** – Vernal pooling uncommon yet present in areas surveyed. Most treed land is well drained. Ecosites B119 -125 absent from the regional study area. One Four-toed Salamander discovered.

Wildlife Habitat[1]	Candidate Significant Wildlife Habitat[1]		Potential Significant Wildlife Habitat within the Regional Study Area
	Provincial Ecosite Codes	Habitat Criteria	
Mast Producing Areas	All shrub and treed ecosites capable of producing mast.	Significant tree species include Northern Mountain-ash and Pin Cherry. Significant shrub species include blueberries, raspberries, Beaked Hazel and Choke Cherry. Some oak or other hard-mast producing species may be present in 3E. Permanent open sites providing long-term food sources are more significant.	**Moderate to High** – Mast producing species such as blueberries, raspberries, Beaked Hazel, Northern Mountain-ash and cherries present throughout the upland and wetland ecosites within the regional study area.
Sharp-tailed Grouse Leks	B029-031, B044-046, B060-062, B077-079, B093-095, B109-111, B126, B136-141	The lek or dancing ground consists of bare, grassy area as the core of the lekking area and may contain some sparse shrubland. There is often a knoll or slightly elevated rise in topography associated with the site. Leks are typically a grassy field/meadow separated by >15 ha from adjacent shrublands and >30 ha from adjacent treed areas.	**None** – Ecosites B044, B045 B136, B137and B139 present, but no Sharp-tailed Grouse observed or known to occur in the vicinity of the regional study area.

Note:
[1] Based on the Draft Significant Wildlife Habitat Ecoregion 3E Criterion Schedules (MNR, 2012a).

There is a high probability of SWH in the form of Mast Producing Area presence in the local study area due to the high prevalence of Beaked Hazel, the presence of clearcuts carpeted in blueberry bushes and, to a lesser extent, Northern Mountain-ash and cherries. Significant Waterfowl Nesting Areas and Amphibian Breeding Habitat (Woodland) have a moderate likelihood of occurrence in the local study area. The proposed Shining Tree alignment would span a portion of Lake Kenogamissi, a large lake, which has marshy shorelines. Field studies confirmed that frogs are abundant in the local study area and thus, amphibian breeding likely occurs in many wet depressions occurring in local woodlands.

The presence of a variety of habitats preferred by wolves as rendezvous sites (e.g., open bogs, burns, clearcuts, beaver meadows and open forest) suggest that this habitat type may occur within or in proximity to the local study area. Wolf tracks were encountered during winter aerial surveys which confirm this species uses the local study area in the winter, though summer use of the local study area was not documented during 2013 field investigations. The probability of Wolf rendezvous sites occurring in the local study area is low, due in part to the occurrence of silviculture practices and the presence of cottages, roads and highways, and associated human activities in the area.

4.3.1.3 Habitat for Species of Conservation Concern

The Draft SWH Ecoregion 3E Criterion Schedules outline four wildlife habitats meeting the criteria for Habitat for Species of Conservation Concern, including:

- marsh bird breeding habitat;
- open country bird breeding habitat;
- shrub/early successional bird breeding habitat; and
- special concern and rare wildlife species.

Based on the extensive 2013 baseline surveys, a review of Ecosites and wildlife present, no significant Marsh Bird, Open Country Bird, or Shrub/Early Successional Bird Breeding Habitat and Habitats for Special Concern and Rare Wildlife Species are present within the regional study area (see Table 4-4).

Table 4-4: Habitat for Species of Conservation Concern

Wildlife Habitat[1]	Candidate Significant Wildlife Habitat[1]		Potential Significant Wildlife Habitat within the Regional Study Area
	Provincial Ecosite Codes	Habitat Criteria	
Marsh Bird Breeding Habitat	B134-B152	Nesting occurs in wetlands. All wetland habitats are is to be considered as long as there is shallow water with emergent aquatic vegetation present.	**None** – Ecosites B134, B136, B137, B139 and B148 present, but no marsh breeding birds were observed. Only one suitable marsh feature present in the regional study area. Feature associated with Lake Kenogamissi. American Bittern, Ring-necked Duck and Sandhill Crane were the only marsh bird species recorded during breeding bird surveys and marsh bird monitoring surveys.
Open Country Bird Breeding Habitat	B008-009, B020-021, B029-031, B044-046, B060-062, B077-079, B093-095, B109-111	Large field/meadow areas (includes natural and cultural fields and meadows) >30 ha. Field/meadow not Class 1 or 2 agricultural lands and not being actively used for farming (e.g., no row cropping or intensive hay or livestock pasturing in the last 5 years). Field/meadow sites considered significant should have a history of longevity, either abandoned fields, mature hayfields and pasturelands that are at least 5 years or older.	**None** – Ecosites B044 and B045 present, but no habitats >30 ha present. No grassland bird species recorded during breeding field surveys.
Shrub/Early Successional Bird Breeding Habitat	B009-010, B021-022, B031-032, B046-047, B062-063, B079-080, B095-096, B111-112, B134-135	Large natural field areas succeeding to shrub and thicket habitats >30 ha in size. Shrub land or early successional fields, not class 1 or 2 agricultural lands, not being actively used for farming (e.g., no row-cropping, haying or live-stock pasturing in the last 5 years). Shrub and thicket habitat sites considered significant should have a history of longevity, either abandoned fields or pasturelands.	**None** – Ecosite B134 present, but no habitats >30 ha present. No shrub/successional species recorded during breeding field surveys.
Special Concern and Rare Wildlife Species	All plant and animal element occurrences (EO).	Species dependent.	**Present** – Four provincial species of *Special Concern* (Canada Warbler, Common Nighthawk, Olive-sided Flycatcher and Bald Eagle) confirmed in the regional study area.

Note:
[1] Based on the Draft Significant Wildlife Habitat Ecoregion 3E Criterion Schedules (MNR, 2012a).

4.3.1.4 Animal Movement Corridors

The Draft SWH Ecoregion 3E Criterion Schedules outline three wildlife habitats meeting the criteria for Animal Movement Corridor habitat, including:

- amphibian movement corridors;
- cervid movement corridors; and
- furbearer movement corridor.

Based on a review of Ecosites and wildlife present, significant Amphibian, Cervid and Furbearer Movement Corridor habitat is considered likely in the regional study area (see Table 4-5). Given the abundance of frogs recorded during evening surveys it is anticipated that most water crossings within the local study area function as Amphibian Movement Corridors. Though no mineral licks were identified for the local study area, Aquatic Feeding Habitat is present in proximity to the Mattagami Lake Reserve and the northeastern shores of Kenogamissi Lake. Moose travelling to and from these feeding sites will use adjacent forested habitat. Many creeks, streams and lakeshores cross the local study area, thus providing an abundance of potential movement corridor habitat for furbearers. Though American Marten and Weasel tracks were uncommonly documented during the winter and spring aerial surveys, River Otters were quite common. Given the long, narrow shape of lakes in the Swayze greenstone belt, otters are likely to remain along lake shorelines from which they can travel long distances if required.

4.4 Environmental Constraints and Sensitivities

4.4.1 Avoidance of Effects to Species at Risk

The Little Brown Myotis is listed as *Endangered* under Ontario's ESA, which prohibits harming or destroying / disturbing habitat for this species under Sections 9 and 10 of the Act. This species was recorded at four of six detector locations across the local study area, indicating it is widespread in the local study area. However, no significant bat habitat was found within the local study area during baseline field studies, though due to the large size of the local study area, the possibility of undetected bat habitat remains. Care should be taken to avoid the destruction of natural features which may provide significant bat habitat.

Table 4-5: Animal Movement Corridors

Wildlife Habitat[1]	Candidate Significant Wildlife Habitat[1]		Potential Significant Wildlife Habitat within the Regional Study Area
	Provincial Ecosite Codes	Habitat Criteria	
Amphibian Movement Corridors	Corridors may be found in all ecosites associated with water.	Movement corridors between breeding habitat and summer habitat. Movement corridors must be determined when amphibian breeding habitat is confirmed as Significant Wildlife Habitat.	**High** – Potential amphibian wetland breeding habitats suggest amphibian movement corridors occur within streams or wetlands areas crossing the regional study area linking available breeding habitats.
Cervid Movement Corridors	Corridors may be found in all treed ecosites.	Movement corridor must be determined when Moose Aquatic Feeding Area and Mineral Lick Habitat are confirmed. Corridors typically follow riparian areas, woodlots, areas of physical geography (ravines, ridges and linear features such as existing right-of-ways).	**High** – Local FMPs (MNR) indicate the presence of Moose Aquatic Feeding Areas along, or near to, the regional study area. Nearby riparian areas, forests and areas of physical geography (ravines, or ridges) likely act as movement corridors for local moose.
Furbearer Movement Corridor	All treed Ecosites adjacent to or within shoreline habitats.	American Mink and River Otter den sites are typically found within a riparian area of a lake, river, stream or wetland. The den site will potentially have a movement corridor associated with it. Den sites of other furbearer species may be more associated with social, hunting, breeding or other behaviours. All den sites identified under the habitat of Denning Sites for American Mink, River Otter, American Marten, Fisher and Eastern Wolf should be considered for an animal movement corridor.	**High** – The vast area covered by the regional study area contains suitable forest denning habitat bounded by streams and lake shorelines. Furbearer species such as Canada Lynx, American Marten, weasels, wolves and Black Bear were confirmed during winter aerial surveys and summer field surveys. Wolves have been frequently recorded using linear features such as right-of-ways as efficient movement corridors increasing predation risk to species using these features.

Note:
[1] Based on the Draft Significant Wildlife Habitat Ecoregion 3E Criterion Schedules (MNR, 2012a).

Little Brown Myotis uses forests with a high density of large diameter cavity trees as maternity colonies (>25 cm dbh and forest stands >80 years old). Use of maternity colony stands generally occurs between June and July, thus tree clearing of potential bat habitat should generally be undertaken outside of this time period to avoid harming or disrupting roosting bats. If tree clearing must be undertaken between the months of May and August, consultation with the MNR should be undertaken prior to clearing activities to confirm other seasonal restrictions (such as the breeding bird season) and surveys should be undertaken to confirm the presence of significant roosting habitat. Should roosting colonies be located within these areas, consultation with the MNR and Environment Canada will be required to establish whether clearing activities may continue, whether SAR permitting is required, and whether habitat compensation will be required.

The Bald Eagle, Canada Warbler, Common Nighthawk, and Olive-sided Flycatcher are designated as a species of *Special Concern* under ESA and as such, there is no formal regulation under the ESA to prohibit harming or destroying / disturbing habitat for these species. Canada Warbler, Common Nighthawk and Olive-sided Flycatcher are afforded protection under the SARA (*Threatened*, Schedule 1 species). These species are also protected under the MBCA and as such, tree clearing should be undertaken outside the breeding bird season. Bald Eagles and their nests are protected under the FWCA of which Sections 5(1) and 7(1) prohibit the killing of protected birds and the destruction or taking possession of nests and eggs.

4.4.2 Avoidance of Major Tree Clearing During the Breeding Bird Season

Major tree clearing efforts should be avoided during the breeding bird season. There is currently no permit for incidental taking of migratory bird nests/eggs and/or individuals but most species listed in Tables 3-3 and 3-4 are protected under the MBCA which means that habitat with nests cannot be destroyed until the fledgling birds have left the nest. For some species, the Ontario songbird nesting season is generally understood to start in late May and extend until August 15 (Cadman *et al.,* 2007). Hawks, eagles, owls, and ravens often begin nesting in late March.

As such, tree clearing should generally be undertaken from August 16 to April 1 to avoid disrupting any species during their nesting season as is required under the MBCA and FWCA. However, consultation with the MNR and Environment Canada should be undertaken prior to clearing activities to confirm seasonal restrictions. If tree clearing must be undertaken between the months of February and July, surveys should be conducted to confirm nesting activity prior to tree clearing activities. Should nesting sites be located within these areas, appropriate avoidance buffer areas around active nests would be required until the young have left the nest on their own accord. Appropriate buffers will vary depending on the species and should be implemented based on consultation with the MNR and Environment Canada.

5.0 CONCLUSION

This Terrestrial Ecology Baseline Study has identified vegetation and wildlife communities located within the local study area and has described their existing conditions. Vegetation and wildlife communities identified herein are typical of those inhabiting the mixed-boreal forest region of northern Ontario. Upland communities and ecosites consisted of deciduous, mixedwood, coniferous and cultural habitats. Wetland communities and ecosites consisted of swamp, fen and marsh-type wetlands.

Based on field surveys, five avian SAR, one mammalian SAR and one reptilian SAR were identified as occurring within the local study area. Bald Eagle, Canada Warbler, Olive-sided Flycatcher were recorded in forested habitats within the local study area and are provincially designated as *Special Concern*. Canada Warbler and Olive-sided Flycatcher are also federally designated as *Threatened*. Rusty Blackbird was observed incidentally in proximity to open wetland habitat and is federally designated as *Special Concern*. Little Brown Myotis is provincially designated as *Endangered* and was also recorded in the local study area. A Snapping Turtle (provincially and federally designated as *Special Concern*) was observed in close proximity to the local study area and likely occurs in the open water and wetland habitats present in the local study area. Consultation with the MNR should be undertaken to determine if a permit or further study is required for any of these species.

6.0 CLOSURE

This report has been developed based on information gathered from secondary source information and field surveys. We trust that this report is sufficient for your needs. Should additional information be required, please contact Stephan Theben or Matthew Evans at (905) 568-2929.

Regards,

AMEC Environment & Infrastructure, a Division of AMEC Americas Limited

Prepared by:



Jon Pleizier, B.Sc.
Terrestrial Ecologist



Izabela Kalkowski, M.Sc.
Terrestrial Ecologist

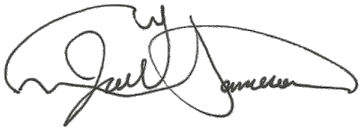

Joel Jameson, M.Sc.
Terrestrial Ecologist

Reviewed by:



Matthew Evans, Ph.D.
Senior Terrestrial Ecologist

7.0 REFERENCES

Audubon and Cornell Lab of Ornithology. 2013. eBird. Accessed July 2013 from http://ebird.org/content/ebird/.

Baerwald, E.F. and R.M.R. Barclay. 2009. Geographic Variation in Activity and Fatality of Migratory Bats at Wind Energy Facilities. Journal of Mammalogy, 90:1341-1349.

Barclay, R.M.R. 1984. Observations on the Migration, Ecology, and Behaviour of Bats at Delta Marsh, Manitoba. Canadian Field Naturalist, 98:331-336.

Bird Studies Canada. 2009. Marsh Monitoring Program Participant's Handbook for Surveying Marsh Birds. 2009 Edition. Published by Bird Studies Canada in Cooperation with Environment Canada and the U.S. Environmental Protection Agency. February 2009. 17 pages.

Bird Studies Canada. 2012. Marsh Bird Survey Protocol. Accessed July 2013 from http://www.bsc-eoc.org/

Bilecki, L.C. 2003. Bat Hibernacula in the Karst Landscape of Central Manitoba: Protecting Critical Wildlife Habitat While Managing for Resource Development. Thesis submitted to the Natural Resources Institute.

Cadman, M.D., D.A. Sutherland, G.G. Beck, D. Lepage and A.R. Couturier. 2007. Atlas of the Breeding Birds of Ontario. Bird Studies Canada, Environment Canada, Ontario Field Ornithologists, Ontario Ministry of Natural Resources, Ontario Nature. 728 pages.

Cink, C.L. 2002. Eastern Whip-poor-will (*Caprimulgus vociferus*), *In* The Birds of North America Online (A. Poole, Ed.). Ithaca: Cornell Lab of Ornithology; Accessed June 2013 from http://bna.birds.cornell.edu/bna/species/620.

Committee on the Status of Endangered Wildlife in Canada (COSEWIC). 2006. COSEWIC Assessment and Status Report on the Rusty Blackbird (*Euphagus carolinus*) in Canada. Committee on the Status of Endangered Wildlife in Canada. Ottawa. vi + 28 pages.

Committee on the Status of Endangered Wildlife in Canada (COSEWIC). 2007a. COSEWIC Assessment and Status Report on the Common Nighthawk (*Chordeiles minor*) in Canada. Committee on the Status of Endangered Wildlife in Canada. Ottawa. vi + 25 pages.

Committee on the Status of Endangered Wildlife in Canada (COSEWIC). 2007b. COSEWIC Assessment and Status Report on the Olive-sided Flycatcher (*Contopus cooperi*) in Canada. Committee on the Status of Endangered Wildlife in Canada. Ottawa. vii + 25 pages.

Committee on the Status of Endangered Wildlife in Canada (COSEWIC). 2007c. COSEWIC Assessment and Status Report on the Chimney Swift (*Chaetura pelagic*) in Canada. Committee on the Status of Endangered Wildlife in Canada. Ottawa. vii + 49 pages.

Committee on the Status of Endangered Wildlife in Canada (COSEWIC). 2008a. COSEWIC Assessment and Update Status Report on the Canada Warbler (*Wilsonia canadensis*) in Canada. Committee on the Status of Endangered Wildlife in Canada. Ottawa. vi + 35 pages.

Committee on the Status of Endangered Wildlife in Canada (COSEWIC). 2008b. COSEWIC Assessment and Update Status Report on the Snapping Turtle (*Chelydra serpentina*) in Canada. Committee on the Status of Endangered Wildlife in Canada. Ottawa. vii + 47 pages.

Committee on the Status of Endangered Wildlife in Canada (COSEWIC). 2009. COSEWIC Assessment and Status Report on the Whip-poor-will (*Caprimulgus vociferous*) in Canada. Committee on the Status of Endangered Wildlife in Canada. Ottawa. vi + 28 pages.

Committee on the Status of Endangered Wildlife in Canada (COSEWIC). 2010. COSEWIC Assessment and Status Report on the Monarch (*Danaus plexippus*) in Canada. Committee on the Status of Endangered Wildlife in Canada. Ottawa. vii + 43 pages.

Committee on the Status of Endangered Wildlife in Canada (COSEWIC). 2011. COSEWIC Assessment and Status Report on the Barn Swallow (*Hirundo rustica*) in Canada. Committee on the Status of Endangered Wildlife in Canada. Ottawa. ix + 37 pages.

Crins, W.J., P.A. Gray, P.W.C. Uhlig and M.C. Wester. 2009. The Ecosystems of Ontario, Part I: Ecozones and Ecoregions. Ministry of Natural Resources, Peterborough Ontario, Inventory, Monitoring and Assessment, SIB TER IAM TR-01.

Dobbyn, J.S. 1994. Atlas of the Mammals of Ontario. Federation of Ontario Naturalists, Toronto. 120 pages.

Ecological Land Classification Working Group (ELCWG). 2009. Boreal Ecosite Classification Manual.

Environment Canada. 2013. National Climate Data and Information Archive: Timmins Ontario. Accessed July 2013 http://www.climate.weatheroffice.gc.ca/Welcome_e.html.

Ford, D.C. 1961. The Bonnechere Caves, Renfrew County, Ontario: A Note. Canadian Geographer, 3:22-25.

Golder Associates. 2013. IAMGOLD Corporation Terrestrial Baseline Studies, Côté Gold Project. 162 pages.

Heath, S.R., E.H. Dunn and D.J. Agro. 2009. Black Tern (*Chlidonias niger*), *In* The Birds of North America Online (A. Poole, Ed.). Cornell Lab of Ornithology, Ithaca, New York.

Hitchcock, H.B., R. Keen and A. Kurta. 1984. Survival Rates of *Myotis leibii* and *Eptesicus fuscus* in Southeastern Ontario. Journal of Mammalogy, 65:126-130.

Jung, T.S., I.D. Thompson, R.D. Titman and A.P. Applejohn. 1999. Habitat Selection by Forest Bats in Relation to Mixed-Wood Stand Types and Structure in Central Ontario. The Journal of Wildlife Management, 63:1306-1319.

Kunz, T.H. and E.L.P. Anthony. 1982. Age Estimation and Post-Natal Growth in The Little Brown Bat (*Myotis lucifugus*). Journal of Mammalogy, 63:23-32.

Lalonde, R., E. Banton, M. Wester and P. Uhlig. 2012. A Guide to Translate Northeastern Ontario Ecosites into “Ecosites of Ontario”. Ontario Ministry of Natural Resources. NESI Technical Note TN-023.

Norquay, J.O., F. Martinez-Nuñez, J.E. Dubois, K.M. Monson and C.K.R. Willis. 2013. Long-Distance Movements of Little Brown Bats *(Myotis lucifugus*). Journal of Mammalogy, 94:506-515.

Oldham, M.J. and W.F. Weller. 2000. Ontario Herpetofaunal Atlas. Natural Heritage Information Centre, Ontario Ministry of Natural Resources. Accessed June 2013 from http://nhic.mnr.gov.on.ca/MNR/nhic/herps/ohs.html (updated 15-01-2010).

Ontario Institute of Pedology’s (OIP). 1993. Field Manual for Describing Soils in Ontario.

Ontario Ministry of Natural Resources (MNR). 2000. Significant Wildlife Habitat Technical Guide. Fish and Wildlife Branch, Wildlife Section, Science Development and Transfer Branch, South-central Sciences Section. 151 pages.

Ontario Ministry of Natural Resources (MNR). 2009. 2009 – 2019 Forest Management Plan for the Romeo Malette Forest.

Ontario Ministry of Natural Resources (MNR). 2010a. 2012 – 2022 Forest Management Plan for the Spanish Forest.

Ontario Ministry of Natural Resources (MNR). 2010b. 2012 – 2022 Forest Management Plan for the Abitibi River Forest.

Ontario Ministry of Natural Resources (MNR). 2010c. Forest Resource Inventory Mapping. Information Access, Peterborough, ON. Provided August 2011.

Ontario Ministry of Natural Resources (MNR). 2010d. Forest Management Guide for Conserving Biodiversity at the Stand and Site Scales. Toronto: Queen's Printer for Ontario. 211 pages.

Ontario Ministry of Natural Resources (MNR). 2011a. 2011 – 2021 Forest Management Plan for the Pineland Forest.

Ontario Ministry of Natural Resources (MNR). 2011b. 2011 – 2021 Forest Management Plan for the Timiskaming Forest.

Ontario Ministry of Natural Resources (MNR). 2011c. Bats and Bat Habitats: Guidelines for Wind Power Projects. Queen's Printer for Ontario: July 2011.

Ontario Ministry of Natural Resources (MNR). 2012a. Draft Significant Wildlife Habitat Ecoregion 3E Criterion Schedule.

Ontario Ministry of Natural Resources (MNR). 2013a. Biodiversity Explorer. Ontario Natural Heritage Information Centre. Accessed January - June 2013 from http://nhic.mnr.gov.on.ca/.

Ontario Ministry of Natural Resources (MNR). 2013b. Land Information Ontario (LIO). Accessed June 2013 from http://www.OMNR.gov.on.ca/en/Business/LIO/2ColumnSubPage/STEL02_167954.html.

Ontario Ministry of Natural Resources (MNR). 2013c. Natural Heritage Information Centre (NHIC). Accessed June, 2013 from https://www.biodiversityexplorer.mnr.gov.on.ca/

Ontario Ministry of Northern Development and Mines (MNDM). 2012. OGS Earth. Accessed June 2013 from: http://www.mndm.gov.on.ca/en/mines-and-minerals/applications/ogsearth.

Ontario Ministry of Northern Development and Mines (MNDM). 2013. Abandoned Mines. Ontario Ministry of Northern Development and Mines. Accessed June 2013 from http://www.mndm.gov.on.ca/en/mines-and-minerals/applications/ogsearth.

Ontario Odonata Atlas. 2005. Natural Heritage Information Centre, Ontario Ministry of Natural Resources (Updated 15-02-2005). Accessed September 2012 from http://www.mnr.gov.on.ca/MNR/nhic/odonates/ohs.html.

Parsons, S., K.J. Lewis and J.M. Psyllakis. 2003. Relationships Between Roosting Habitat of Bats and Decay of Aspen in the Sub-Boreal Forests of British Columbia. Forest Ecology and Management, 177:559-570.

Patriquin, K.J. and R.M.R. Barclay. 2003. Foraging by Bats in Cleared, Thinned and Unharvested Boreal Forest. Journal of Applied Ecology, 40:646–657.

Pokharel, B., J.P. Deck and P. Uhlig. 2012. A Tool for Converting Forest Ecosystem Classifications for Permanent or Temporary Growth Plots into New Provincial Ecological Land Classification (ELC) System in The Boreal Regions of Ontario. The Forestry Chronicle, 88:49-59.

Psyllakis, J.M. and R.M. Brigham. 2006. Characteristics of Diurnal Roosts Used by Female Myotis Bats in Sub-Boreal Forests. Forest Ecology and Management, 223:93-102.

Rowe, J.S. 1972. Forest Regions of Canada. Fisheries and Environment Canada, Canadian Forest Service, Headquarters, Ottawa. 172 pages.

Taylor, K.C., R.W. Arnup, B.G. Merhcant, W.J. Parton and J. Nieppola. 2000. A Field Guide to Forest Ecosystems of Northeastern Ontario. Ontario Ministry of Natural Resources, Northeast Science and Technology. Field Guide FG-001.

Thomas, D.W., M.B. Fenton and R.M.R. Barclay. 1979. Social Behaviour of the Little Brown Bat, *Myotis lucifugus*. Behavioral Ecology and Sociobiology, 6:129-136.

Toronto Entomologists Society. 2012. Ontario Butterfly Atlas Online. Accessed July 2012 from http://www.ontarioinsects.org/atlas_online.htm.

Watt, R.W. and M.C. Caceres. 1999. Managing for Snags in The Boreal Forests of Northeastern Ontario. Ontario Ministry of Natural Resources, Northeast Science and Technology, Technical Note 16. 20 pages.

United-States Fish and Wildlife Service (USFWS). 2012. National White-Nose Syndrome Decontamination Protocol – Version 06.25.2012. Accessed August 2013, from http://static.whitenosesyndrome.org/sites/default/files/resource/national_wns_revise_final_6.25.12.pdf.

United-States Fish and Wildlife Service (USFWS). 2013. Bat Survey Protocol for Assessing Use of Potential Hibernacula. Accessed August 2013 from http://www.fws.gov/midwest/endangered/mammals/inba/pdf/inba_srvyprtcl.pdf

FIGURES

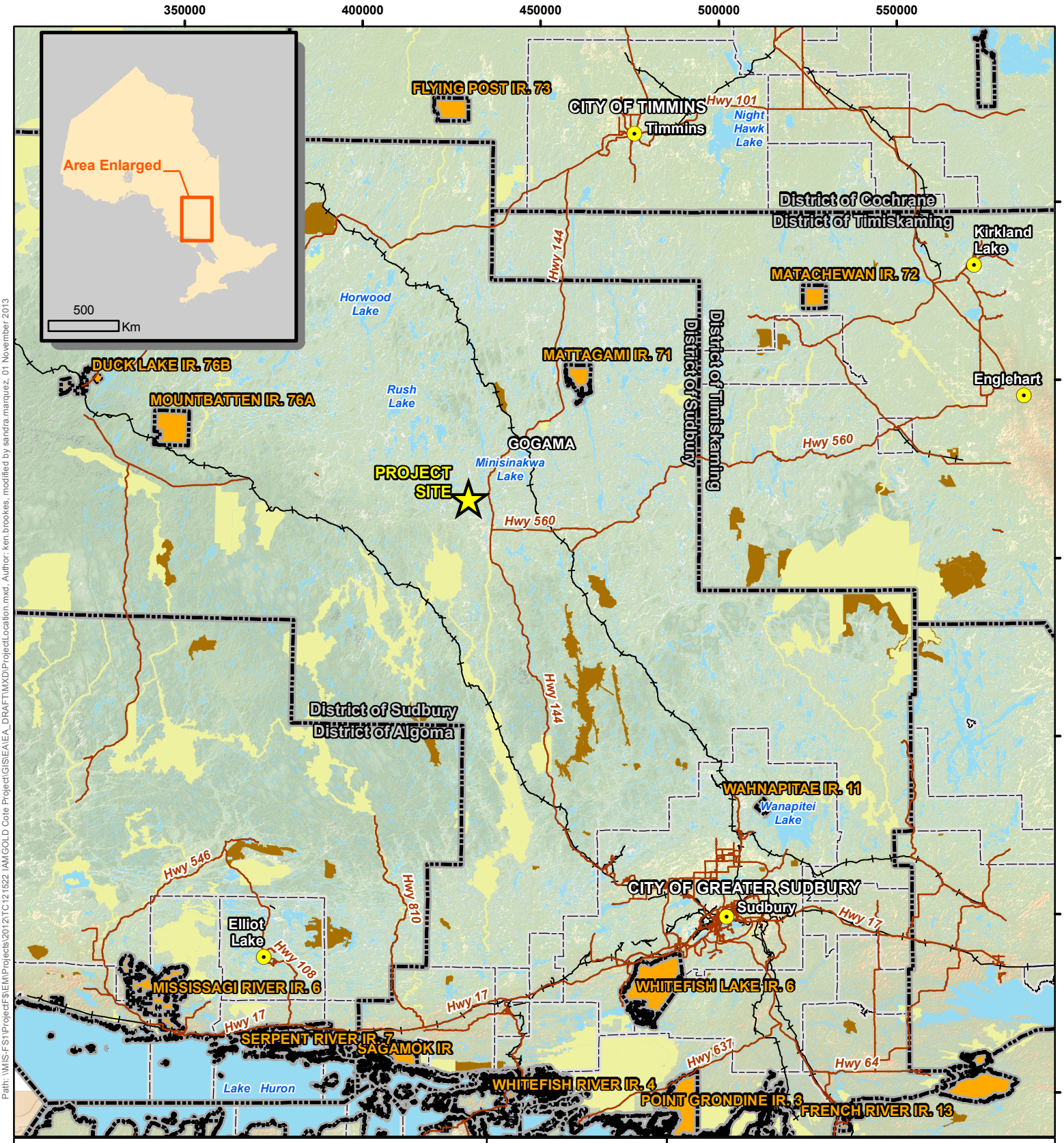

Path: \\MIS-FS1\Projects$\EM\Projects\2012\TC121522 IAMGOLD Cote Project\GIS\EA\EA_DRAFT\MXD\ProjectLocation.mxd, Author: ken.brookes, modified by sandra.marquez, 01 November 2013

LEGEND

- Project Site Location
- Regional Communities
- Major Roads
- Railway
- Lower Tier Municipality Boundary
- Upper Tier Municipality Boundary
- First Nation Reserve
- Conservation Reserve (Regulated)
- Provincial Park
- Waterbody / Large Watercourse
- Wooded Area

NOTES:
- All base data on this map was extacted from Land Information Ontario, MNDM, OBM Ontario Digital Geospatial Database and Ontario Road Network Database.

0 20 40 60 80 100 Kilometres

Datum: NAD83
Projection: UTM Zone 17N

IAMGOLD CORPORATION

amec

CÔTÉ GOLD PROJECT

Project Location

PROJECT N°: TC121522	FIGURE: 1-1
SCALE: 1:1,450,000	DATE: November 2013

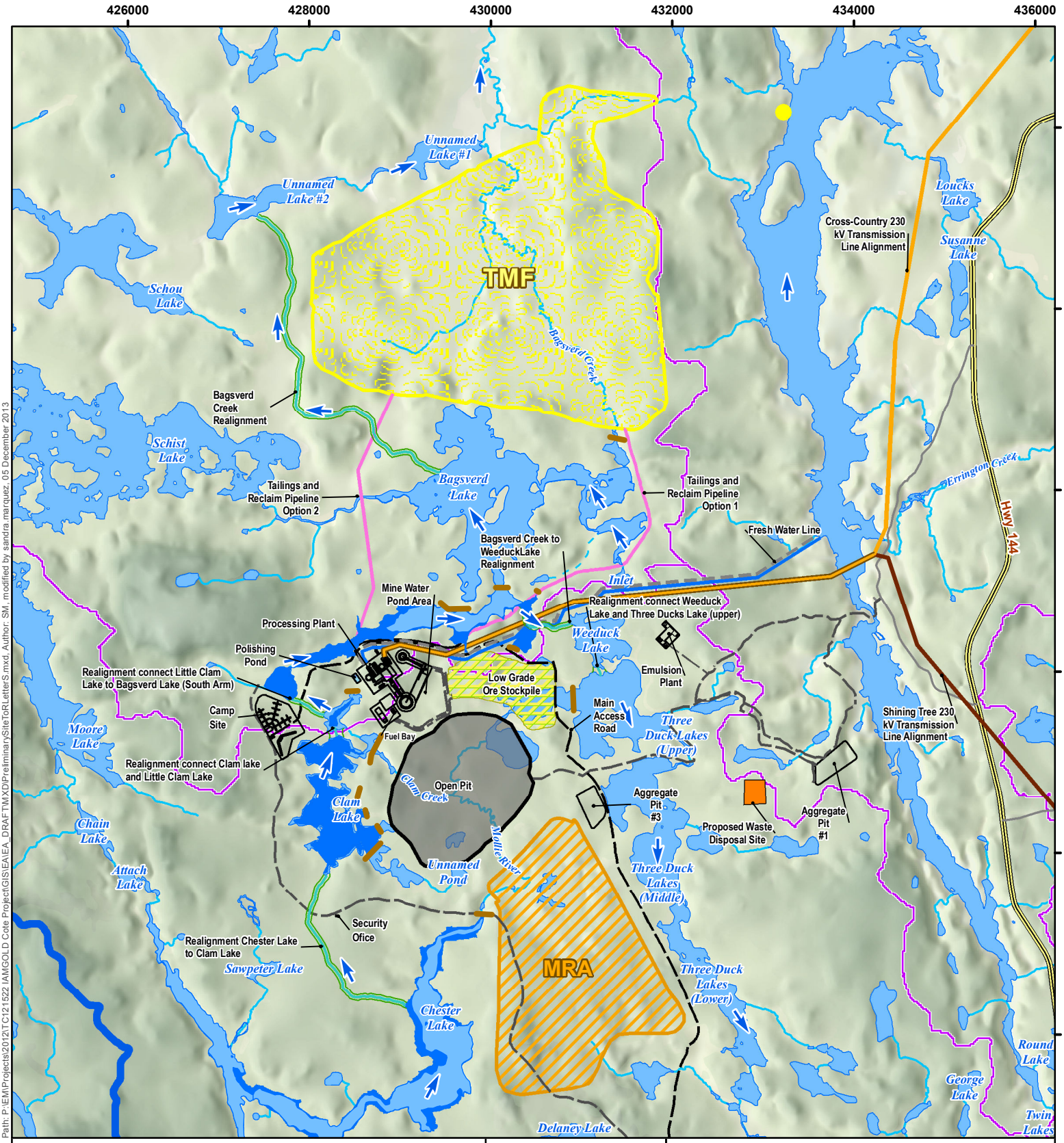

Path: P:\EM\Projects\2012\TC121522 IAMGOLD Cote Project\GIS\EA\EA_DRAFTMXD\PreliminarySiteToRLetterS.mxd, Author: SM, modified by sandra marquez, 05 December 2013

LEGEND

- Existing Intermittent Watercourse
- Existing Permanent Watercourse
- Existing Waterbodies
- Highway
- Local Road
- Subwatershed Boundary
- Wooded Area
- Open Pit
- Potential Discharge Location
- Facilities
- Dam
- Main Access Road
- Access Road
- Cross-Country 230 kV Transmission Line Alignment
- Shining Tree 230 kV Transmission Line Alignment
- Tailings and Reclaim Pipeline
- Fresh Water
- Water Realignment
- Proposed Water Flow Direction
- Proposed Lake Area
- Polishing Pond
- Low Grade Ore Stockpile
- Proposed Mine Rock Area (MRA)
- Proposed Tailings Management Facility (TMF)
- Proposed Landfill

NOTES:
- Ontario base data extracted from Land Information Ontario (MNR)
- TMF and subwatershed provided by Golder Associates.
- Watercourse realignment and proposed lake area provided by Calder Engineering.
- Surface infrastructure, open pit, landfill, MRA and transmission lines provided by IAMGOLD.
- Mesomikenda Lake is preferred discharge option, but others are being investigated.

IAMGOLD CORPORATION

amec

CÔTÉ GOLD PROJECT

Preliminary Site Plan

Datum: NAD83
Projection: UTM Zone 17N

0 1 2 3 4 5 Kilometres

N W E S

PROJECT N°: TC121522 | FIGURE: 1 - 2

SCALE:1:57,000 | DATE: November 2013

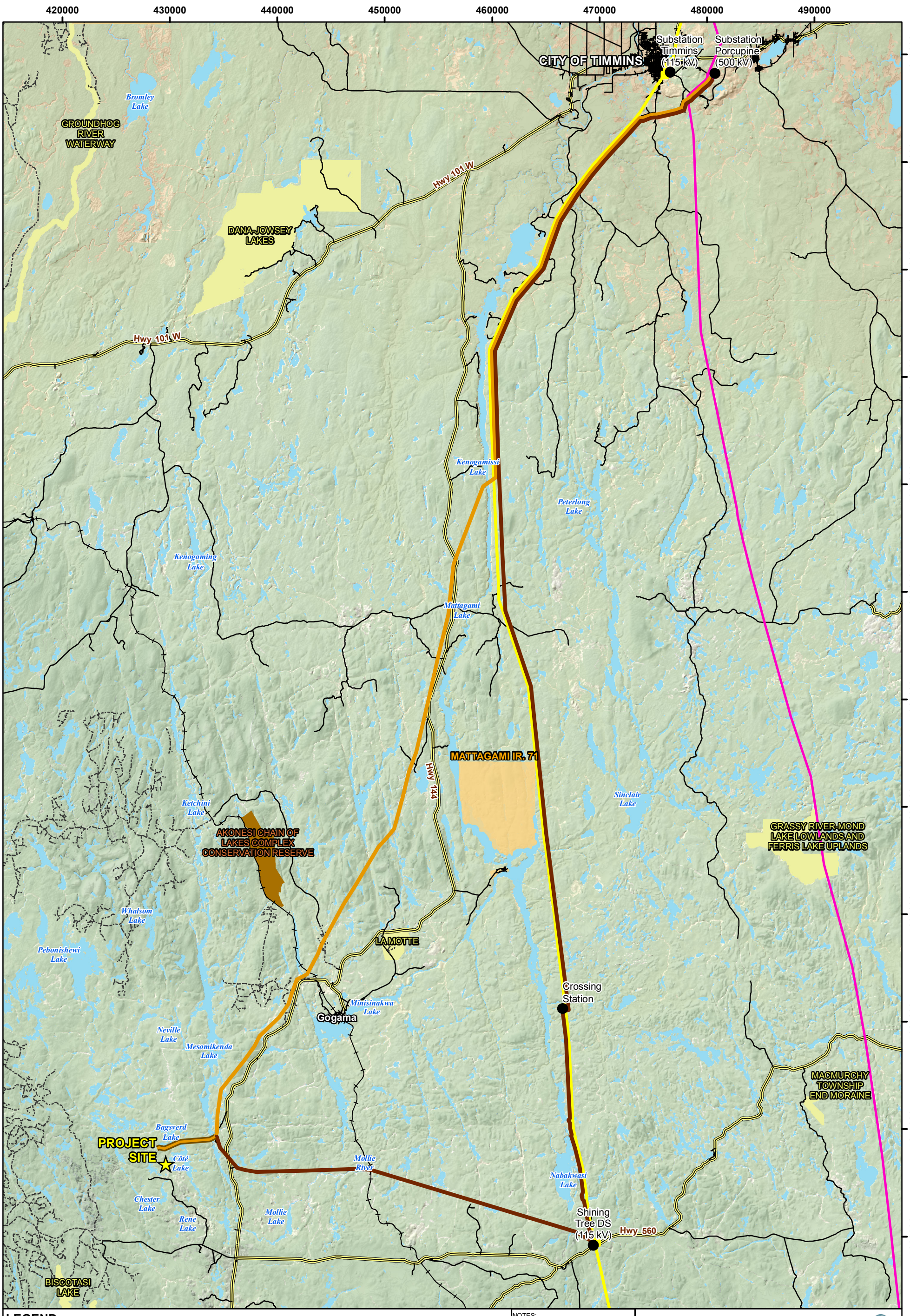

Path: P:\EM\Projects\2012\TC121522 IAMGOLD Cote Project\GIS\Terrestrial\MXD\2013_Baseline_Report_November2013\Transmission ToR.mxd, Author: ken.brookes, modified by monica.deveau, 28 November 2013

LEGEND

- Project Site Location
- Substations
- Proposed Cross-Country 230 kV Transmission Line Alignment
- Proposed Shining Tree 230 kV Transmission Line Alignment
- Existing 115 kV Transmission Line
- Existing 500 kV Transmission Line
- Railway
- Highway/Expressway
- Local Road
- Resource / Recreation Road
- First Nation Reserve
- Conservation Reserve (Regulated)
- Provincial Park

NOTES:
- Base data on this map was extracted from Land Information Ontario, MNDM, OBM Ontario Digital Geospatial Database and Ontario Road Network Database.

Datum: NAD83
Projection: UTM Zone 17N

0 5 10 20 30 40 Kilometres

IAMGOLD CORPORATION amec

CÔTÉ GOLD PROJECT

Proposed Transmission Line Alignments

PROJECT N°: TC121522 | **FIGURE: 1-3**

SCALE: 1:327,000 | DATE: November 2013

420000 430000 440000 450000 460000 470000 480000 490000

5370000 5360000 5350000 5340000 5330000 5320000 5310000 5300000 5290000 5280000 5270000 5260000

CITY OF TIMMINS

GROUNDHOG RIVER WATERWAY

DANA-JOWSEY LAKES

Kenogamissi Lake

Peterlong Lake

Mattagami Lake

Cross-Country

Shinningtree

MATTAGAMI R. 71

Sinclair Lake

AKONESI CHAIN OF LAKES COMPLEX CONSERVATION RESERVE

GRASSY RIVER-MOND LAKE LOWLANDS AND FERRIS LAKE UPLANDS

LA MOTTE

Pebonishewi Lake

Minisinakwa Lake

Mesomikenda Lake

GOGAMA

MACMURCHY TOWNSHIP END MORAINE

Bagsverd Lake

BISCOTASI LAKE

Path: P:\EMProjects\2012\TC121522 IAMGOLD Cote Project\GIS\TerrestrialMXD\2013_Baseline_Report_November2013\TLA_Study_Area.mxd, Author: SM, modified by monica.deveau, 28 November 2013

LEGEND

- Project Site Location
- 2 km Study Area
- Roads
- Railway
- Existing 115 kV Transmission Line

PROPORSED 230 kV TRANSMISSION LINE
- Cross-Country
- Shinningtree

CONSERVATION
- First Nation Reserve
- Conservation Reserve (Regulated)
- Provincial Park

RESIDENTIAL, TOURISM AND COTTAGES
- Cottage Residential Area
- Tourism Establishment Area

NOTES:
- Topographic data extraction from Land Information Ontario (Ministry of Natural Resourses)

Datum: NAD83
Projection: UTM Zone 17N

0 5 10 20 30 40 Kilometres

IAMGOLD® CORPORATION amec

CÔTÉ GOLD PROJECT

Transmission Line Study Area

PROJECT N°: TC121522 | FIGURE: 1-4

SCALE: 1:325,000 | DATE: November 2013

460000 465000 470000 475000 480000

5365000 5360000 5355000 5350000 5345000 5340000 5335000

TIMMINS
HIGHWAY 101
KAMISKOTIA ROAD
JAGUAR DRIVE
RIVERSIDE DRIVE
DALTON ROAD
MALETTE LUMBER ROAD
HIGHWAY 101 WEST
PINE STREET SOUTH
WAWIATIN ROAD
Kenogamissi Lake
PINE STREET
HIGHWAY 144

Path: P:\EM\Projects\2012\TC121522 IAMGOLD Cote Project\GIS\Terrestrial\MXD\2013_Baseline_Report_November2013\Vegetation_Survey_Locations.mxd, Author: SM, modified by monica.deveau, 28 November 2013

LEGEND

- Vegetation Survey Location
- 2 km Study Area
- Railway
- Roads
- Existing 115 kV Transmission Line

PROPOSED TRANSMISSION LINE
- Cross-Country
- Shinningtree

RESIDENTIAL, TOURISM AND COTTAGES
- Cottage Residential Area
- Tourism Establishment Area

CONSERVATION
- First Nation Reserve
- Conservation Reserve (Regulated)
- Provincial Park

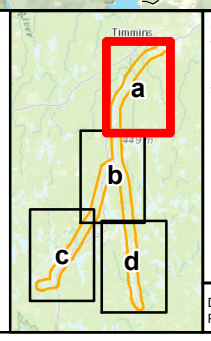

NOTES:
- Topographic data extraction from Land Information Ontario (Ministry of Natural Resourses)
- Background imagery provided by IAMGOLD Corporation

Datum: NAD83
Projection: UTM Zone 17N

0 1 2 4 6 8 10 Kilometres

IAMGOLD CORPORATION amec

CÔTÉ GOLD PROJECT

Vegetation Survey Locations

PROJECT N°: TC121522	**FIGURE: 2-1a**
SCALE: 1:104,000	DATE: November 2013

450000 455000 460000 465000 470000

5330000 5325000 5320000 5315000 5310000 5305000 5300000 5295000

Peterlong Lake

Mattagami Lake

HIGHWAY 144

MATTAGAMI INDIAN RESERVE NO. 71

Path: P:\EMProjects\2012\TC121522 IAMGOLD Cote Project\GIS\Terrestrial\MXD\2013_Baseline_Report_November2013\Vegetation_Survey_Locations.mxd, Author: SM, modified by monica.deveau, 28 November 2013

LEGEND

- Vegetation Survey Location
- 2 km Study Area
- Railway
- Roads
- Existing 115 kV Transmission Line

PROPOSED TRANSMISSION LINE
- Cross-Country
- Shinningtree

RESIDENTIAL, TOURISM AND COTTAGES
- Cottage Residential Area
- Tourism Establishment Area

CONSERVATION
- First Nation Reserve
- Conservation Reserve (Regulated)
- Provincial Park

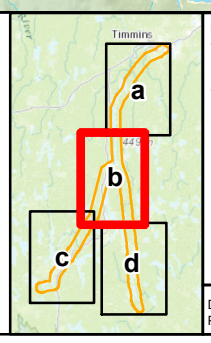

NOTES:
- Topographic data extraction from Land Information Ontario (Ministry of Natural Resourses)
- Background imagery provided by IAMGOLD Corporation

Datum: NAD83
Projection: UTM Zone 17N

0 1 2 4 6 8 10 Kilometres

IAMGOLD® CORPORATION amec

CÔTÉ GOLD PROJECT

Vegetation Survey Locations

PROJECT N°: TC121522 | FIGURE: 2-1b

SCALE: 1:104,000 | DATE: November 2013

425000 430000 435000 440000 445000 450000

5295000 5290000 5285000 5280000 5275000 5270000 5265000

AKONESI CHAIN OF LAKES COMPLEX CONSERVATION RESERVE

ROAD 402 215 403 106 213 2010 2011 JACK ROAD 570 566 HIGHWAY 110 HIGHWAY 144 LA MOTTE HIGHWAY 667

Mesomikenda Lake

Bagsverd Lake

Minisinakwa Lake

Path: P:\EM\Projects\2012\TC121522 IAMGOLD Cote Project\GIS\Terrestrial\MXD\2013_Baseline_Report_November2013\Vegetation_Survey_Locations.mxd, Author: SM, modified by monica.deveau, 28 November 2013

LEGEND

- Vegetation Survey Location
- 2 km Study Area
- Railway
- Roads
- Existing 115 kV Transmission Line

PROPOSED TRANSMISSION LINE
- Cross-Country
- Shinningtree

RESIDENTIAL, TOURISM AND COTTAGES
- Cottage Residential Area
- Tourism Establishment Area

CONSERVATION
- First Nation Reserve
- Conservation Reserve (Regulated)
- Provincial Park

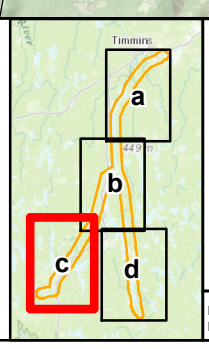

NOTES:
- Topographic data extraction from Land Information Ontario (Ministry of Natural Resourses)
- Background imagery provided by IAMGOLD Corporation

Datum: NAD83
Projection: UTM Zone 17N

0 1 2 4 6 8 10 Kilometres

IAMGOLD CORPORATION amec

CÔTÉ GOLD PROJECT

Vegetation Survey Locations

PROJECT N°: TC121522	**FIGURE: 2-1c**
SCALE: 1:104,000	DATE: November 2013

455000 460000 465000 470000 475000 480000

5295000 5290000 5285000 5280000 5275000 5270000 5265000 5260000

MATTAGAMI INDIAN RESERVE NO. 71

HIGHWAY 144

HIGHWAY 660

Path: P:\EMProjects\2012\TC121522 IAMGOLD Cote Project\GIS\Terrestrial\MXD\2013_Baseline_Report_November2013\Vegetation_Survey_Locations.mxd, Author: SM, modified by monica.deveau, 28 November 2013

LEGEND

- Vegetation Survey Location
- 2 km Study Area
- Railway
- Roads
- Existing 115 kV Transmission Line

PROPOSED TRANSMISSION LINE
- Cross-Country
- Shinningtree

RESIDENTIAL, TOURISM AND COTTAGES
- Cottage Residential Area
- Tourism Establishment Area

CONSERVATION
- First Nation Reserve
- Conservation Reserve (Regulated)
- Provincial Park

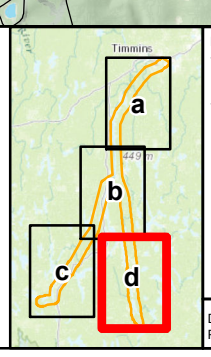

NOTES:
- Topographic data extraction from Land Information Ontario (Ministry of Natural Resourses)
- Background imagery provided by IAMGOLD Corporation

Datum: NAD83
Projection: UTM Zone 17N

0 1 2 4 6 8 10 Kilometres

N W E S

IAMGOLD® CORPORATION amec

CÔTÉ GOLD PROJECT

Vegetation Survey Locations

PROJECT N°: TC121522	**FIGURE: 2-1d**
SCALE: 1:104,000	DATE: November 2013

425000 450000 475000 500000

5375000 5350000 5325000 5300000 5275000

CITY OF TIMMINS

GROUNDHOG RIVER WATERWAY

DANA-JOWSEY LAKES

Kenogamissi Lake

Peterlong Lake

Mattagami Lake

MATTAGAMI IR. 71

Sinclair Lake

AKONESI CHAIN OF LAKES COMPLEX CONSERVATION RESERVE

LA MOTTE

GRASSY RIVER-MOND LAKE LOWLANDS AND FERRIS LAKE UPLANDS

Pebonishewi Lake

Minisinakwa Lake

GOGAMA

Mesomikenda Lake

Bagsverd Lake

MACMURCHY TOWNSHIP END MORAINE

BISCOTASI LAKE

Path: P:\EMProjects\2012\TC121522 IAMGOLD Cote Project\GIS\Terrestrial\MXD\2013_Baseline_Report_November2013\Flightlines.mxd, Author: SM, modified by monica.deveau, 28 November 2013

LEGEND

- Project Site Location
- Cross-Country TL Flight Line
- Shiningtree TL Flight Line
- Railway
- Roads

CONSERVATION

- First Nation Reserve
- Conservation Reserve (Regulated)
- Provincial Park

RESIDENTIAL, TOURISM AND COTTAGES

- Cottage Residential Area
- Tourism Establishment Area

NOTES:
- Topographic data extraction from Land Information Ontario (Ministry of Natural Resourses)

0 5 10 20 30 40 Kilometres

Datum: NAD83
Projection: UTM Zone 17N

N W E S

IAMGOLD® CORPORATION amec

CÔTÉ GOLD PROJECT

Aerial Survey Transect Lines

PROJECT N°: TC121522 | **FIGURE: 2-2**

SCALE: 1:325,000 | DATE: November 2013

460000 465000 470000 475000 480000

5365000 5360000 5355000 5350000 5345000 5340000 5335000

CITY OF TIMMINS
HIGHWAY 101
KAMISKOTIA ROAD
JAGUAR DRIVE
RIVERSIDE DRIVE
DALTON ROAD
MALETTE LUMBER ROAD
HIGHWAY 101 WEST
PINE STREET SOUTH
PINE STREET
HIGHWAY 144
Kenogamissi Lake

CB8 CB9 CB10 CB11 CB12 CB13 CB15 CB17 CB18 CB19 CB20 CB21 CB22 CB23 CB24 CB25 CB29 CB34

BB1 BB2 BB3 BB4 BB5 BB6 BB7 BB8 BB9 BB10 BB11 BB12 BB13 BB14 BB17 BB18 BB19 BB20 BB21 BB22 BB23 BB24 BB25 BB26 BB27 BB28 BB29 BB30 BB31 BB32 BB33 BB34 BB35 BB36 BB37 BB38 BB39 BB40 BB41 BB42 BB43 BB44 BB45 BB46 BB47 BB48 BB49 BB50 BB51 BB52 BB53 BB54 BB55 BB56 BB57 BB58

MB2-A MB2-B MB2-C MB2-D BT2-A BT2-B BT2-C BT2-D

Path: P:\EMProjects\2012\TC121522 IAMGOLD Cote Project\GIS\Terrestrial\MXD\2013_Baseline_Report_November2013\Bird_Survey_Locations.mxd, Author: SM, modified by monica.deveau, 28 November 2013

LEGEND

- Breeding Bird Survey Location
- Marsh Bird Survey Location
- Black Tern Survey Location
- Crepuscular Survey Location (Round 1)
- Crepuscular Survey Location (Round 2)
- Crepuscular Survey Location (Round 1 and 2)
- 2 km Study Area
- Railway
- Roads
- Existing 115 kV Transmission Line

PROPOSED 230 kV TRANSMISSION LINE
- Cross-Country
- Shinningtree

RESIDENTIAL, TOURISM AND COTTAGES
- Cottage Residential Area
- Tourism Establishment Area

CONSERVATION
- First Nation Reserve
- Conservation Reserve (Regulated)
- Provincial Park

Timmins a b c d

NOTES:
- Topographic data extraction from Land Information Ontario (Ministry of Natural Resources)
- Background imagery provided by IAMGOLD Corporation

Datum: NAD83
Projection: UTM Zone 17N

N W E S

0 1 2 4 6 8 10 Kilometres

IAMGOLD CORPORATION amec

CÔTÉ GOLD PROJECT

Bird Survey Locations

PROJECT N°: TC121522 | FIGURE: 2-3a

SCALE: 1:104,000 | DATE: November 2013

450000 455000 460000 465000 470000

5330000 5325000 5320000 5315000 5310000 5305000 5300000 5295000

BB54 BB58 BB55 BB51 BB56 BB57

Peterlong Lake

BB60 BB59 BB63 BB64 BB65 BB69 BB67 BB68

Mattagami Lake

CB47 CB48

CB49

HIGHWAY 144

CB53

BB96 BB100 BB99 BB103 BB104 BB105 BB109 BB106 BB97 BB98 BB102 BB110 BB108 BB107 BB101

BB171 BB170 BB169 BB175 BB177 BB178 BB172 BB173 BB174 BB176 BB180 CB54 BB179 BB181 CB55

MATTAGAMI INDIAN RESERVE NO. 71

BB110 BB118 BB113 BB117 BB122 BB123 BB114 BB115 BB111 BB116 BB120 BB119

Path: P:\EMProjects\2012\TC121522 IAMGOLD Cote Project\GIS\Terrestrial\MXD\2013_Baseline_Report_November2013\Bird_Survey_L

LEGEND

- Breeding Bird Survey Location
- Marsh Bird Survey Location
- Black Tern Survey Location
- Crepuscular Survey Location (Round 1)
- Crepuscular Survey Location (Round 2)
- Crepuscular Survey Location (Round 1 and 2)
- 2 km Study Area
- Railway
- Roads
- Existing 115 kV Transmission Line

PROPOSED 230 kV TRANSMISSION LINE
- Cross-Country
- Shinningtree

RESIDENTIAL, TOURISM AND COTTAGES
- Cottage Residential Area
- Tourism Establishment Area

CONSERVATION
- First Nation Reserve
- Conservation Reserve (Regulated)
- Provincial Park

0 1 2 4 6 8 10 Kilometres

Timmins a b c d

NOTES:
- Topographic data extraction from Land Information Ontario (Ministry of Natural Resourses)
- Background imagery provided by IAMGOLD Corporation

Datum: NAD83
Projection: UTM Zone 17N

N W E S

IAMGOLD CORPORATION amec

CÔTÉ GOLD PROJECT

Bird Survey Locations

PROJECT N°: TC121522 | FIGURE: 2-3b

SCALE: 1:104,000 | DATE: November 2013

425000 430000 435000 440000 445000 450000

5295000 5290000 5285000 5280000 5275000 5270000 5265000

AKONESI CHAIN OF LAKES COMPLEX CONSERVATION RESERVE

ROAD 402 215 403 106 213 2010 2011 JACK ROAD 570 566 HIGHWAY 144 HIGHWAY 651 LA MOTTE

Mesomikenda Lake Bagsverd Lake Minisinakwa Lake

CB62 CB63 CB64 CB65 CB66 CB67 CB68 CB69 CB70 CB71 CB72 CB73 CB74 CB75 CB76 CB79 CB80 CB83 CB84 CB85 CB86 CB87 CB88 CB89 CB136 CB137

BB71 BB72 BB73 BB74 BB75 BB76 BB77 BB78 BB79 BB80 BB81 BB82 BB83 BB84 BB85 BB86 BB87 BB88 BB89 BB90 BB91 BB92 BB93 BB94 BB95

MB1-A MB1-B MB1-C MB1-D MB1-E

BT1-A BT1-B BT1-C BT1-D BT1-E

Path: P:\EMProjects\2012\TC121522 IAMGOLD Cote Project\GIS\TerrestrialMXD\2013_Baseline_Report_November2013\Bird_Survey_Locations.mxd, Author: SM, modified by monica.deveau, 28 November 2013

LEGEND

- Breeding Bird Survey Location
- Marsh Bird Survey Location
- Black Tern Survey Location
- Crepuscular Survey Location (Round 1)
- Crepuscular Survey Location (Round 2)
- Crepuscular Survey Location (Round 1 and 2)
- 2 km Study Area
- Railway
- Roads
- Existing 115 kV Transmission Line

PROPOSED 230 kV TRANSMISSION LINE
- Cross-Country
- Shinningtree

RESIDENTIAL, TOURISM AND COTTAGES
- Cottage Residential Area
- Tourism Establishment Area

CONSERVATION
- First Nation Reserve
- Conservation Reserve (Regulated)
- Provincial Park

0 1 2 4 6 8 10 Kilometres

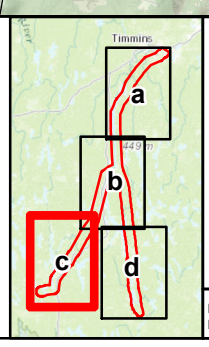

NOTES:
- Topographic data extraction from Land Information Ontario (Ministry of Natural Resourses)
- Background imagery provided by IAMGOLD Corporation

Datum: NAD83
Projection: UTM Zone 17N

N W E S

IAMGOLD CORPORATION amec

CÔTÉ GOLD PROJECT

Bird Survey Locations

PROJECT N°: TC121522 | **FIGURE: 2-3c**

SCALE: 1:104,000 | DATE: November 2013

455000 460000 465000 470000 475000 480000

5295000 5290000 5285000 5280000 5275000 5270000 5265000 5260000

MATTAGAMI INDIAN RESERVE NO. 71

HIGHWAY 144

HIGHWAY 560

BB125 BB126 BB127 CB144 BB128 BB132 BB129 BB133 BB130 BB134 BB131 BB135 CB143

BB144 BB141 BB142 BB140 CB142 BB145 BB139 BB148 BB143 CB141 BB146 BB151 BB149 BB153 BB152 BB147 BB150 CB140

CB139 CB119 CB118 CB117 CB116 CB115 CB120

CB135 CB129 CB127 CB128 BB155 BB154 BB157 CB130 BB156 BB160 BB158 BB159 BB162 CB131 BB161 BB167 BB163 BB168 BB164 BB166 BB165 CB133 CB134

CB145

Path: P:\EMProjects\2012\TC121522 IAMGOLD Cote Project\GIS\Terrestrial\MXD\2013_Baseline_Report_November2013\Bird_Survey_Locations.mxd, Author: SM, modified by monica.deveau, 28 November 2013

LEGEND

- Breeding Bird Survey Location
- Marsh Bird Survey Location
- Black Tern Survey Location
- Crepuscular Survey Location (Round 1)
- Crepuscular Survey Location (Round 2)
- Crepuscular Survey Location (Round 1 and 2)
- 2 km Study Area
- Railway
- Roads
- Existing 115 kV Transmission Line

PROPOSED 230 kV TRANSMISSION LINE
- Cross-Country
- Shinningtree

RESIDENTIAL, TOURISM AND COTTAGES
- Cottage Residential Area
- Tourism Establishment Area

CONSERVATION
- First Nation Reserve
- Conservation Reserve (Regulated)
- Provincial Park

0 1 2 4 6 8 10 Kilometres

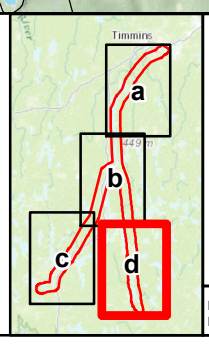

NOTES:
- Topographic data extraction from Land Information Ontario (Ministry of Natural Resourses)
- Background imagery provided by IAMGOLD Corporation

Datum: NAD83
Projection: UTM Zone 17N

N W E S

IAMGOLD CORPORATION amec

CÔTÉ GOLD PROJECT

Bird Survey Locations

PROJECT N°: TC121522	**FIGURE: 2-3d**
SCALE: 1:104,000	DATE: November 2013

460000 465000 470000 475000 480000

5365000 5360000 5355000 5350000 5345000 5340000 5335000

CITY OF TIMMINS
PARK AVENUE
HIGHWAY 101
KAMISKOTIA ROAD
JAGUAR DRIVE
RIVERSIDE DRIVE
DALTON ROAD
MALETTE LUMBER ROAD
HIGHWAY 101 WEST
WAWIATIN ROAD
PINE STREET SOUTH
PINE STREET
HIGHWAY 144
Kenogamissi Lake

00104
00085
00131
00093
00031
00435
00149
00062
00064
00069

Bat 19d
Bat 19e
Bat 19f
Bat 19c
Bat 19b
Bat 19a
Bat 20c
Bat 20b
Bat 20a
Bat 20d
Bat 20e
Bat 20f

Path: P:\EMProjects\2012\TC121522 IAMGOLD Cote Project\GIS\Terrestrial\MXD\2013_Baseline_Report_November2013\Bat_Survey_Locations_Page1_2.mxd, Author: SM, modified by monica.deveau, 28 November 2013

LEGEND

- Acoustic Bat Survey Location
- Potential Bat Roosting Location
- Bat Habitat Survey Location
- 320 m Proposed Transmission Line Setback
- 2 km Study Area
- Railway
- Roads
- Existing 115 kV Transmission Line

PROPOSED 230 kV TRANSMISSION LINE
- Cross-Country
- Shinningtree

ABANDONED MINES
- No Data
- Open Pit
- Trench
- Vertical Shaft
- Open Pit/Trench
- Open Pit/Rock Dump
- Vertical Shaft/Open Pit
- Vertical Shaft/Trench

CONSERVATION
- First Nation Reserve
- Conservation Reserve (Regulated)
- Provincial Park

RESIDENTIAL, TOURISM AND COTTAGES
- Cottage Residential Area
- Tourism Establishment Area

0 1 2 4 6 8 10 Kilometres

Timmins
a
b
c
d

NOTES:
- Topographic data extraction from Land Information Ontario (Ministry of Natural Resourses)
- Abandoned mine information extracted from Ministry of Northern Development and Mines.
- Background extracted from ESRI
- Background imagery provided by IAMGOLD Corporation

Datum: NAD83
Projection: UTM Zone 17N

N W E S

IAMGOLD® CORPORATION amec

CÔTÉ GOLD PROJECT

Bat Habitat and Acoustic Survey Locations

PROJECT N°: TC121522	**FIGURE: 2-4a**
SCALE: 1:104,000	DATE: November 2013

450000 455000 460000 465000 470000

5330000 5325000 5320000 5315000 5310000 5305000 5300000 5295000

Bat 21f Bat 21e Bat 21d Bat 21a Bat 21b Bat 21c Bat 22a Bat 22b Bat 22c Bat 22f Bat 22e Bat 22d HIGHWAY 144

Bat 15e Bat 15d Bat 15f Bat 15b Bat 15c Bat 15a Bat 16b Bat 16c Bat 16a Bat 16e Bat 16d Bat 16f

Bat 31a Bat 31b Bat 31c HIGHWAY 144 Bat 31f Bat 31e Bat 31d Bat 32a Bat 32b Bat 32c Bat 32f Bat 32e Bat 32d

Bat 13b Bat 14b Bat 13a Bat 14a Bat 13c Bat 14c Bat 13f Bat 14f Bat 14d Bat 13d Bat 13e Bat 14e

D4 D7 D8 D1 D2

Mattagami Lake

HIGHWAY 144

MATTAGAMI INDIAN RESERVE NO. 71

Path: P:\EMProjects\2012\TC121522 IAMGOLD Cote Project\GIS\Terrestrial\MXD\2013_Baseline_Report_November2013\Bat_Survey_Locations_Page2_2.mxd, Author: SM, modified by monica.deveau, 28 November 2013

LEGEND

- Acoustic Bat Survey Location
- Potential Bat Roosting Location
- Bat Habitat Survey Location
- 320 m Proposed Transmission Line Setback
- 2 km Study Area
- Railway
- Roads
- Existing 115 kV Transmission Line

PROPOSED 230 kV TRANSMISSION LINE
- Cross-Country
- Shinningtree

ABANDONED MINES
- No Data
- Open Pit
- Trench
- Vertical Shaft
- Open Pit/Trench
- Open Pit/Rock Dump
- Vertical Shaft/Open Pit
- Vertical Shaft/Trench

CONSERVATION
- First Nation Reserve
- Conservation Reserve (Regulated)
- Provincial Park

RESIDENTIAL, TOURISM AND COTTAGES
- Cottage Residential Area
- Tourism Establishment Area

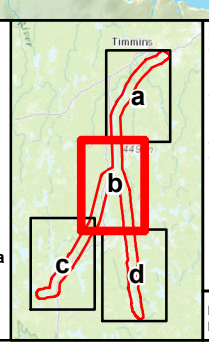

NOTES:
- Topographic data extraction from Land Information Ontario (Ministry of Natural Resourses)
- Abandoned mine information extracted from Ministry of Northern Development and Mines.
- Background extracted from ESRI
- Background imagery provided by IAMGOLD Corporation

Datum: NAD83
Projection: UTM Zone 17N

0 1 2 4 6 8 10 Kilometres

IAMGOLD CORPORATION amec

CÔTÉ GOLD PROJECT

Bat Habitat and Acoustic Survey Locations

PROJECT Nº: TC121522	**FIGURE: 2-4b**
SCALE: 1:104,000	DATE: November 2013

425000 430000 435000 440000 445000 450000

5295000 5290000 5285000 5280000 5275000 5270000 5265000

Bat 7f
Bat 7e
Bat 7a
D6
Bat 7d
Bat 7b
Bat 8f
Bat 7c
Bat 8e
Bat 8a
Bat 8d
Bat 8b
Bat 8c
HIGHWAY 144

Bat 26b
Bat 26a
Bat 25a
Bat 25b
Bat 25f
Bat 25c
Bat 26f
Bat 26c
Bat 25e
Bat 25d
Bat 26e
Bat 26d

Bat 5f
Bat 5e
Bat 5d
Bat 5a
Bat 5b
Bat 5c
Bat 6a
Bat 6b
Bat 6c
D5
Bat 6f
Bat 6e
Bat 6d
HIGHWAY 144

ROAD 402
215
403
106
2010
2011
JACK ROAD
370
386
HIGHWAY 144
HIGHWAY 110
HIGHWAY 651
LA MOTTE
Minisinakwa Lake
Mesomikenda Lake
Bagsverd Lake

00161
10067
00283
00226
00234
00368
00362
00340
00224

Path: P:\EMProjects\2012\TC121522 IAMGOLD Cote Project\GIS\Terrestrial\MXD\2013_Baseline_Report_November2013\Bat_Survey_Locations_Page3_2.mxd, Author: SM, modified by monica.deveau, 28 November 2013

LEGEND

- Acoustic Bat Survey Location
- Potential Bat Roosting Location
- Bat Habitat Survey Location
- 320 m Proposed Transmission Line Setback
- 2 km Study Area
- Railway
- Roads
- Existing 115 kV Transmission Line

PROPOSED 230 kV TRANSMISSION LINE
- Cross-Country
- Shinningtree

ABANDONED MINES
- No Data
- Open Pit
- Trench
- Vertical Shaft
- Open Pit/Trench
- Open Pit/Rock Dump
- Vertical Shaft/Open Pit
- Vertical Shaft/Trench

CONSERVATION
- First Nation Reserve
- Conservation Reserve (Regulated)
- Provincial Park

RESIDENTIAL, TOURISM AND COTTAGES
- Cottage Residential Area
- Tourism Establishment Area

0 1 2 4 6 8 10 Kilometres

Timmins
a
b
c
d

NOTES:
- Topographic data extraction from Land Information Ontario (Ministry of Natural Resourses)
- Abandoned mine information extracted from Ministry of Northern Development and Mines.
- Background extracted from ESRI
- Background imagery provided by IAMGOLD Corporation

Datum: NAD83
Projection: UTM Zone 17N

N W E S

IAMGOLD CORPORATION amec

CÔTÉ GOLD PROJECT

Bat Habitat and Acoustic Survey Locations

PROJECT N°: TC121522 | FIGURE: 2-4c

SCALE: 1:104,000 | DATE: November 2013

455000 460000 465000 470000 475000 480000

5295000 5290000 5285000 5280000 5275000 5270000 5265000 5260000

MATTAGAMI INDIAN RESERVE NO. 71

HIGHWAY 144

HIGHWAY 560

Bat 11f Bat 11d Bat 11e Bat 11c Bat 11a Bat 11b Bat 12c Bat 12a Bat 12b Bat 12d Bat 12f Bat 12e

Bat 28c Bat 28a Bat 28b Bat 28d Bat 28f Bat 28e Bat 27c Bat 27a Bat 27b Bat 27d Bat 27f Bat 27e

Bat 3e Bat 3d Bat 3c Bat 3b Bat 3a

Bat 29c Bat 29b Bat 29a Bat 29d Bat 29e Bat 29f Bat 30c Bat 30b Bat 30a Bat 30e Bat 30f Bat 30d

Bat 4a Bat 4b Bat 4c Bat 4f D3 Bat 4d Bat 4e

Path: P:\EMProjects\2012\TC121522 IAMGOLD Cote Project\GIS\TerrestrialMXD\2013_Baseline_Report_November2013\Bat_Survey_Locations_Page4_2.mxd, Author: SM, modified by monica.deveau, 29 November 2013

LEGEND

- Acoustic Bat Survey Location
- Potential Bat Roosting Location
- Bat Habitat Survey Location
- 320 m Proposed Transmission Line Setback
- 2 km Study Area
- Railway
- Roads
- Existing 115 kV Transmission Line

PROPOSED 230 kV TRANSMISSION LINE
- Cross-Country
- Shinningtree

ABANDONED MINES
- No Data
- Open Pit
- Trench
- Vertical Shaft
- Open Pit/Trench
- Open Pit/Rock Dump
- Vertical Shaft/Open Pit
- Vertical Shaft/Trench

CONSERVATION
- First Nation Reserve
- Conservation Reserve (Regulated)
- Provincial Park

RESIDENTIAL, TOURISM AND COTTAGES
- Cottage Residential Area
- Tourism Establishment Area

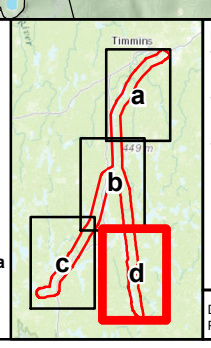

NOTES:
- Topographic data extraction from Land Information Ontario (Ministry of Natural Resourses)
- Abandoned mine information extracted from Ministry of Northern Development and Mines.
- Background imagery provided by IAMGOLD Corporation

Datum: NAD83
Projection: UTM Zone 17N

0 1 2 4 6 8 10 Kilometres

IAMGOLD CORPORATION amec

CÔTÉ GOLD PROJECT

Bat Habitat and Acoustic Survey Locations

PROJECT N°: TC121522 | FIGURE: 2-4d

SCALE: 1:104,000 | DATE: November 2013

420000 430000 440000 450000 460000 470000 480000 490000

5370000 5360000 5350000 5340000 5330000 5320000 5310000 5300000 5290000 5280000 5270000 5260000

CITY OF TIMMINS

GROUNDHOG RIVER WATERWAY

DANA-JOWSEY LAKES

Kenogamissi Lake

Mattagami Lake

MATTAGAMI R. 71

AKONESI CHAIN OF LAKES COMPLEX CONSERVATION RESERVE

LA MOTTE

GOGAMA

Sinclair Lake

GRASSY RIVER-MOND LAKE LOWLANDS AND FERRIS LAKE UPLANDS

MACMURCHY TOWNSHIP END MORAINE

Pebonishewi Lake

Mesomikenda Lake

Minisinakwa Lake

Bagsverd Lake

BISCOTASI LAKE



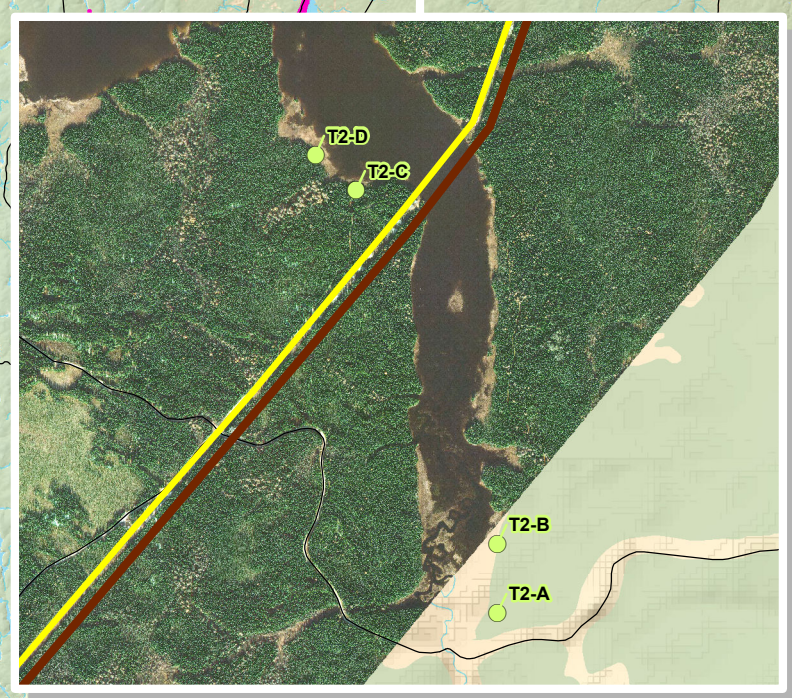

Path: P:\EM\Projects\2012\TC121522 IAMGOLD Cote Project\GIS\TerrestrialMXD\2013_Baseline_Report_November2013\Turtle_

LEGEND

- Turtle Survey Location
- 2 km Study Area
- Roads
- Railway
- Existing 115 kV Transmission Line

PROPOSED 230 kV TRANSMISSION LINE
- Cross-Country
- Shinningtree

CONSERVATION
- First Nation Reserve
- Conservation Reserve (Regulated)
- Provincial Park

RESIDENTIAL, TOURISM AND COTTAGES
- Cottage Residential Area
- Tourism Establishment Area

NOTES:
- Topographic data extraction from Land Information Ontario (Ministry of Natural Resourses)

Datum: NAD83
Projection: UTM Zone 17N

0 5 10 20 30 40 Kilometres

N W E S

IAMGOLD CORPORATION amec

CÔTÉ GOLD PROJECT

Basking Turtle Survey Locations

PROJECT N^{O}: TC121522	**FIGURE: 2-5**
SCALE: 1:325,000	DATE: November 2013

472000 474000 476000 478000 480000 482000

5370000 5368000 5366000 5364000 5362000 5360000 5358000 5356000 5354000

GOVERNMENT ROAD NORTH
SHIRLEY STREET NORTH
LAFLEUR DRIVE
SUZANNE STREET
VICTORIA AVENUE
BROUSSEAU AVENUE
ROSS AVENUE EAST
TEXAS GULF ROAD
CARUM ROAD
NINTH AVENUE
7TH AVENUE
5TH AVENUE
3RD AVENUE
1ST AVENUE
DALE AVENUE
LEE AVENUE
NORMAN STREET
PARK AVENUE
POWER AVENUE
RIVERSIDE DRIVE
CITY OF TIMMINS
VIPOND ROAD
BRUNDY AVENUE
GOLD MINE ROAD
DALTON ROAD
LUOMA ROAD
DELNITE ROAD
PINE STREET SOUTH

B088/ES7f
B055/ES3
B055/ES7c
B104/ES7m
B014/ES1r
B040/ES6c
B083/ES6f
B104/ES6m
B129/ES13r/cS
B136/lsF
B034/ES2
B224/ES9r/cS
B050/ES3
B127/ES11/cS
B142/B144/neM
B082/ES5f
B129/ES13p/cS

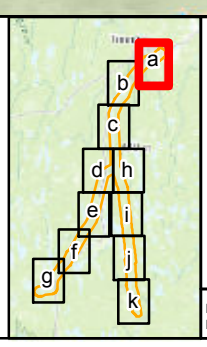

NOTES:
- Topographic data extraction from Land Information Ontario (Ministry of Natural Resourses)

* Vegetation communities area labelled with a combination of ELC, FEC and OWES. For detailed community description please refer to text.

LEGEND

- 2 km Study Area
- Existing 115 kV Transmission Line

PROPOSED 230 kV TRANSMISSION LINE
- Cross-Country
- Shinningtree

CONSERVATION
- First Nation Reserve
- Conservation Reserve (Regulated)
- Provincial Park

RESIDENTIAL, TOURISM AND COTTAGES
- Cottage Residential Area
- Tourism Establishment Area

VEGETATION COMMUNITIES*
- Water

Upland
- Coniferous Forest (B014/ES1r, B034/ES2, B039/ES19, B049/ES4, B050/ES3, B082/ES5f, B083/ES6f, B114/ES5m)
- Deciduous/Mixed Forest (B040/ES6c,B055/ES3, B055/ES7c, B058/ES15, B088/ES7f, B104/ES16, B104/ES6m, B104/ES7m)
- Other Communities (B044, B045, Anthropogenic)

Wetland (LIO Data)
- Deciduous Swamp (B130/ES10/dS)
- Coniferous Swamp (B127/ES11/cS, B128/ES12/cS, B129/ES13p/cS, 129/ES13r/cS, B137/ES14/cS, B222/ES8/cS, B223/ES9p/cS, B224/ES9r/cS)
- Tall Shrub Swamp (B134/B135/tsS)
- Low Shrub Fen (B136/lsF, B139/B140/lsF)
- Narrow Leaved Emergent Marsh (B142/B144/neM)
- Robust Emergent Marsh (B148/B149/reM)

Wetland (Ecosite Data)
- Deciduous Swamp (B130/ES10/dS)
- Coniferous Swamp (B127/ES11/cS, B128/ES12/cS, B129/ES13p/cS, B129/ES13r/cS, B137/ES14/cS, B222/ES8/cS, B223/ES9p/cS, B224/ES9r/cS)
- Tall Shrub Swamp (B134/B135/tsS)
- Low Shrub Fen (B136/lsF)
- Narrow Leaved Emergent Marsh (B142/B144/neM)

0 0.5 1 2 3 4 5 Kilometres

Datum: NAD83
Projection: UTM Zone 17N

N W E S

IAMGOLD CORPORATION amec

CÔTÉ GOLD PROJECT

Vegetation Communities

PROJECT N°: TC121522 | **FIGURE: 3-1a**

SCALE: 1:50,000 | DATE: November 2013

Path: P:\EMProjects\2012\TC121522 IAMGOLD Cote Project\GIS\Terrestrial\MXD\2013_Baseline_Report_November2013\Vegetation_Communities5.mxd, Author: SM, modified by monica.deveau, 29 November 2013

458000 460000 462000 464000 466000 468000 470000

5364000 5362000 5360000 5358000 5356000 5354000 5352000 5350000 5348000 5346000

WAFERBOARD ROAD

WAWATIN ROAD

Kenogamissi Lake

B049/ES4 B129/ES13p/cS B129/ES13r/cS B034/ES2 B055/ES3 B104/ES6m B082/ES5f B104/ES7m B050/ES3 B055/ES7c B040/ES6c B127/ES11/cS B083/ES6f B136/lsF B137/ES14/cS B223/ES9p/cS

Path: P:\EMProjects\2012\TC121522 IAMGOLD Cote Project\GIS\Terrestrial\MXD\2013_Baseline_Report_November2013\Vegetation_Communities5.mxd, Author: SM, modified by monica.deveau, 29 November 2013

LEGEND

- 2 km Study Area
- Existing 115 kV Transmission Line

PROPOSED 230 kV TRANSMISSION LINE

- Cross-Country
- Shinningtree

CONSERVATION

- First Nation Reserve
- Conservation Reserve (Regulated)
- Provincial Park

RESIDENTIAL, TOURISM AND COTTAGES

- Cottage Residential Area
- Tourism Establishment Area

VEGETATION COMMUNITIES*

- Water

Upland

- Coniferous Forest (B014/ES1r, B034/ES2, B039/ES19, B049/ES4, B050/ES3, B082/ES5f, B083/ES6f, B114/ES5m)
- Deciduous/Mixed Forest (B040/ES6c,B055/ES3, B055/ES7c, B058/ES15, B088/ES7f, B104/ES16, B104/ES6m, B104/ES7m)
- Other Communities (B044, B045, Anthropogenic)

Wetland (LIO Data)

- Deciduous Swamp (B130/ES10/dS)
- Coniferous Swamp (B127/ES11/cS, B128/ES12/cS, B129/ES13p/cS, 129/ES 13r/cS, B137/ES14/cS, B222/ES8/cS, B223/ES9p/cS, B224/ES9r/cS)
- Tall Shrub Swamp (B134/B135/tsS)
- Low Shrub Fen (B136/lsF, B139/B140/lsF)
- Narrow Leaved Emergent Marsh (B142/B144/neM)
- Robust Emergent Marsh (B148/B149/reM)

Wetland (Ecosite Data)

- Deciduous Swamp (B130/ES10/dS)
- Coniferous Swamp (B127/ES11/cS, B128/ES12/cS, B129/ES13p/cS, B129/ES13r/cS, B137/ES14/cS, B222/ES8/cS, B223/ES9p/cS, B224/ES9r/cS)
- Tall Shrub Swamp (B134/B135/tsS)
- Low Shrub Fen (B136/lsF)
- Narrow Leaved Emergent Marsh (B142/B144/neM)

a b c d e f g h i j k

NOTES:

- Topographic data extraction from Land Information Ontario (Ministry of Natural Resourses)

* Vegetation communities area labelled with a combination of ELC, FEC and OWES. For detailed community description please refer to text.

IAMGOLD® CORPORATION amec

CÔTÉ GOLD PROJECT

Vegetation Communities

Datum: NAD83
Projection: UTM Zone 17N

N W E S

0 0.5 1 2 3 4 5 Kilometres

PROJECT N°: TC121522	**FIGURE: 3-1b**
SCALE: 1:50,000	DATE: November 2013

454000 456000 458000 460000 462000 464000 466000

5344000 5342000 5340000 5338000 5336000 5334000 5332000 5330000 5328000

Kenogamissi Lake

Peterlong Lake

B055/ES3 B083/ES6f B127/ES11/cS B224/ES9r/cS B082/ES5f B055/ES7c B222/ES8/cS B129/ES13r/cS B050/ES3 B223/ES9p/cS B049/ES4 B129/ES13p/cS B034/ES2 B104/ES6m B104/ES7m B040/ES6c B136/lsF B088/ES7f

Path: P:\EMProjects\2012\TC121522 IAMGOLD Cote Project\GIS\Terrestrial\MXD\2013_Baseline_Report_November2013\Vegetation_Communities5.mxd, Author: SM, modified by monica.deveau, 29 November 2013

LEGEND

- 2 km Study Area
- Existing 115 kV Transmission Line

PROPOSED 230 kV TRANSMISSION LINE
- Cross-Country
- Shinningtree

CONSERVATION
- First Nation Reserve
- Conservation Reserve (Regulated)
- Provincial Park

RESIDENTIAL, TOURISM AND COTTAGES
- Cottage Residential Area
- Tourism Establishment Area

VEGETATION COMMUNITIES*
- Water

Upland
- Coniferous Forest (B014/ES1r, B034/ES2, B039/ES19, B049/ES4, B050/ES3, B082/ES5f, B083/ES6f, B114/ES5m)
- Deciduous/Mixed Forest (B040/ES6c,B055/ES3, B055/ES7c, B058/ES15, B088/ES7f, B104/ES16, B104/ES6m, B104/ES7m)
- Other Communities (B044, B045, Anthropogenic)

Wetland (LIO Data)
- Deciduous Swamp (B130/ES10/dS)
- Coniferous Swamp (B127/ES11/cS, B128/ES12/cS, B129/ES13p/cS, 129/ES 13r/cS, B137/ES14/cS, B222/ES8/cS, B223/ES9p/cS, B224/ES9r/cS)
- Tall Shrub Swamp (B134/B135/tsS)
- Low Shrub Fen (B136/lsF, B139/B140/lsF)
- Narrow Leaved Emergent Marsh (B142/B144/neM)
- Robust Emergent Marsh (B148/B149/reM)

Wetland (Ecosite Data)
- Deciduous Swamp (B130/ES10/dS)
- Coniferous Swamp (B127/ES11/cS, B128/ES12/cS, B129/ES13p/cS, B129/ES13r/cS, B137/ES14/cS, B222/ES8/cS, B223/ES9p/cS, B224/ES9r/cS)
- Tall Shrub Swamp (B134/B135/tsS)
- Low Shrub Fen (B136/lsF)
- Narrow Leaved Emergent Marsh (B142/B144/neM)

a b c d e f g h i j k

NOTES:
- Topographic data extraction from Land Information Ontario (Ministry of Natural Resourses)

* Vegetation communities area labelled with a combination of ELC, FEC and OWES. For detailed community description please refer to text.

Datum: NAD83
Projection: UTM Zone 17N

N W E S

0 0.5 1 2 3 4 5 Kilometres

IAMGOLD CORPORATION amec

CÔTÉ GOLD PROJECT

Vegetation Communities

PROJECT N°: TC121522 | **FIGURE: 3-1c**

SCALE: 1:50,000 | DATE: November 2013

448000 450000 452000 454000 456000 458000

5326000 5324000 5322000 5320000 5318000 5316000 5314000 5312000 5310000

B055/ES3 B224/ES9r/cS Kenogamissi Lake B104/ES7m B082/ES5f B127/ES11/cS B083/ES6f Mattagami Lake B049/ES4 B034/ES2 B114/ES5m B055/ES7c B129/ES13r/cS

Path: P:\EMProjects\2012\TC121522 IAMGOLD Cote Project\GIS\Terrestrial MXD\2013_Baseline_Report_November2013\Vegetation_Communities5.mxd, Author: SM, modified by monica.deveau, 29 November 2013

LEGEND

2 km Study Area
Existing 115 kV Transmission Line

PROPOSED 230 kV TRANSMISSION LINE
Cross-Country
Shinningtree

CONSERVATION
First Nation Reserve
Conservation Reserve (Regulated)
Provincial Park

RESIDENTIAL, TOURISM AND COTTAGES
Cottage Residential Area
Tourism Establishment Area

VEGETATION COMMUNITIES*
Water

Upland
Coniferous Forest
(B014/ES1r, B034/ES2, B039/ES19, B049/ES4, B050/ES3, B082/ES5f, B083/ES6f, B114/ES5m)
Deciduous/Mixed Forest
(B040/ES6c,B055/ES3, B055/ES7c, B058/ES15, B088/ES7f, B104/ES16, B104/ES6m, B104/ES7m)
Other Communities
(B044, B045, Anthropogenic)

Wetland (LIO Data)
Deciduous Swamp
(B130/ES10/dS)
Coniferous Swamp
(B127/ES11/cS, B128/ES12/cS, B129/ES13p/cS, 129/ES13r/cS, B137/ES14/cS, B222/ES8/cS, B223/ES9p/cS, B224/ES9r/cS)
Tall Shrub Swamp
(B134/B135/tsS)
Low Shrub Fen
(B136/lsF, B139/B140/lsF)
Narrow Leaved Emergent Marsh
(B142/B144/neM)
Robust Emergent Marsh
(B148/B149/reM)

Wetland (Ecosite Data)
Deciduous Swamp
(B130/ES10/dS)
Coniferous Swamp
(B127/ES11/cS, B128/ES12/cS, B129/ES13p/cS, B129/ES13r/cS, B137/ES14/cS, B222/ES8/cS, B223/ES9p/cS, B224/ES9r/cS)
Tall Shrub Swamp
(B134/B135/tsS)
Low Shrub Fen
(B136/lsF)
Narrow Leaved Emergent Marsh
(B142/B144/neM)

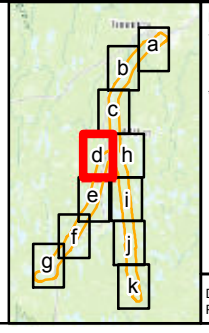

NOTES:
- Topographic data extraction from Land Information Ontario (Ministry of Natural Resourses)

* Vegetation communities area labelled with a combination of ELC, FEC and OWES. For detailed community description please refer to text.

0 0.5 1 2 3 4 5 Kilometres

Datum: NAD83
Projection: UTM Zone 17N

N W E S

IAMGOLD CORPORATION amec

CÔTÉ GOLD PROJECT

Vegetation Communities

PROJECT N°: TC121522	FIGURE: 3-1d
SCALE: 1:50,000	DATE: November 2013

446000 448000 450000 452000 454000 456000

5308000 5306000 5304000 5302000 5300000 5298000 5296000 5294000 5292000

MATTAGAMI INDIAN RESERVE NO. 71

B104/ES6m B055/ES3 B129/ES13p/cS B129/ES13r/cS B224/ES9r/cS B083/ES6f B136/lsF B127/ES11/cS B104/ES16 B224/ES9r/cS B222/ES8/cS B223/ES9p/cS B082/ES5f B039/ES19 B034/ES2 B049/ES4 B104/ES7m

Path: P:\EM\Projects\2012\TC121522 IAMGOLD Cote Project\GIS\Terrestrial\MXD\2013_Baseline_Report_November2013\Vegetation_Communities5.mxd, Author: SM, modified by monica.deveau, 29 November 2013

LEGEND

- 2 km Study Area
- Existing 115 kV Transmission Line

PROPOSED 230 kV TRANSMISSION LINE
- Cross-Country
- Shinningtree

CONSERVATION
- First Nation Reserve
- Conservation Reserve (Regulated)
- Provincial Park

RESIDENTIAL, TOURISM AND COTTAGES
- Cottage Residential Area
- Tourism Establishment Area

VEGETATION COMMUNITIES*
- Water

Upland
- Coniferous Forest (B014/ES1r, B034/ES2, B039/ES19, B049/ES4, B050/ES3, B082/ES5f, B083/ES6f, B114/ES5m)
- Deciduous/Mixed Forest (B040/ES6c,B055/ES3, B055/ES7c, B058/ES15, B088/ES7f, B104/ES16, B104/ES6m, B104/ES7m)
- Other Communities (B044, B045, Anthropogenic)

Wetland (LIO Data)
- Deciduous Swamp (B130/ES10/dS)
- Coniferous Swamp (B127/ES11/cS, B128/ES12/cS, B129/ES13p/cS, 129/ES 13r/cS, B137/ES14/cS, B222/ES8/cS, B223/ES9p/cS, B224/ES9r/cS)
- Tall Shrub Swamp (B134/B135/tsS)
- Low Shrub Fen (B136/lsF, B139/B140/lsF)
- Narrow Leaved Emergent Marsh (B142/B144/neM)
- Robust Emergent Marsh (B148/B149/reM)

Wetland (Ecosite Data)
- Deciduous Swamp (B130/ES10/dS)
- Coniferous Swamp (B127/ES11/cS, B128/ES12/cS, B129/ES13p/cS, B129/ES13r/cS, B137/ES14/cS, B222/ES8/cS, B223/ES9p/cS, B224/ES9r/cS)
- Tall Shrub Swamp (B134/B135/tsS)
- Low Shrub Fen (B136/lsF)
- Narrow Leaved Emergent Marsh (B142/B144/neM)

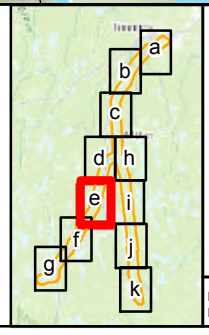

NOTES:
- Topographic data extraction from Land Information Ontario (Ministry of Natural Resourses)

* Vegetation communities area labelled with a combination of ELC, FEC and OWES. For detailed community description please refer to text.

0 0.5 1 2 3 4 5 Kilometres

Datum: NAD83
Projection: UTM Zone 17N

N W E S

IAMGOLD CORPORATION amec

CÔTÉ GOLD PROJECT

Vegetation Communities

PROJECT N°: TC121522 | **FIGURE: 3-1e**

SCALE: 1:50,000 | DATE: November 2013

438000 440000 442000 444000 446000 448000

5294000 5292000 5290000 5288000 5286000 5284000 5282000 5280000 5278000 5276000

AKONESI CHAIN OF LAKES COMPLEX CONSERVATION RESERVE

LA MOTTE

JACK ROAD

2011

HIGHWAY 110

HIGHWAY 144

HIGHWAY 661

ARTHUR STREET

MILLER STREET

Minisinakwa Lake

B055/ES3 B083/ES6f B104/ES16 B034/ES2 B049/ES4 B055/ES7c B104/ES7m B222/ES8/cS B129/ES13r/cS B040/ES6c B050/ES3 B127/ES11/cS B136/lSF B114/ES5m B082/ES5f B058/ES15 B142/B144/neM B129/ES13r/cS B139/B140/lsF B148/B149/reM B014/ES1r B039/ES19 B050/ES3 B082/ES5f B130/ES10/dS B127/ES11/cS B128/ES12/cS B129/ES13p/cS B137/ES14/cS B223/ES9p/cS B224/ES9r/cS B134/B135/tsS B136/lsF B142/B144/neM B044 B045

Path: P:\EMProjects\2012\TC121522 IAMGOLD Cote Project\GIS\Terrestrial\MXD\2013_Baseline_Report_November2013\Vegetation_Communities5.mxd, Author: SM, modified by monica.deveau, 29 November 2013

LEGEND

- 2 km Study Area
- Existing 115 kV Transmission Line

PROPOSED 230 kV TRANSMISSION LINE

- Cross-Country
- Shinningtree

CONSERVATION

- First Nation Reserve
- Conservation Reserve (Regulated)
- Provincial Park

RESIDENTIAL, TOURISM AND COTTAGES

- Cottage Residential Area
- Tourism Establishment Area

VEGETATION COMMUNITIES*

- Water

Upland

- Coniferous Forest (B014/ES1r, B034/ES2, B039/ES19, B049/ES4, B050/ES3, B082/ES5f, B083/ES6f, B114/ES5m)
- Deciduous/Mixed Forest (B040/ES6c,B055/ES3, B055/ES7c, B058/ES15, B088/ES7f, B104/ES16, B104/ES6m, B104/ES7m)
- Other Communities (B044, B045, Anthropogenic)

Wetland (LIO Data)

- Deciduous Swamp (B130/ES10/dS)
- Coniferous Swamp (B127/ES11/cS, B128/ES12/cS, B129/ES13p/cS, 129/ES13r/cS, B137/ES14/cS, B222/ES8/cS, B223/ES9p/cS, B224/ES9r/cS)
- Tall Shrub Swamp (B134/B135/tsS)
- Low Shrub Fen (B136/lsF, B139/B140/lsF)
- Narrow Leaved Emergent Marsh (B142/B144/neM)
- Robust Emergent Marsh (B148/B149/reM)

Wetland (Ecosite Data)

- Deciduous Swamp (B130/ES10/dS)
- Coniferous Swamp (B127/ES11/cS, B128/ES12/cS, B129/ES13p/cS, B129/ES13r/cS, B137/ES14/cS, B222/ES8/cS, B223/ES9p/cS, B224/ES9r/cS)
- Tall Shrub Swamp (B134/B135/tsS)
- Low Shrub Fen (B136/lsF)
- Narrow Leaved Emergent Marsh (B142/B144/neM)

a b c d e f g h i j k

NOTES:
- Topographic data extraction from Land Information Ontario (Ministry of Natural Resourses)

* Vegetation communities area labelled with a combination of ELC, FEC and OWES. For detailed community description please refer to text.

Datum: NAD83
Projection: UTM Zone 17N

N W E S

0 0.5 1 2 3 4 5 Kilometres

IAMGOLD CORPORATION amec

CÔTÉ GOLD PROJECT

Vegetation Communities

PROJECT N°: TC121522 | **FIGURE: 3-1f**

SCALE: 1:50,000 | DATE: November 2013

428000 430000 432000 434000 436000 438000

5280000 5278000 5276000 5274000 5272000 5270000 5268000 5266000 5264000

Mesomikenda Lake

Bagsverd Lake

B049/ES4 B129/ES13r/cS B083/ES6f B055/ES7c B040/ES6c B222/ES8/cS B055/ES3 B104/ES6m B224/ES9r/cS B136/lsF B139/B140/lsF B014/ES1r B034/ES2 B058/ES15 B114/ES5m B127/ES11/cS B129/ES13r/cS B222/ES8/cS

Path: P:\EMProjects\2012\TC121522 IAMGOLD Cote Project\GIS\Terrestrial\MXD\2013_Baseline_Report_November2013\Vegetation_Communities5.mxd, Author: SM, modified by monica.deveau, 29 November 2013

LEGEND

- 2 km Study Area
- Existing 115 kV Transmission Line

PROPOSED 230 kV TRANSMISSION LINE

- Cross-Country
- Shinningtree

CONSERVATION

- First Nation Reserve
- Conservation Reserve (Regulated)
- Provincial Park

RESIDENTIAL, TOURISM AND COTTAGES

- Cottage Residential Area
- Tourism Establishment Area

VEGETATION COMMUNITIES*

- Water

Upland

- Coniferous Forest (B014/ES1r, B034/ES2, B039/ES19, B049/ES4, B050/ES3, B082/ES5f, B083/ES6f, B114/ES5m)
- Deciduous/Mixed Forest (B040/ES6c,B055/ES3, B055/ES7c, B058/ES15, B088/ES7f, B104/ES16, B104/ES6m, B104/ES7m)
- Other Communities (B044, B045, Anthropogenic)

Wetland (LIO Data)

- Deciduous Swamp (B130/ES10/dS)
- Coniferous Swamp (B127/ES11/cS, B128/ES12/cS, B129/ES13p/cS, 129/ES13r/cS, B137/ES14/cS, B222/ES8/cS, B223/ES9p/cS, B224/ES9r/cS)
- Tall Shrub Swamp (B134/B135/tsS)
- Low Shrub Fen (B136/lsF, B139/B140/lsF)
- Narrow Leaved Emergent Marsh (B142/B144/neM)
- Robust Emergent Marsh (B148/B149/reM)

Wetland (Ecosite Data)

- Deciduous Swamp (B130/ES10/dS)
- Coniferous Swamp (B127/ES11/cS, B128/ES12/cS, B129/ES13p/cS, B129/ES13r/cS, B137/ES14/cS, B222/ES8/cS, B223/ES9p/cS, B224/ES9r/cS)
- Tall Shrub Swamp (B134/B135/tsS)
- Low Shrub Fen (B136/lsF)
- Narrow Leaved Emergent Marsh (B142/B144/neM)

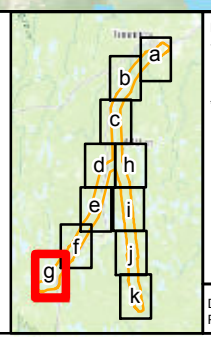

NOTES:
- Topographic data extraction from Land Information Ontario (Ministry of Natural Resourses)

* Vegetation communities area labelled with a combination of ELC, FEC and OWES. For detailed community description please refer to text.

0 0.5 1 2 3 4 5 Kilometres

Datum: NAD83
Projection: UTM Zone 17N

N W E S

IAMGOLD CORPORATION amec

CÔTÉ GOLD PROJECT

Vegetation Communities

PROJECT N°: TC121522 | **FIGURE: 3-1g**

SCALE: 1:50,000 | DATE: November 2013

460000 462000 464000 466000 468000 470000 472000

5326000 5324000 5322000 5320000 5318000 5316000 5314000 5312000 5310000

Kenogamissi

Peterlong Lake

B055/ES3 B224/ES9r/cS B129/ES13r/cS B083/ES6f B223/ES9p/cS B082/ES5f B127/ES11/cS B104/ES7m B224/ES9r/cS B104/ES6m B034/ES2 B050/ES3 B222/ES8/cS B136/lsF B055/ES7c B104/ES6m B129/ES13p/cS B083/ES6f B055/ES3

Path: P:\EMProjects\2012\TC121522 IAMGOLD Cote Project\GIS\Terrestrial\MXD\2013_Baseline_Report_November2013\Vegetation_Communities5.mxd, Author: SM, modified by monica.deveau, 29 November 2013

LEGEND

- 2 km Study Area
- Existing 115 kV Transmission Line

PROPOSED 230 kV TRANSMISSION LINE
- Cross-Country
- Shinningtree

CONSERVATION
- First Nation Reserve
- Conservation Reserve (Regulated)
- Provincial Park

RESIDENTIAL, TOURISM AND COTTAGES
- Cottage Residential Area
- Tourism Establishment Area

VEGETATION COMMUNITIES*
- Water

Upland
- Coniferous Forest (B014/ES1r, B034/ES2, B039/ES19, B049/ES4, B050/ES3, B082/ES5f, B083/ES6f, B114/ES5m)
- Deciduous/Mixed Forest (B040/ES6c,B055/ES3, B055/ES7c, B058/ES15, B088/ES7f, B104/ES16, B104/ES6m, B104/ES7m)
- Other Communities (B044, B045, Anthropogenic)

Wetland (LIO Data)
- Deciduous Swamp (B130/ES10/dS)
- Coniferous Swamp (B127/ES11/cS, B128/ES12/cS, B129/ES13p/cS, 129/ES 13r/cS, B137/ES14/cS, B222/ES8/cS, B223/ES9p/cS, B224/ES9r/cS)
- Tall Shrub Swamp (B134/B135/tsS)
- Low Shrub Fen (B136/lsF, B139/B140/lsF)
- Narrow Leaved Emergent Marsh (B142/B144/neM)
- Robust Emergent Marsh (B148/B149/reM)

Wetland (Ecosite Data)
- Deciduous Swamp (B130/ES10/dS)
- Coniferous Swamp (B127/ES11/cS, B128/ES12/cS, B129/ES13p/cS, B129/ES13r/cS, B137/ES14/cS, B222/ES8/cS, B223/ES9p/cS, B224/ES9r/cS)
- Tall Shrub Swamp (B134/B135/tsS)
- Low Shrub Fen (B136/lsF)
- Narrow Leaved Emergent Marsh (B142/B144/neM)

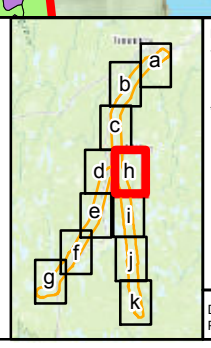

NOTES:
- Topographic data extraction from Land Information Ontario (Ministry of Natural Resourses)

* Vegetation communities area labelled with a combination of ELC, FEC and OWES. For detailed community description please refer to text.

Datum: NAD83
Projection: UTM Zone 17N

0 0.5 1 2 3 4 5 Kilometres

IAMGOLD CORPORATION amec

CÔTÉ GOLD PROJECT

Vegetation Communities

PROJECT N°: TC121522 | **FIGURE: 3-1h**

SCALE: 1:50,000 | DATE: November 2013

460000 462000 464000 466000 468000 470000

5308000 5306000 5304000 5302000 5300000 5298000 5296000 5294000 5292000

MATTAGAMI INDIAN RESERVE NO. 71

Mattagami Lake

Sinclair Lake

LEGEND

- 2 km Study Area
- Existing 115 kV Transmission Line

PROPOSED 230 kV TRANSMISSION LINE
- Cross-Country
- Shinningtree

CONSERVATION
- First Nation Reserve
- Conservation Reserve (Regulated)
- Provincial Park

RESIDENTIAL, TOURISM AND COTTAGES
- Cottage Residential Area
- Tourism Establishment Area

VEGETATION COMMUNITIES*
- Water

Upland
- Coniferous Forest (B014/ES1r, B034/ES2, B039/ES19, B049/ES4, B050/ES3, B082/ES5f, B083/ES6f, B114/ES5m)
- Deciduous/Mixed Forest (B040/ES6c,B055/ES3, B055/ES7c, B058/ES15, B088/ES7f, B104/ES16, B104/ES6m, B104/ES7m)
- Other Communities (B044, B045, Anthropogenic)

Wetland (LIO Data)
- Deciduous Swamp (B130/ES10/dS)
- Coniferous Swamp (B127/ES11/cS, B128/ES12/cS, B129/ES13p/cS, 129/ES13r/cS, B137/ES14/cS, B222/ES8/cS, B223/ES9p/cS, B224/ES9r/cS)
- Tall Shrub Swamp (B134/B135/tsS)
- Low Shrub Fen (B136/IsF, B139/B140/IsF)
- Narrow Leaved Emergent Marsh (B142/B144/neM)
- Robust Emergent Marsh (B148/B149/reM)

Wetland (Ecosite Data)
- Deciduous Swamp (B130/ES10/dS)
- Coniferous Swamp (B127/ES11/cS, B128/ES12/cS, B129/ES13p/cS, B129/ES13r/cS, B137/ES14/cS, B222/ES8/cS, B223/ES9p/cS, B224/ES9r/cS)
- Tall Shrub Swamp (B134/B135/tsS)
- Low Shrub Fen (B136/IsF)
- Narrow Leaved Emergent Marsh (B142/B144/neM)

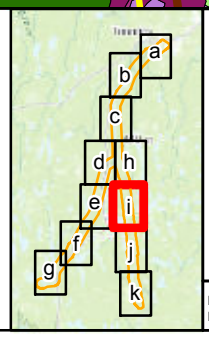

NOTES:
- Topographic data extraction from Land Information Ontario (Ministry of Natural Resourses)

* Vegetation communities area labelled with a combination of ELC, FEC and OWES. For detailed community description please refer to text.

Datum: NAD83
Projection: UTM Zone 17N

N W E S

0 0.5 1 2 3 4 5 Kilometres

IAMGOLD CORPORATION amec

CÔTÉ GOLD PROJECT

Vegetation Communities

PROJECT N°: TC121522 | FIGURE: 3-1i

SCALE: 1:50,000 | DATE: November 2013

Path: P:\EMProjects\2012\TC121522 IAMGOLD Cote Project\GIS\Terrestrial\MXD\2013_Baseline_Report_November2013\Vegetation_Communities5.mxd, Author: SM, modified by monica.deveau, 29 November 2013

460000 462000 464000 466000 468000 470000 472000

5290000 5288000 5286000 5284000 5282000 5280000 5278000 5276000 5274000

B049/ES4 B055/ES3 B104/ES7m B142/B144/neM B034/ES2 B082/ES5f B222/ES8/cS B136/lSF B134/B135/tsS B224/ES9r/cS B083/ES6f B128/ES12/cS

Path: P:\EM\Projects\2012\TC121522 IAMGOLD Cote Project\GIS\Terrestrial\MXD\2013_Baseline_Report_November2013\Vegetation_Communities5.mxd, Author: SM, modified by monica.deveau, 29 November 2013

LEGEND

- 2 km Study Area
- Existing 115 kV Transmission Line

PROPOSED 230 kV TRANSMISSION LINE
- Cross-Country
- Shinningtree

CONSERVATION
- First Nation Reserve
- Conservation Reserve (Regulated)
- Provincial Park

RESIDENTIAL, TOURISM AND COTTAGES
- Cottage Residential Area
- Tourism Establishment Area

VEGETATION COMMUNITIES*
- Water

Upland
- Coniferous Forest (B014/ES1r, B034/ES2, B039/ES19, B049/ES4, B050/ES3, B082/ES5f, B083/ES6f, B114/ES5m)
- Deciduous/Mixed Forest (B040/ES6c,B055/ES3, B055/ES7c, B058/ES15, B088/ES7f, B104/ES16, B104/ES6m, B104/ES7m)
- Other Communities (B044, B045, Anthropogenic)

Wetland (LIO Data)
- Deciduous Swamp (B130/ES10/dS)
- Coniferous Swamp (B127/ES11/cS, B128/ES12/cS, B129/ES13p/cS, 129/ES13r/cS, B137/ES14/cS, B222/ES8/cS, B223/ES9p/cS, B224/ES9r/cS)
- Tall Shrub Swamp (B134/B135/tsS)
- Low Shrub Fen (B136/lsF, B139/B140/lsF)
- Narrow Leaved Emergent Marsh (B142/B144/neM)
- Robust Emergent Marsh (B148/B149/reM)

Wetland (Ecosite Data)
- Deciduous Swamp (B130/ES10/dS)
- Coniferous Swamp (B127/ES11/cS, B128/ES12/cS, B129/ES13p/cS, B129/ES13r/cS, B137/ES14/cS, B222/ES8/cS, B223/ES9p/cS, B224/ES9r/cS)
- Tall Shrub Swamp (B134/B135/tsS)
- Low Shrub Fen (B136/lsF)
- Narrow Leaved Emergent Marsh (B142/B144/neM)

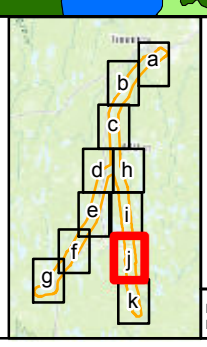

NOTES:
- Topographic data extraction from Land Information Ontario (Ministry of Natural Resourses)

* Vegetation communities area labelled with a combination of ELC, FEC and OWES. For detailed community description please refer to text.

0 0.5 1 2 3 4 5 Kilometres

Datum: NAD83
Projection: UTM Zone 17N

N W E S

IAMGOLD CORPORATION amec

CÔTÉ GOLD PROJECT

Vegetation Communities

PROJECT N°: TC121522	**FIGURE: 3-1j**
SCALE: 1:50,000	DATE: November 2013

462000 464000 466000 468000 470000 472000 474000

5272000 5270000 5268000 5266000 5264000 5262000 5260000 5258000 5256000

B034/ES2 B049/ES4 B104/ES7m B055/ES3 B083/ES6f B224/ES9r/cS B222/ES8/cS B082/ES5f B136/lsF

Path: P:\EMProjects\2012\TC121522 IAMGOLD Cote Project\GIS\Terrestrial\MXD\2013_Baseline_Report_November2013\Vegetation_Communities5.mxd, Author: SM, modified by monica.deveau, 29 November 2013

LEGEND

- 2 km Study Area
- Existing 115 kV Transmission Line

PROPOSED 230 kV TRANSMISSION LINE
- Cross-Country
- Shinningtree

CONSERVATION
- First Nation Reserve
- Conservation Reserve (Regulated)
- Provincial Park

RESIDENTIAL, TOURISM AND COTTAGES
- Cottage Residential Area
- Tourism Establishment Area

VEGETATION COMMUNITIES*
- Water

Upland
- Coniferous Forest (B014/ES1r, B034/ES2, B039/ES19, B049/ES4, B050/ES3, B082/ES5f, B083/ES6f, B114/ES5m)
- Deciduous/Mixed Forest (B040/ES6c,B055/ES3, B055/ES7c, B058/ES15, B088/ES7f, B104/ES16, B104/ES6m, B104/ES7m)
- Other Communities (B044, B045, Anthropogenic)

Wetland (LIO Data)
- Deciduous Swamp (B130/ES10/dS)
- Coniferous Swamp (B127/ES11/cS, B128/ES12/cS, B129/ES13p/cS, 129/ES13r/cS, B137/ES14/cS, B222/ES8/cS, B223/ES9p/cS, B224/ES9r/cS)
- Tall Shrub Swamp (B134/B135/tsS)
- Low Shrub Fen (B136/lsF, B139/B140/lsF)
- Narrow Leaved Emergent Marsh (B142/B144/neM)
- Robust Emergent Marsh (B148/B149/reM)

Wetland (Ecosite Data)
- Deciduous Swamp (B130/ES10/dS)
- Coniferous Swamp (B127/ES11/cS, B128/ES12/cS, B129/ES13p/cS, B129/ES13r/cS, B137/ES14/cS, B222/ES8/cS, B223/ES9p/cS, B224/ES9r/cS)
- Tall Shrub Swamp (B134/B135/tsS)
- Low Shrub Fen (B136/lsF)
- Narrow Leaved Emergent Marsh (B142/B144/neM)

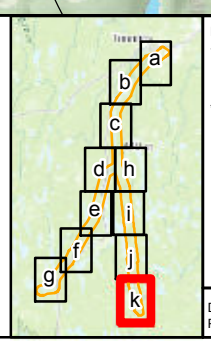

NOTES:
- Topographic data extraction from Land Information Ontario (Ministry of Natural Resourses)

* Vegetation communities area labelled with a combination of ELC, FEC and OWES. For detailed community description please refer to text.

0 0.5 1 2 3 4 5 Kilometres

Datum: NAD83
Projection: UTM Zone 17N

N W E S

IAMGOLD CORPORATION amec

CÔTÉ GOLD PROJECT

Vegetation Communities

PROJECT N°: TC121522	**FIGURE: 3-1k**
SCALE: 1:50,000	DATE: November 2013

425000 450000 475000 500000

5375000 5350000 5325000 5300000 5275000

CITY OF TIMMINS
GROUNDHOG RIVER WATERWAY
DANA-JOWSEY LAKES
Kenogamissi Lake
Peterlong Lake
Mattagami Lake
MATTAGAMI IR. 71
Sinclair Lake
AKONESI CHAIN OF LAKES COMPLEX CONSERVATION RESERVE
LA MOTTE
GOGAMA
Minisinakwa Lake
Mesomikenda Lake
Pebonishewi Lake
Bagsverd Lake
BISCOTASI LAKE
GRASSY RIVER-MOND LAKE LOWLANDS AND FERRIS LAKE UPLANDS
MACMURCHY TOWNSHIP END MORAINE

Path: P:\EM\Projects\2012\TC121522 IAMGOLD Cote Project\GIS\Terrestrial\MXD\2013_Baseline_Report_November2013\Nests_and_Birds_042013.mxd, Author: SM, modified by monica.deveau, 29 November 2013

LEGEND

- Project Site Location
- Cross-Country TL Flight Line
- Shiningtree TL Flight Line
- Railway
- Roads

RESIDENTIAL, TOURISM AND COTTAGES

- Cottage Residential Area
- Tourism Establishment Area

CONSERVATION

- First Nation Reserve
- Conservation Reserve (Regulated)
- Provincial Park

SIGHTING*

- Winter 2013
- Spring 2013

NESTS

- Active
- Inactive

SPECIES

- Bald Eagle
- Great Blue Heron
- Great Grey Owl
- Merlin
- Northern Harrier
- Raven
- Red-tailed Hawk
- Sandhill Crane
- Turkey Vulture
- Sharp-shinned Hawk
- Hawk Sp.
- Osprey or Eagle

*All sighting are labeled with the number of individuals observed.

NOTES:
- Topographic data extraction from Land Information Ontario (Ministry of Natural Resourses)

Datum: NAD83
Projection: UTM Zone 17N

0 5 10 20 30 40 Kilometres

IAMGOLD® CORPORATION amec

CÔTÉ GOLD PROJECT

Aerial Survey Results for Raptors

PROJECT N°: TC121522 | FIGURE: 3-2

SCALE: 1:325,000 | DATE: November 2013

425000 450000 475000 500000

5375000 5350000 5325000 5300000 5275000

CITY OF TIMMINS
GROUNDHOG RIVER WATERWAY
DANA-JOWSEY LAKES
Kenogamissi Lake
Peterlong Lake
Mattagami Lake
MATTAGAMI IR. 71
Sinclair Lake
AKONESI CHAIN OF LAKES COMPLEX CONSERVATION RESERVE
LA MOTTE
GROSSY RIVER-MOND LAKE LOWLANDS AND FERRIS LAKE UPLANDS
Pebonishewi Lake
Minisinakwa Lake
GOGAMA
Mesomikenda Lake
MACMURCHY TOWNSHIP END MORAINE
Bagsverd Lake
BISCOTASI LAKE

1 4 7 7 1 1 1

Path: P:\EM\Projects\2012\TC121522 IAMGOLD Cote Project\GIS\Terrestrial\MXD\2013_Baseline_Report_November2013\Moose_2013.mxd, Author: SM, modified by monica.deveau, 29 November 2013

LEGEND
- Project Site Location
- Cross-Country TL Flight Line
- Shiningtree TL Flight Line
- Railway
- Roads
- Approximate Moose Wintering Area
- Approximate Moose Aquatic Feeding Area

CONSERVATION
- First Nation Reserve
- Conservation Reserve (Regulated)
- Provincial Park

RESIDENTIAL, TOURISM AND COTTAGES
- Cottage Residential Area
- Tourism Establishment Area

SPECIES
- Moose

SIGHTING*
- Winter 2013
- Spring 2013

TRACK DENSITY
(Winter 2013)
- High
- Medium
- Low

(Spring 2013)
- High
- Low

*All sightings are labeled with the number of individuals observed.

0 5 10 20 30 40 Kilometres

NOTES:
- Topographic data extraction from Land Information Ontario (Ministry of Natural Resourses)

Datum: NAD83
Projection: UTM Zone 17N

N W E S

IAMGOLD® CORPORATION amec

CÔTÉ GOLD PROJECT

Aerial Survey Results for Moose

PROJECT N°: TC121522 | **FIGURE: 3-3**

SCALE: 1:325,000 | DATE: November 2013

425000 450000 475000 500000

5375000 5350000 5325000 5300000 5275000

CITY OF TIMMINS

GROUNDHOG RIVER WATERWAY

DANA-JOWSEY LAKES

Kenogamissi Lake

Peterlong Lake

Mattagami Lake

MATTAGAMI IR. 71

Sinclair Lake

GRASSY RIVER-MOND LAKE LOWLANDS AND FERRIS LAKE UPLANDS

AKONESI CHAIN OF LAKES COMPLEX CONSERVATION RESERVE

LA MOTTE

Pebonishewi Lake

Minisinakwa Lake

GOGAMA

Mesomikenda Lake

Bagsverd Lake

MACMURCHY TOWNSHIP END MORAINE

BISCOTASI LAKE

Path: P:\EM\Projects\2012\TC121522 IAMGOLD Cote Project\GIS\Terrestrial\MXD\2013_Baseline_Report_November2013\Potential_Habitat_042013.mxd, Author: SM, modified by monica.deveau, 29 November 2013

LEGEND

- Project Site Location
- Cross-Country TL Flight Line
- Shiningtree TL Flight Line
- Railway
- Roads
- Clear-cut - Small
- Clear-cut - Medium
- Clear-cut - Large
- Clear-cut - Very Large
- Burned Area
- Regeneration Block - Small
- Regeneration Block - Medium
- Regeneration Block - Large
- Regeneration Block - Very Large

CONSERVATION

- First Nation Reserve
- Conservation Reserve (Regulated)
- Provincial Park

RESIDENTIAL, TOURISM AND COTTAGES

- Cottage Residential Area
- Tourism Establishment Area

NOTES:
- Topographic data extraction from Land Information Ontario (Ministry of Natural Resourses)

Datum: NAD83
Projection: UTM Zone 17N

0 5 10 20 30 40 Kilometres

IAMGOLD CORPORATION amec

CÔTÉ GOLD PROJECT

Aerial Survey Results
Observed Clear-cut and Regeneration Areas

PROJECT N°: TC121522 | **FIGURE: 3-4**

SCALE: 1:325,000 | DATE: November 2013

425000 450000 475000 500000

5375000 5350000 5325000 5300000 5275000

CITY OF TIMMINS

GROUNDHOG RIVER WATERWAY

DANA-JOWSEY LAKES

Kenogamissi Lake

Peterlong Lake

Mattagami Lake

MATTAGAMI IR. 71

Sinclair Lake

GRASSY RIVER-MOND LAKE LOWLANDS AND FERRIS LAKE UPLANDS

AKONESI CHAIN OF LAKES COMPLEX CONSERVATION RESERVE

LA MOTTE

Pebonishewi Lake

Minisinakwa Lake

GOGAMA

Mesomikenda Lake

Bagsverd Lake

MACMURCHY TOWNSHIP END MORAINE

BISCOTASI LAKE

1 3 3 2 15 2 2

Path: P:\EM\Projects\2012\TC121522 IAMGOLD Cote Project\GIS\Terrestrial\MXD\2013_Baseline_Report_November2013\Bear_2013.mxd, Author: SM, modified by monica.deveau, 29 November 2013

LEGEND

- Project Site Location
- Cross-Country TL Flight Line
- Shiningtree TL Flight Line
- Railway
- Roads

RESIDENTIAL, TOURISM AND COTTAGES

- Cottage Residential Area
- Tourism Establishment Area

CONSERVATION

- First Nation Reserve
- Conservation Reserve (Regulated)
- Provincial Park

SPECIES

- Black Bear

TRACK DENSITY (Spring 2013)

- Low

SIGHTING*

- Spring 2013

BEAR HABITAT

- Bear "Nest" (Clusters are labeled with the number of "nests" observed)
- Black Bear Den

*All sighting are labeled with the number of individuals observed.

NOTES:
- Topographic data extraction from Land Information Ontario (Ministry of Natural Resourses)

Datum: NAD83
Projection: UTM Zone 17N

0 5 10 20 30 40 Kilometres

IAMGOLD® CORPORATION amec

CÔTÉ GOLD PROJECT

Aerial Survey Results for Black Bear

PROJECT N°: TC121522 | **FIGURE: 3-5**

SCALE: 1:325,000 | DATE: November 2013

425000 450000 475000 500000

5375000 5350000 5325000 5300000 5275000

CITY OF TIMMINS
GROUNDHOG RIVER WATERWAY
DANA-JOWSEY LAKES
Kenogamissi Lake
Peterlong Lake
Mattagami Lake
MATTAGAMI IR. 71
Sinclair Lake
AKONESI CHAIN OF LAKES COMPLEX CONSERVATION RESERVE
LA MOTTE
GRASSY RIVER-MOND LAKE LOWLANDS AND FERRIS LAKE UPLANDS
Pebonishewi Lake
Minisinakwa Lake
GOGAMA
Mesomikenda Lake
MACMURCHY TOWNSHIP END MORAINE
Bagsverd Lake
BISCOTASI LAKE

Path: P:\EM\Projects\2012\TC121522 IAMGOLD Cote Project\GIS\Terrestrial\MXD\2013_Baseline_Report_November2013\Deer_and_Wolf_2013.mxd, Author: SM, modified by monica.deveau, 29 November 2013

LEGEND
- Project Site Location
- Cross-Country TL Flight Line
- Shiningtree TL Flight Line
- Railway
- Roads

RESIDENTIAL, TOURISM AND COTTAGES
- Cottage Residential Area
- Tourism Establishment Area

CONSERVATION
- First Nation Reserve
- Conservation Reserve (Regulated)
- Provincial Park

SPECIES
- White-tailed Deer
- Wolf

TRACK DENSITY
(Winter 2013)
- Medium
- Low

(Spring 2013)
- Medium
- Low

NOTES:
- Topographic data extraction from Land Information Ontario (Ministry of Natural Resourses)

Datum: NAD83
Projection: UTM Zone 17N

0 5 10 20 30 40 Kilometres

IAMGOLD CORPORATION amec

CÔTÉ GOLD PROJECT

Aerial Survey Results for White-tailed Deer and Wolf

PROJECT N°: TC121522 | **FIGURE: 3-6**

SCALE: 1:325,000 | DATE: November 2013

460000 470000 480000

5370000 5360000 5350000 5340000 5330000

CIT OF TIMMINS

1

Kenogamissi Lake

Path: P:\EMProjects\2012\TC121522 IAMGOLD Cote Project\GIS\Terrestrial\MXD\2013_Baseline_Report_November2013\Other_Mammals_Common_2013.mxd, Author: SM, modified by monica.deveau, 29 November 2013

LEGEND

- Project Site Location
- Cross-Country TL Flight Line
- Common Flight Line
- Railway
- Roads

RESIDENTIAL, TOURISM AND COTTAGES

- Cottage Residential Area
- Tourism Establishment Area

CONSERVATION

- First Nation Reserve
- Conservation Reserve (Regulated)
- Provincial Park

SPECIES

- Red Fox
- Lynx
- Marten
- Mink
- Mustelid Species
- River Otter
- Porcupine
- Weasel

TRACK DENSITY (Winter 2013)

- High
- Low

(Spring 2013)

- Low

SIGHTING*

- Winter 2013
- Spring 2013

*Sightings are labeled with the number of individuals observed

NOTES:
- Topographic data extraction from Land Information Ontario (Ministry of Natural Resourses)

Datum: NAD83
Projection: UTM Zone 17N

0 2 4 8 12 16 Kilometres

N W E S

IAMGOLD® CORPORATION amec

CÔTÉ GOLD PROJECT

Aerial Survey Results for Other Mammals

PROJECT N°: TC121522 | **FIGURE: 3-7a**

SCALE: 1:125,000 | DATE: November 2013

430000 440000 450000 460000 470000

5330000 5320000 5310000 5300000 5290000 5280000 5270000 5260000

Peterlong Lake

Mattagami Lake

Sinclair Lake

AKONESI CHAIN OF LAKES COMPLEX CONSERVATION RESERVE

LA MOTTE

GOGAMA

Mesomikenda Lake

Minisinakwa Lake

Bagsverd Lake

Path: P:\EM\Projects\2012\TC121522 IAMGOLD Cote Project\GIS\Terrestrial\MXD\2013_Baseline_Report_November2013\Other_Mammals_CrossCountry_ShiningTree_2013.mxd, Author: SM, modified by monica.deveau, 29 November 2013

LEGEND

- Project Site Location
- Cross-Country TL Flight Line
- Common Flight Line
- Railway
- Roads

RESIDENTIAL, TOURISM AND COTTAGES

- Cottage Residential Area
- Tourism Establishment Area

CONSERVATION

- First Nation Reserve
- Conservation Reserve (Regulated)
- Provincial Park

SPECIES

- Red Fox
- Lynx
- Marten
- Mink
- Mustelid Species
- River Otter
- Porcupine
- Weasel

TRACK DENSITY

(Winter 2013)
- High
- Low

(Spring 2013)
- Low

SIGHTING*

- Winter 2013
- Spring 2013

*Sightings are labeled with the number of individuals observed

NOTES:
- Topographic data extraction from Land Information Ontario (Ministry of Natural Resourses)

Datum: NAD83
Projection: UTM Zone 17N

0 3.25 6.5 13 19.5 26 Kilometres

N W E S

IAMGOLD® CORPORATION amec

CÔTÉ GOLD PROJECT

Aerial Survey Results for Other Mammals

PROJECT N°: TC121522 | **FIGURE: 3-7b**

SCALE: 1:205,000 | DATE: November 2013

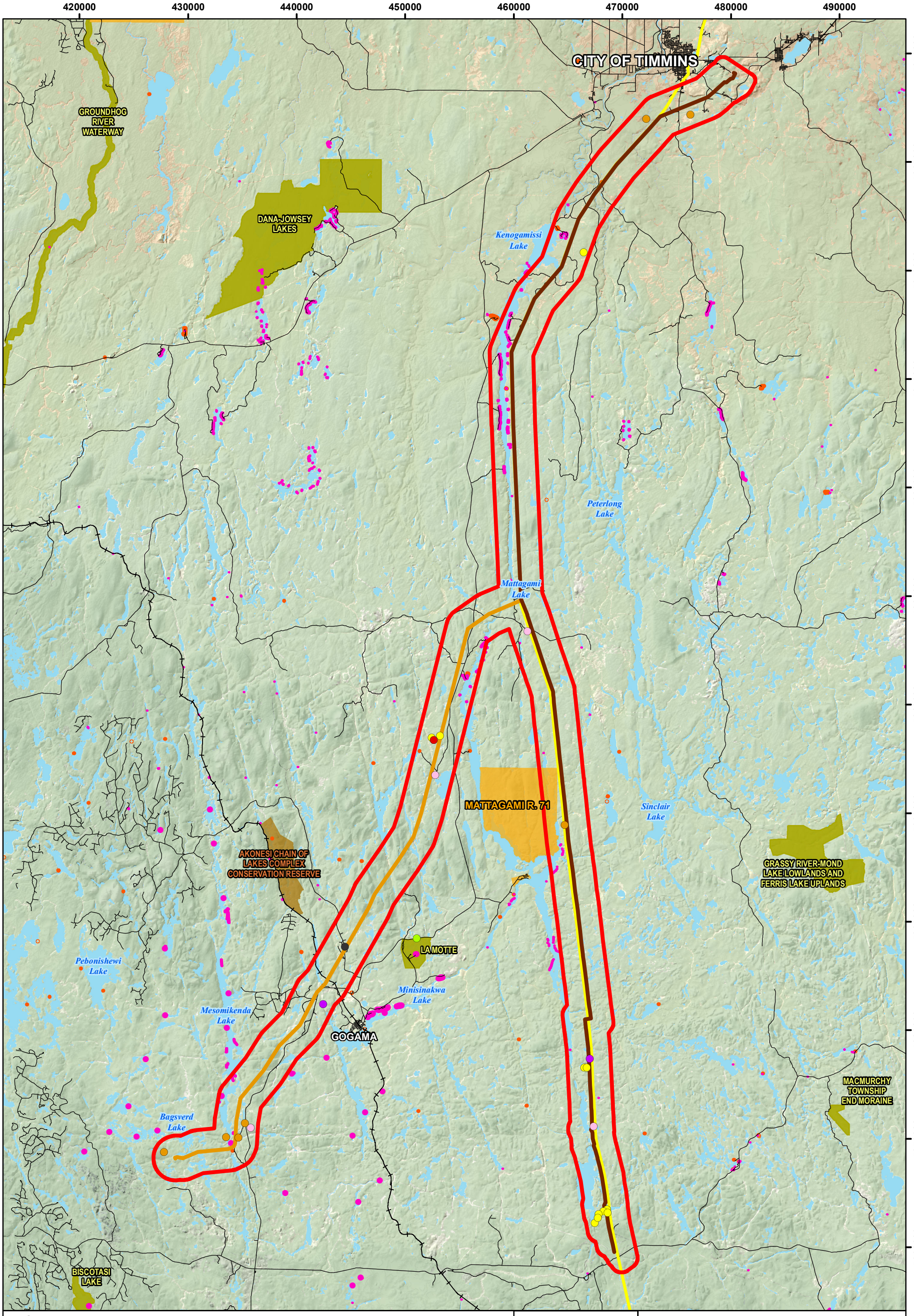

Path: P:\EM\Projects\2012\TC121522 IAMGOLD Cote Project\GIS\Terrestrial\MXD\2013_Baseline_Report_November2013\SAR_Locations.mxd, Author: , modified by monica.deveau, 29 November 2013

LEGEND

- 2 km Study Area
- Roads
- Railway
- Existing 115 kV Transmission Line

PROPOSED 230 kV TRANSMISSION LINE
- Cross-Country
- Shinningtree

CONSERVATION
- First Nation Reserve
- Conservation Reserve (Regulated)
- Provincial Park

RESIDENTIAL, TOURISM AND COTTAGES
- Cottage Residential Area
- Tourism Establishment Area

SPECIES AT RISK OBSERVATIONS
- Canada Warbler
- Common Nighthawk
- Little Brown Myotis
- Olive-sided Flycatcher
- Rusty Blackbird
- Snapping Turtle
- Bald Eagle

NOTES:
- Topographic data extraction from Land Information Ontario (Ministry of Natural Resourses)
- All Bald Eagle Sightings were collected during aerial surveys (March and April 2013)

Datum: NAD83
Projection: UTM Zone 17N

0 5 10 20 30 40 Kilometres

IAMGOLD CORPORATION amec

CÔTÉ GOLD PROJECT

Species At Risk Observations

PROJECT N°: TC121522 | **FIGURE: 3-8**

SCALE: 1:325,000 | DATE: November 2013

APPENDIX I

DETAILS OF FIELD SURVEYS UNDERTAKEN IN 2013

Appendix I: Details of Field Surveys Undertaken in 2013

Date (2013)	Surveyors[1]	Survey Type	Time (hours)	Weather			
				Temp. (°C)	Cloud Cover (%)	Wind[2]	Precip.[3]
February 27	ME, JP	Aerial Mammal Tracking and Raptor Stick Nest	09:15 – 16:15	-4	Calm, thin clouds	4*	0*
February 28	ME, JP	Aerial Mammal Tracking and Raptor Stick Nest	09:10 – 15:31	-12	Overcast	4*	snow
March 1	ME, JP	Aerial Mammal Tracking and Raptor Stick Nest	09:01 – 13:28	-20	Overcast	Windy	snow
April 16	ME, JP, IK	Aerial Mammal Tracking and Raptor Stick Nest	09:30 – 15:05	3*	Overcast	breezy	0*
April 17	ME, JP, IK	Aerial Mammal Tracking and Raptor Stick Nest	08:42 – 14:55	-5*	Clear/ Sunny	2*	0*
May 28	JP, JJ	Crepuscular Birds Survey	21:15 – 23:51	17*	Mostly Cloudy	2*	0*
May 29	JP, JJ	Breeding Bird Point Counts	09:30 – 10:10	14	100	0 – 1	2 - 3
May 29	JP, JB, JJ	Crepuscular Birds Survey	21:20 – 00:59	16*	Mainly Clear	2*	0*
May 29 – 30	JJ	Bat Acoustic Survey	20:45 – 06:00	11.8 – 16.4	Partially Cloudy	2 – 3*	0
May 30	JB, JP	Breeding Bird Point Counts	05:20 – 10:45	10	0	0 – 1	0 - 3
May 30	JP, JB	Crepuscular Birds Survey	21:14 – 23:42	17.5 – 18.5*	20	1	0
May 30 – 31	JJ	Bat Acoustic Survey	20:45 – 06:00	15.7 – 18.5*	Cloudy	2*	1
May 31	JB	Breeding Bird Point Counts	05:26 – 10:32	16*	Some clouds	1 - 2	0
May 31	JJ, IK	Vegetation Inventory, Community Mapping, Bat Habitat Analysis	08:00 – 18:00	20.5 – 26.8*	Mostly Cloudy	2 – 4*	0
May 31 – June 1	JJ	Bat Acoustic Survey	20:45 – 06:00	12.9 – 15.0*	Cloudy	0 – 2*	1
June 1	JB, JP	Breeding Bird Point Counts	05:35 – 11:16	13*	30	1	0
June 1	JJ, IK	Vegetation Inventory, Community Mapping	08:00 – 18:00	14.7 – 20.2*	Cloudy	1 – 4*	1 – 4
June 1 – 2	JJ	Bat Acoustic Survey	20:45 – 06:00	5.5 – 11.3A*	Cloudy	1 – 5*	1 - 2
June 2	JB, JP	Breeding Bird Point Counts	05:38 – 10:17	6*	100	1 - 3	0 - 2
June 2	JJ, IK	Bat Habitat Analysis	08:00 – 18:00	5.0 – 5.5*	Cloudy	5*	1 – 4
June 2-3	JJ	Bat Acoustic Survey	20:45 – 06:00	2.0 - 3.6*	Cloudy	4 – 5*	4

Date (2013)	Surveyors[1]	Survey Type	Time (hours)	Weather			
				Temp. (°C)	Cloud Cover (%)	Wind[2]	Precip.[3]
June 3	JB, JP	Breeding Bird Point Counts	05:25 – 06:53	4	90	1 - 3	0 - 2
June 3	JJ, IK	Bat Habitat Analysis	08:00 – 18:00	0.8 – 5.4*	Cloudy	5 - 7*	1 – 4, snow
June 3 – 4	JJ	Bat Acoustic Survey	20:45 – 06:00	4.8 – 5.1*	Mainly Clear	3 – 5*	0
June 4	JB, LL	Breeding Bird Point Counts	05:05 – 10:09	5	Clear	1 - 2	0
June 4	IK, SM	Bat Habitat Analysis	08:00 – 18:00	0.7 – 5.1*	Clear	3 – 5*	0
June 4 – 5	JJ	Bat Acoustic Survey	20:45 – 06:00	-2.2 – 5.3*	Clear	1 – 3*	0
June 5	IK, SM	Bat Habitat Analysis	08:00 – 18:00	7.6 – 17.7*	Mostly Cloudy*	1 – 4*	0
June 5 – 6	JJ	Bat Acoustic Survey	20:45 – 06:00	11.5 – 2.8*	Clear	1 – 3	0
June 6	IK, SM	Vegetation Inventory, Community Mapping, Bat Habitat Analysis	08:00 – 18:00	14.0 – 20.5*	Clear	3 – 6*	0
June 7	IK, SM	Vegetation Inventory, Community Mapping, Bat Habitat Analysis	08:00 – 18:00	15.5 – 23.6*	Clear	3 – 5*	0
June 7	JP	Crepuscular Bird Survey	21:09 – 23:01	8.2 – 12.2	30	0	0
June 8	JP	Breeding Bird Point Counts	05:15 – 09:39	6	0	0	0
June 8	IK, SM	Vegetation Inventory, Community Mapping, Bat Habitat Analysis	08:00 – 18:00	16.3 – 24.8*	Mainly Clear*	1 – 4*	0
June 8	JP	Crepuscular Bird Survey	20:57 – 23:09	19*	10	3*	0
June 9	JP	Breeding Bird Point Counts	05:25 – 10:45	7*	0	3	0
June 9	IK, SM	Vegetation Inventory, Community Mapping, Bat Habitat Analysis	08:00 – 18:00	17.7 – 27.2*	Mainly Clear*	3 – 5*	0
June 10	JP	Breeding Bird Point Counts	05:30 – 09:35	11*	Mainly Clear	1	0
June 10	IK, SM	Vegetation Inventory, Community Mapping, Bat Habitat Analysis	08:00 – 18:00	15.6 – 26.2*	Mostly Cloudy	2 – 6*	0
June 11	JP, SM	Breeding Bird Point Counts	05:00 – 11:30	15	50 - 100	0	0
June 11	IK, SM	Vegetation Inventory, Community Mapping, Bat Habitat Analysis	08:00 – 18:00	16.3 – 20.8*	Mostly Cloudy	2 – 5*	0
June 12	JP, SKM	Breeding Bird Point Counts	08:00 – 12:00	15.7 – 20.4*	Clear	1 – 3*	1
June 12	IK, SM	Vegetation Inventory, Community Mapping, Bat Habitat Analysis	08:00 – 18:00	15.7 – 20.8*	Cloudy	1 – 5*	4
June 13	JP, SKM	Breeding Bird Point Counts	05:30 – 12:15	15	100	0 - 3	0 - 1

Date (2013)	Surveyors[1]	Survey Type	Time (hours)	Weather			
				Temp. (°C)	Cloud Cover (%)	Wind[2]	Precip.[3]
June 13	IK, SM	Vegetation Inventory, Community Mapping, Bat Habitat Analysis	08:00 – 18:00	10.2 – 17.9*	Cloudy	4 – 6*	1 – 2
June 14	JB, JP, SKM	Breeding Bird Point Counts	04:45 – 10:45	10	0	1 - 2	0
June 14	IK, SM	Vegetation Inventory, Community Mapping, Bat Habitat Analysis	08:00 – 18:00	10.3 – 20.6*	Mainly Clear	1 – 4	None
June 15	JB, SKM	Breeding Bird Point Counts	05:14 – 10:33	15	clear	0 - 2	0
June 15	IK, SM	Vegetation Inventory, Community Mapping, Bat Habitat Analysis	08:00 – 18:00	14.4 – 20.1*	Mostly Cloudy*	3 – 5*	0
June 16	JB, SKM	Breeding Bird Point Counts	05:29 - 08:23	12	20	1 - 2	0
June 18	JB, ME	Crepuscular Bird	21:20 – 24:00	15	Clear	1	0
June 19	ME	Marsh Bird/Basking Turtle Survey	07:00 – 10:05	15	Clear	0	0
June 19	ME	Crepuscular Bird	21:00 – 1:45	18	Clear	0	0
June 20	ME	Marsh Bird/Basking Turtle Survey	07:40 – 09:55	15	Clear	0	0
June 20	ME	Crepuscular Bird	21:30 – 1:04	18	Partially Cloudy	0	0
June 22	ME	Crepuscular Bird	21:30 – 1:04	16	Clear	0	0
August 29	JJ, HM	Bat Hibernacula Survey	08:00 – 23:00	22	Cloudy	1 - 2	3
August 30	JJ, HM	Bat Hibernacula Survey	08:00 – 23:00	20	Cloudy	1 - 2	3
August 31	JJ, HM	Bat Hibernacula Survey	08:00 – 23:00	20	Cloudy	1 - 2	3
September 1	JJ, HM	Bat Hibernacula Survey	08:00 – 23:00	22	Cloudy	1 - 2	3

[1] Surveyors: ME = Matt Evans, JP = Jon Pleizier, IK = Izabela Kalkowski, JB = Jeff Balsdon, JJ = Joel Jameson, SM = Said Mohammed, LL = Leah Lefler, SKM = Sarah Mainguy.
[2] Beaufort wind scale: 0 – calm; 1 – light air; 2 – light breeze; 3 – gentle breeze; 4 – moderate breeze.
[3] Beaufort rain scale: 0 – Complete dryness; 1 – Mist or fog; 2 – Individual drops; 3 – Fine rain; 4 – Visible light shower.
*Data retrieved July 2013 from Environment Canada weather station Timmins, Ontario.

APPENDIX II

PHOTOS OF BAT DETECTOR SET-UPS



Photo 1: An example of a cavity tree identified during bat maternity roosting habitat surveys. The photo is of cavity tree 7c-1 identified in plot 7c. The tree was identified as Trembling Aspen with a diameter at breast height of 44.5 cm, an approximate height of 10 m and containing 5 - 10 cavities.



Photo 2: An example of a bat detector set-up employed in the acoustic surveys. This photo is of the bat detector at Station D1. The microphone is aimed slightly toward the ground to prevent damage from rain.



Photo 3: Abandoned mine site AMIS 00031 surveyed for its potential as a bat hibernaculum.



Photo 4: Abandoned mine site AMIS 0064 surveyed for its potential as a bat hibernaculum.



Photo 5: Abandoned mine site AMIS 00085 surveyed for its potential as a bat hibernaculum.



Photo 6: Abandoned mine site AMIS 00104 surveyed for its potential as a bat hibernaculum.



Photo 7: Abandoned mine site AMIS 00131 surveyed for its potential as a bat hibernaculum.



Photo 8: Abandoned mine site AMIS 00149 surveyed for its potential as a bat hibernaculum.



Photo 9: Abandoned mine site AMIS 00234 surveyed for its potential as a bat hibernaculum.



Photo 10: Abandoned mine site AMIS 00340 surveyed for its potential as a bat hibernaculum.

APPENDIX III

EXAMPLES OF THE BAT ACOUSTIC ANALYSIS

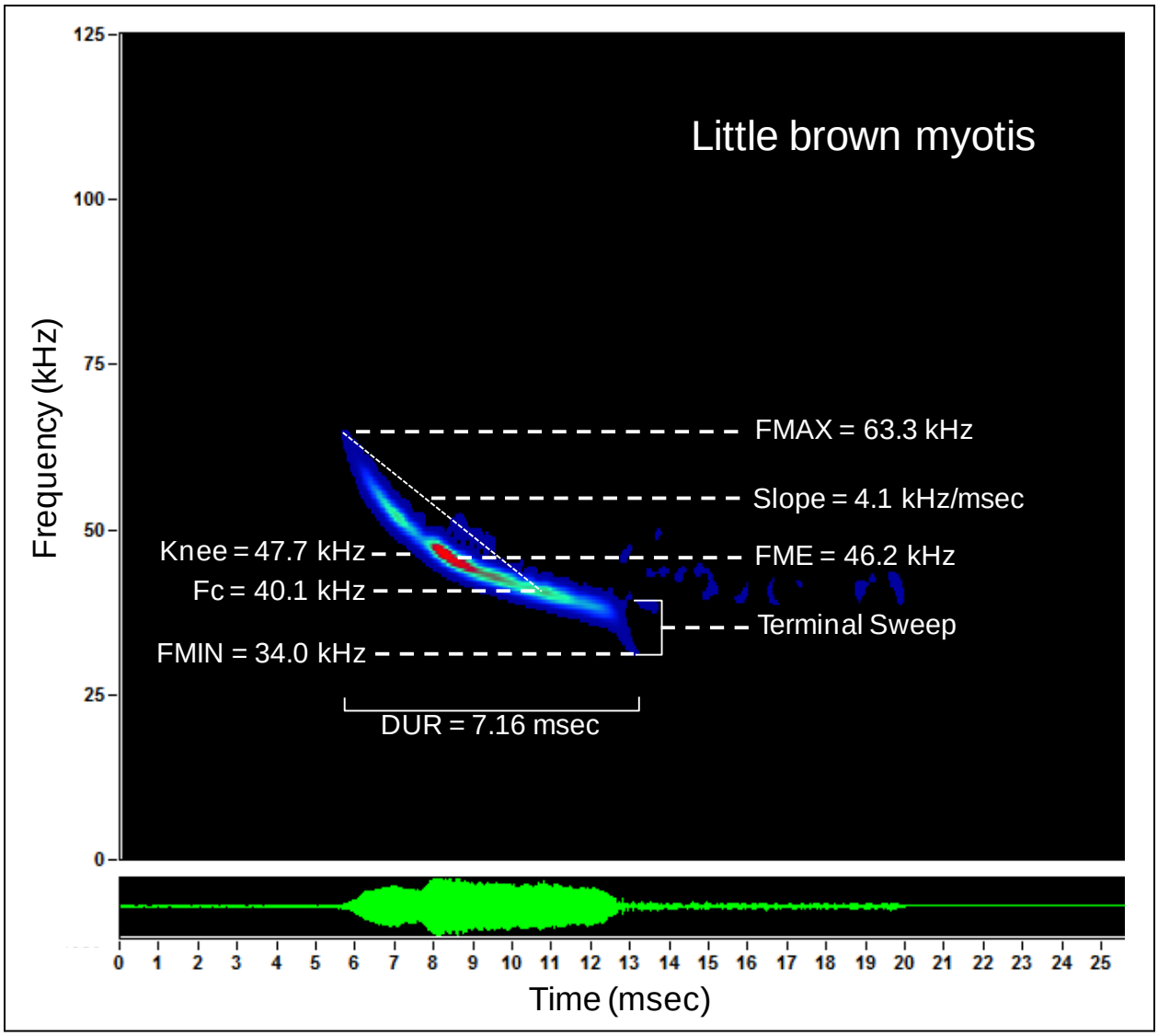

Figure 1: Spectrogram (above) and oscillogram (below) of a search-phase echolocation pulse from a little brown myotis (Myotis lucifugus). Parameters displayed are those used to identify which species emitted the call: FMAX = Maximum frequency, FMIN = Minimum frequency, FME = Frequency with maximum energy, Knee = Frequency of most abrupt change in slope, Fc = Main frequency at the end of the call, DUR = Duration.

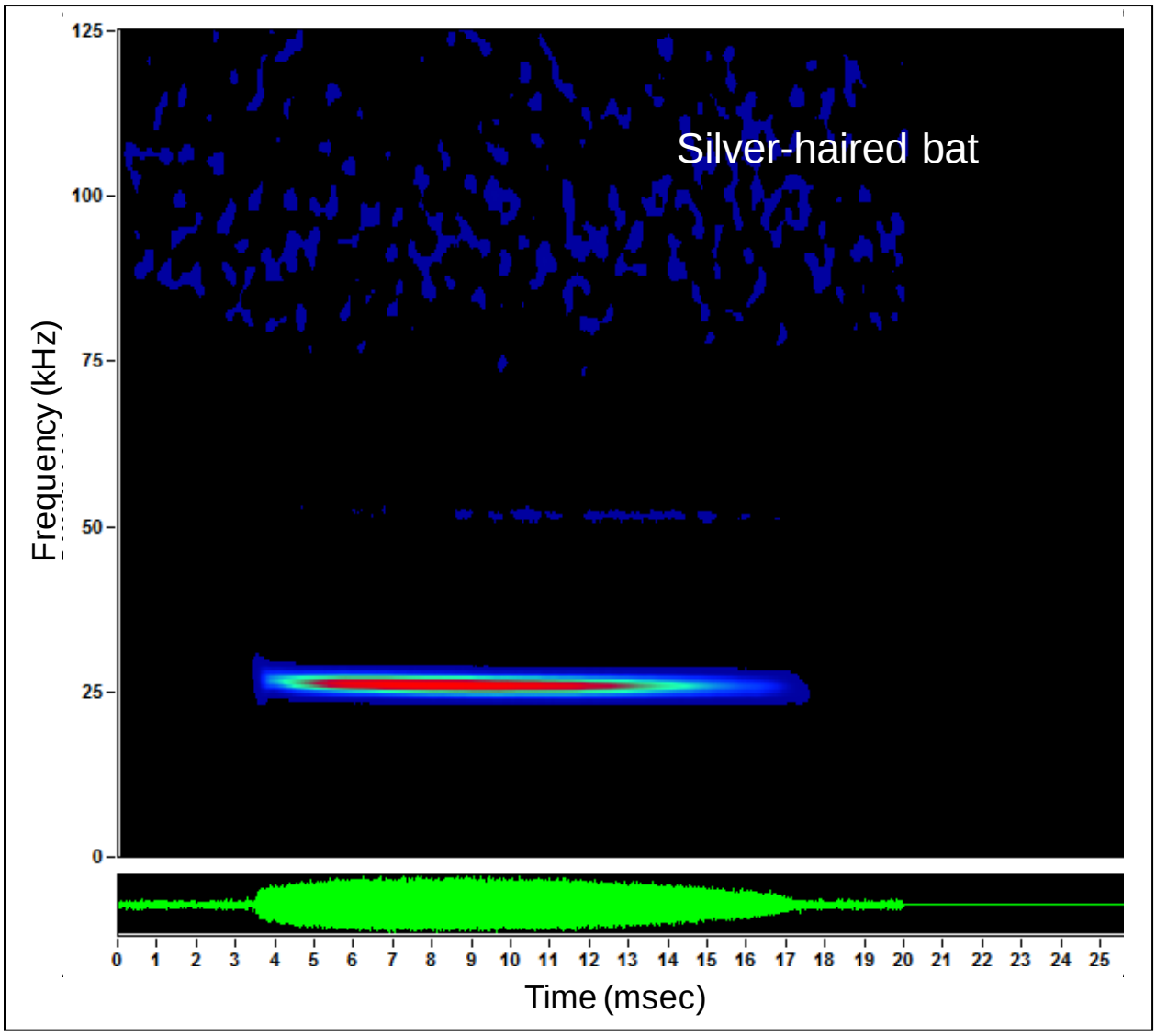

Figure 2: Spectrogram (above) and oscillogram (below) of a search-phase (constant frequency variant) echolocation pulse from a silver-haired bat (Lasionycteris noctivagans).

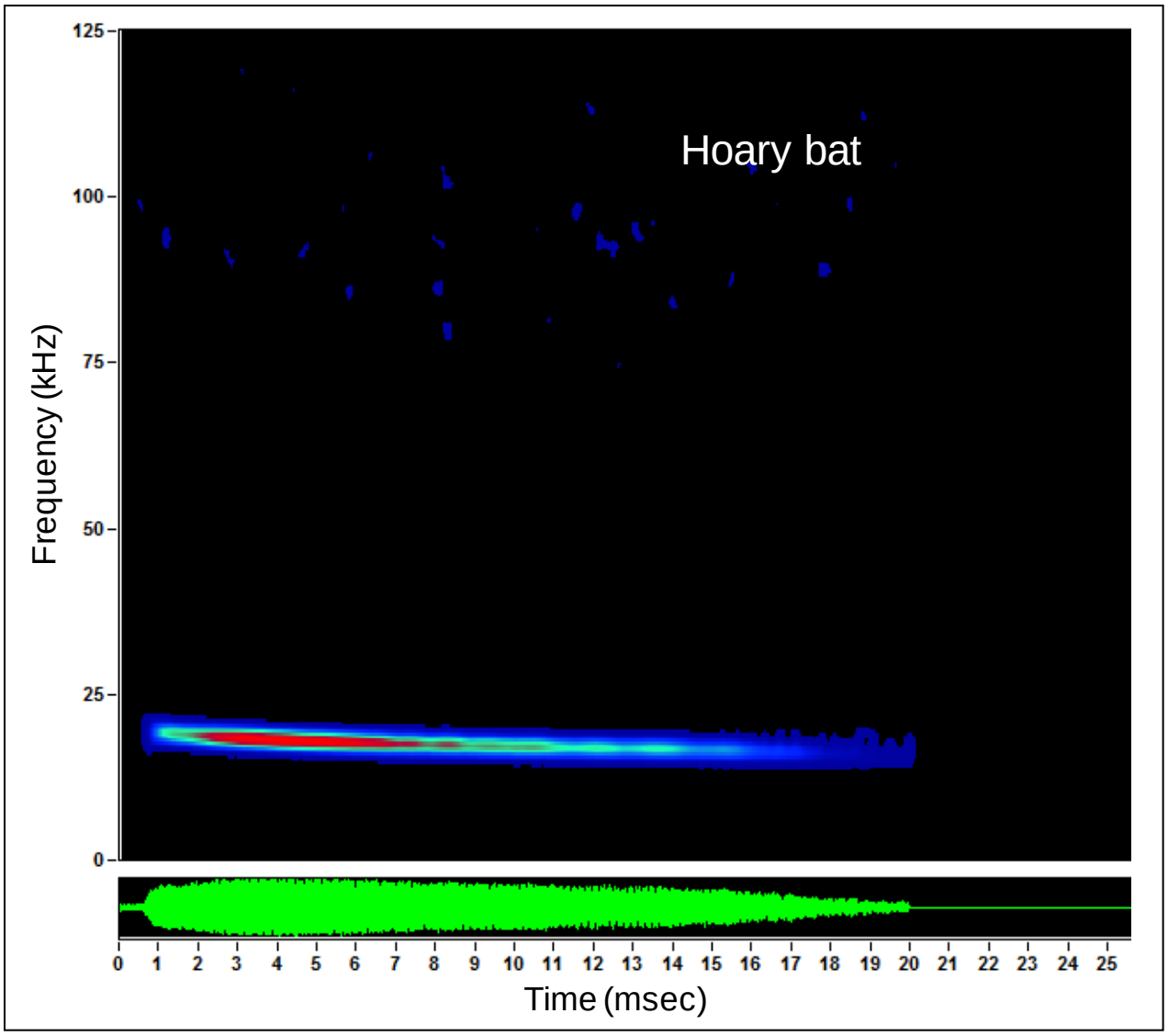

Figure 3: Spectrogram (above) and oscillogram (below) of a search-phase echolocation pulse from a hoary bat (Lasiurus cinereus).

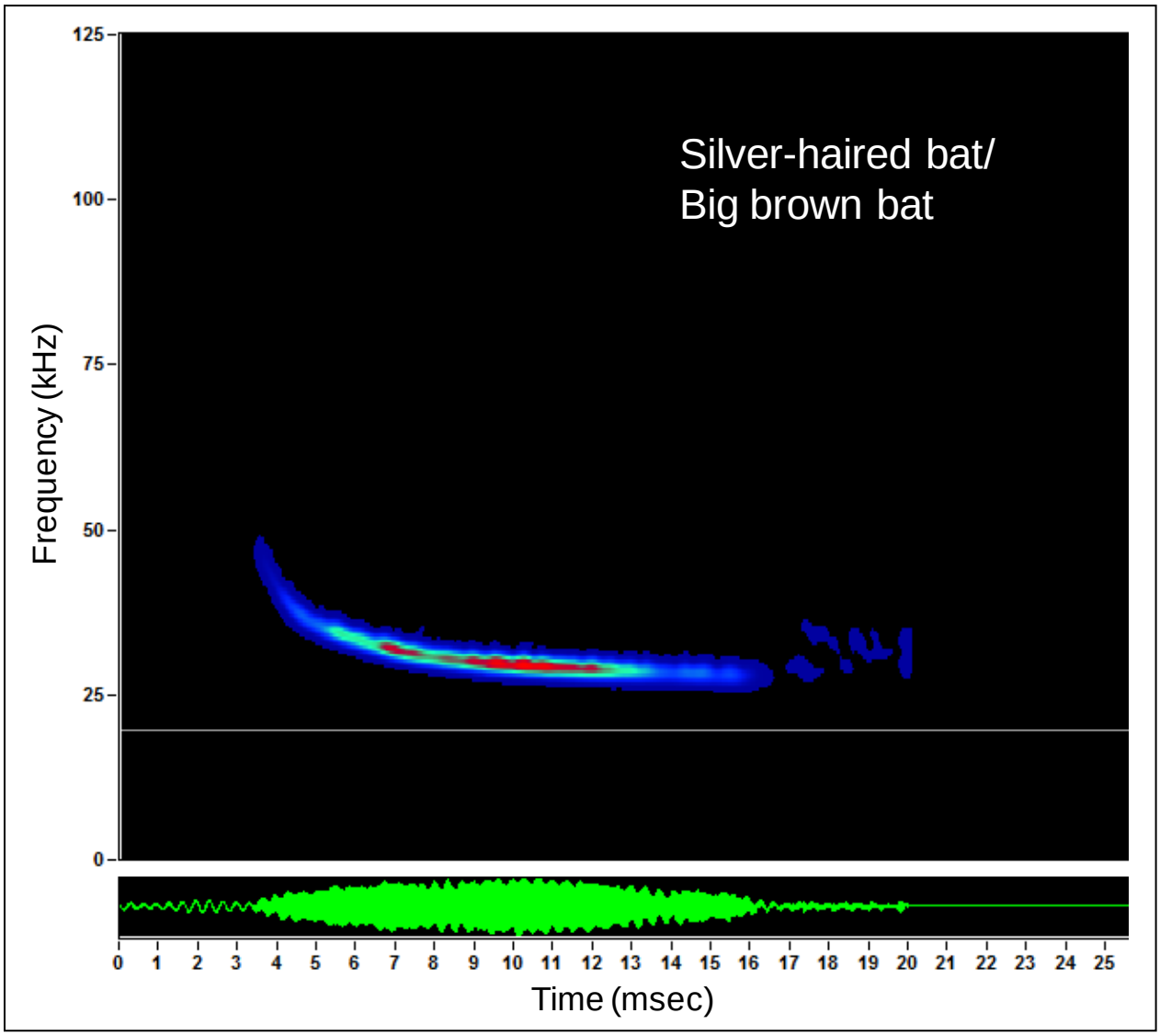

Figure 4: Spectrogram (above) and oscillogram (below) of a search-phase echolocation pulse from either a silver-haired bat (Lasionycteris noctivagans) or a big brown bat (Eptesicus fuscus). These two species produce certain variants of echolocation that are similar to each other. This often makes it nearly impossible to accurately distinguish between these species using echolocation.

APPENDIX IV

PHOTOGRAPHS OF VEGETATION COMMUNITIES



B014: Very Shallow, Dry to Fresh: Conifer /
ES1r: White Spruce – White Birch – very shallow soil – species rich



B034: Dry, Sandy: Jack Pine – Black Spruce Dominated /
ES2: Jack Pine – Coarse Soil



B055: Dry to Fresh, Coarse: Aspen - Birch Hardwood /
ES3: White Birch – Trembling Aspen – Black Spruce – Coarse Soil



B049: Dry to Fresh, Coarse: Jack Pine - Black Spruce Dominated /
ES4: Black Spruce – Jack Pine – Coarse Soil



B082: Fresh, Clayey: Black Spruce - Jack Pine Dominated /
ES5f: Black Spruce – Fine Soil



B114: Moist, Fine: Black Spruce - Pine Conifer /
ES5m: Black Spruce – Medium Soil



B083: Fresh, Clayey: Black Spruce - Pine Conifer /
ES6f: Black Spruce – Trembling Aspen – Fine Soil



B104: Fresh, Silty to Fine Loamy: Aspen - Birch Hardwood /
ES6m: Trembling Aspen – Black Spruce – Balsam Fir – Medium Soil



B040: Dry, Sandy: Aspen – Birch Hardwood /
ES6c: Trembling Aspen – Black Spruce – Jack Pine – Coarse Soil



B088: Fresh, Clayey: Aspen - Birch Hardwood /
ES7f: Trembling Aspen – White Spruce – White Birch – Fine Soil



B104: Fresh, Silty to Fine Loamy: Aspen - Birch Hardwood /
ES7m: Trembling Aspen – White Birch – Medium Soil



B055: Dry to Fresh, Coarse: Aspen - Birch Hardwood /
ES7c: Trembling Aspen – White Birch – Coarse Soil



B222: Mineral Poor Conifer Swamp /
ES8: Black Spruce – Feathermoss – Sphagnum – Moist Soil



B223: Mineral Intermediate Conifer Swamp /
ES9p: Black Spruce – Larch – Moist Soil – Species Poor



B224: Mineral Rich Conifer Swamp /
ES9r: White Spruce – Balsam Fir – White Cedar – Moist Soil – Species Rich



B127: Organic Poor Conifer Swamp /
ES11: Black Spruce – Labrador-tea – Organic Soil



B128: Organic Intermediate Conifer Swamp /
ES12: Black Spruce – Larch – Labrador-tea – Organic Soil



B129: Organic Rich Conifer Swamp /
ES13p: Black Spruce – Larch – Speckled Alder – Organic Soil – Species Poor



B129: Organic Rich Conifer Swamp /
ES13r: White Cedar – Black Spruce – Organic Soil – Species Rich

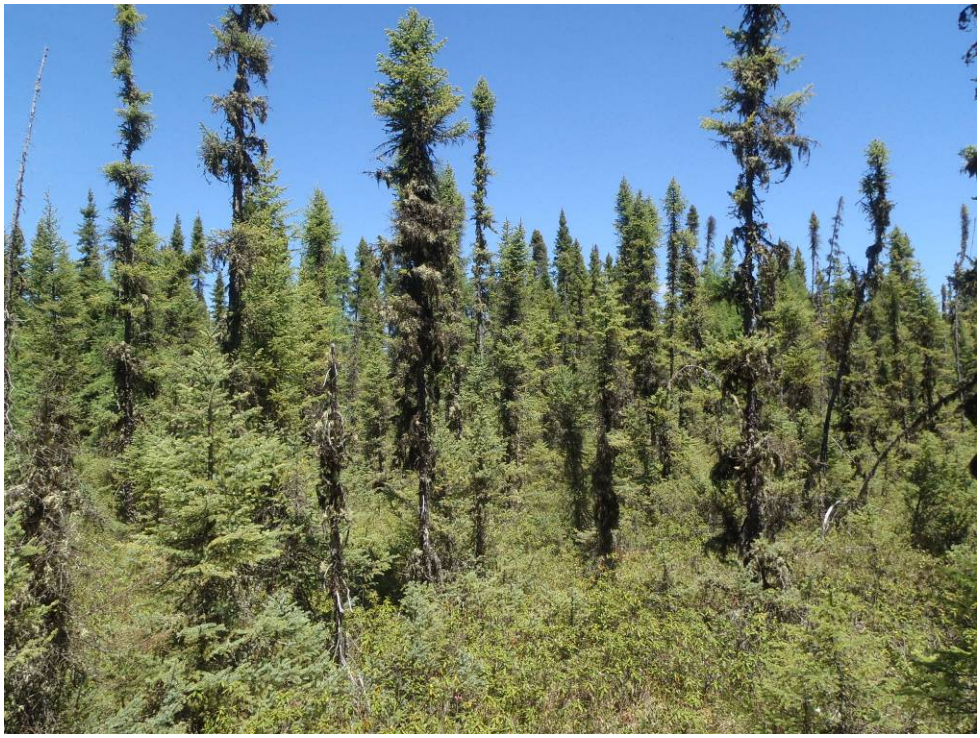

B137: Sparse Treed Bog /
ES14: Black Spruce – Leatherleaf – Organic Soil



B058: Dry to Fresh, Coarse: Maple Hardwood /
ES15: Red Maple



B104: Fresh, Silty to Fine Loamy: Aspen - Birch Hardwood /
ES16: Yellow Birch



ES19: White Pine – Red Pine – Mixedwood /
B039: Dry, Sandy: Red Pine – White Pine Mixedwood



B139: Poor Fen / B140: Open Moderately Rich Fen /
lsF: low shrub-dominated Fen



B136: Sparse Treed Fen /
lsF: low shrub-dominated Fen



B148: Mineral Shallow Marsh / B149: Organic Shallow Marsh /
reM: robust-leaved emergent vegetation-dominated Marsh



B142: Mineral Meadow Marsh / B144: Organic Meadow Marsh /
neM: narrow-leaved emergent vegetation-dominated Marsh



B134: Mineral Thicket Swamp / B135: Organic Thicket Swamp /
tsS: tall shrub-dominated Swamp

APPENDIX V

APPENDIX E: PHOTOGRAPHS OF STUDY AREA FROM THE WINTER AND SPRING AERIAL SURVEYS



Photo 1: Typical Mixedwood Forest Community along the Common TLA



Photo 2: Typical Mixedwood Forest Community along Shiningtree TLA



Photo 3: Existing TL along Shiningtree TLA (including the Common TLA)



Photo 4: Typical Coniferous-dominated communities along Cross-Country TLA



Photo 5: Typical Moose habitat – young poplar stands with saplings



Photo 6: Typical Moose habitat – regenerating deciduous forest



Photo 7: Typical Moose habitat – clear-cut areas



Photo 8: Moose sighting in typical habitat – regenerating forest with saplings



Photo 9: Bear “Nests” – sign of bear activity / browse of leaf buds



Photo 10: Black Bear observed at den during spring aerial surveys



Photo 11: Black Bear den observed during spring aerial surveys



Photo 12: Open/young forest habitat in which Black Bear den was observed



Photo 13: Potential Bat Hibernacula – rocky cliff / ridge



Photo 14: Large raptor stick nest typical of Bald Eagle or Osprey



Photo 15: Typical Raven stick nest observed in transmission line towers

APPENDIX VI

SITE-SPECIFIC RESULTS AND DISCUSSION OF BAT ACOUSTIC ACTIVITY SURVEY

Detector 1

A total of 2,294 bat passes were recorded at D1 over 1.5 nights (Graphic 1) resulting in an average nightly activity of 1,498 bat passes / night. This level of activity is at least 11.3 times greater than that recorded at any other site in the Project Study Area. Due to the large number of files recorded, a subsample of 1,021 passes for the first night and 126 passes for the second night were selected for identification to species (Graphic 2). From the recordings analysed, the presence of 2 species, including one SAR, was confirmed with reasonable confidence at this location: the Silver-Haired Bat and the Little Brown Myotis. The activity level for the Little Brown Myotis and other *Myotis* species exceeded that recorded at D5 and D2 by approximately 50 and 70 times respectively and that at all other locations by greater than 100 times. While the activity recorded from calls identifiable to the Little Brown Myotis and more generally to the genus *Myotis* remained relatively consistent between night 1 and night 2, activity of Silver-Haired Bats and the Silver-Haired / Big Brown Bat group was 25 times greater on night 1 compared to night 2.

A number of factors may explain the elevated level of activity observed for Little Brown Myotis at D1 compared to all other sites. This is the only surveyed location directly at the edge of a linear wetland that also connects a number of lakes. Bats may be using this feature as a corridor for foraging and commuting between roosting and foraging sites. Insect abundance may have been particularly elevated at this site during the survey. The survey location may also have been in proximity to a roost or a hibernaculum (Furlonger et al. 1987) although Little Brown Myotis are also known to travel up to 3.2 km between summer roosts and foraging sites (Henry et al. 2002) and up to 500 km between summer roosts and winter hibernacula (Norquay *et al*. 2013). It is unclear why activity of *Myotis* remained relatively consistent from Night 1 to Night 2, yet activity of the Silver-Haired / Big Brown Bat group decreased dramatically on Night 2 compared to Night 1. One explanation is that, if the majority were in fact Silver-Haired Bats, then Night 1 may have represented a spring migration event. Although plot-based habitat surveys were not conducted at this specific location, based on aerial imagery, forest type and age structure at this location did not seem to differ from that where habitat surveys were conducted. Additional surveys (e.g. acoustic and habitat surveys in late August and September) may help to better understand the significance of the area around D1 for bats.

Detector 2

A total of 118 bat passes were recorded at D2 over 7 nights (Graphic 1) resulting in an average nightly activity of 16 bat passes / night. Thirty-nine passes could be confidently identified to a single species confirming the presence of 3 species at this location including one SAR: the Little Brown Myotis, the Silver-Haired Bat, and the Hoary Bat (Graphic 3). The greatest proportion of passes belonged to the Silver-Haired and Silver-Haired / Big Brown Bat groups (50%), followed by the Little Brown Myotis and other *Myotis* groups (35%).

As expected, this location offers suitable foraging habitat for the Little Brown Myotis and is also used by other bat species groups. It is unknown whether the immediate area contains bat roosts, however none were observed during deployment of the bat detector.

Detector 3

A total of 926 bat passes were recorded at D3 over 7 nights (Graphic 1) resulting in an average nightly activity of 133 bat passes / night. Of these, 179 passes could be confidently identified to a single species confirming the presence of 3 species at this location including one SAR: the Little Brown Myotis, the Silver-Haired Bat, and the Hoary Bat (Graphic 4). The greatest proportion of passes belonged to the Silver-Haired and Silver-Haired / Big Brown Bat groups (80%), followed by the Hoary and Silver-Haired / Hoary Bat groups (13%).

Silver-Haired Bats prefer to forage in thinned and patchy forests where they forage along corridors and forest edge (Patriquin and Barclay 2003). As expected, D3 was located at the edge of a narrow forest road within a forest riddled with back roads and the most common species detected included the Silver-Haired Bat. This species is likely roosting in this forest though no potential roosts were found.

Detector 4

A total of 2 bat passes were recorded at D4 over 7 nights resulting in an average nightly activity of less than 1 (0.3) bat pass / night. Both recorded passes were identified to the Silver-Haired / Big Brown Bat class. No SAR species were identified.

This area likely offers poor foraging and roosting conditions for bats.

Detector 5

A total of 115 bat passes were recorded at D5 over 7 nights (Graphic 1) resulting in an average nightly activity of 16 bat passes / night. Of these, 34 passes could be confidently identified to a single species confirming the presence of 3 species at this location including one SAR: the Little Brown Myotis, the Silver-Haired Bat, and the Hoary Bat (Graphic 6). The greatest proportion of passes belonged to the Little Brown Myotis and other *Myotis* groups (53%) followed by the Silver-Haired and Silver-Haired / Big Brown Bat groups (37%).

Detector 5 was deployed on the edge of a wetland which likely offered suitable foraging conditions for bats of the genus *Myotis*, especially Little Brown Myotis given the large open body of shallow water ideal for breeding insects and proximity to forest edge. Little Brown Myotis often travel several kilometres between roosting and foraging sites and this may be the case for the area around D5. This detector was adjacent to habitat survey plots 5a-f and 6a-f where the density of potential roost trees was 3.33 trees/ha, much lower than what is required for consideration as significant maternity roosting habitat. This area is likely used primarily as foraging habitat.

Detector 6

A total of 9 bat passes were recorded at D6 over 7 nights (Graphic 1) resulting in an average nightly activity of 1 bat passes / night. All recorded passes were identified to the Silver-Haired and Silver-Haired / Big Brown Bat classes (Graphic 7). No SAR species were identified.

This area likely offers poor foraging and roosting conditions for bats.

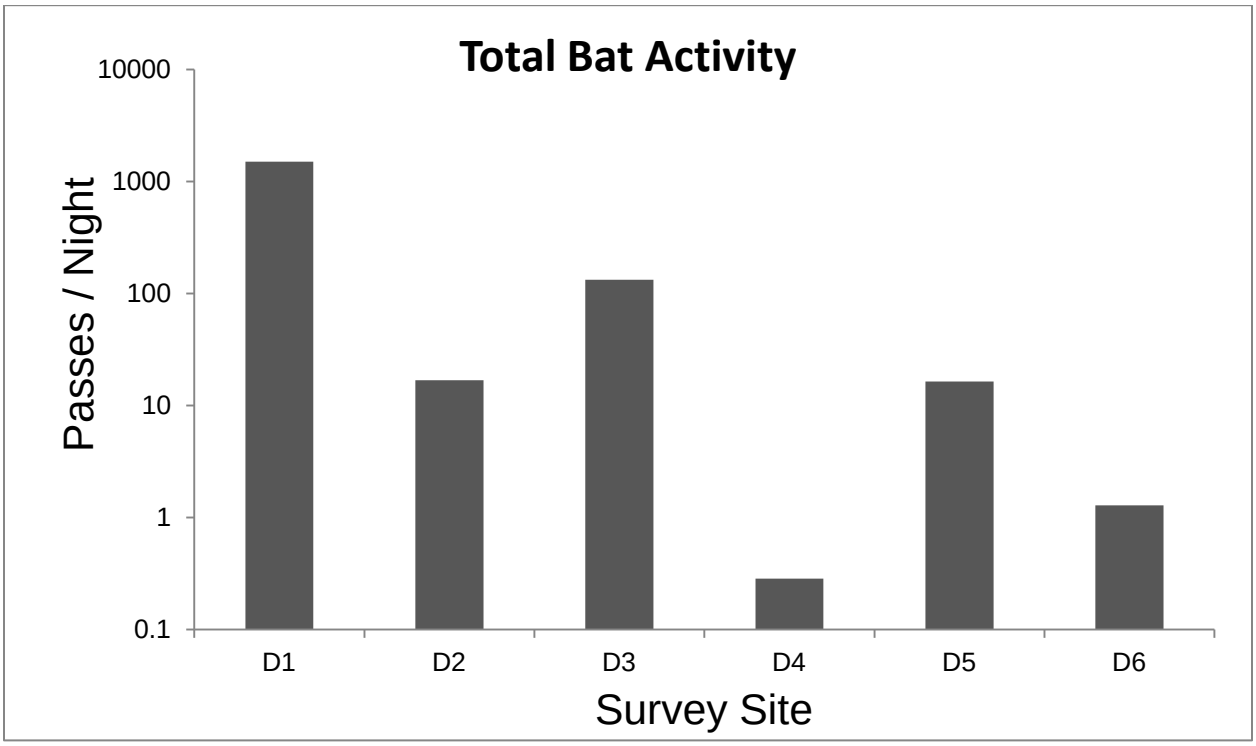

Graphic 1: Average nightly bat activity recorded at six locations throughout the Project Study Area over a period of seven nights from 29 May to 5 June 2013. D1 was only sampled 1.5 nights as the high volume of bat passes at this site prematurely filled the memory card. Note that the y-axis is on a log-scale.

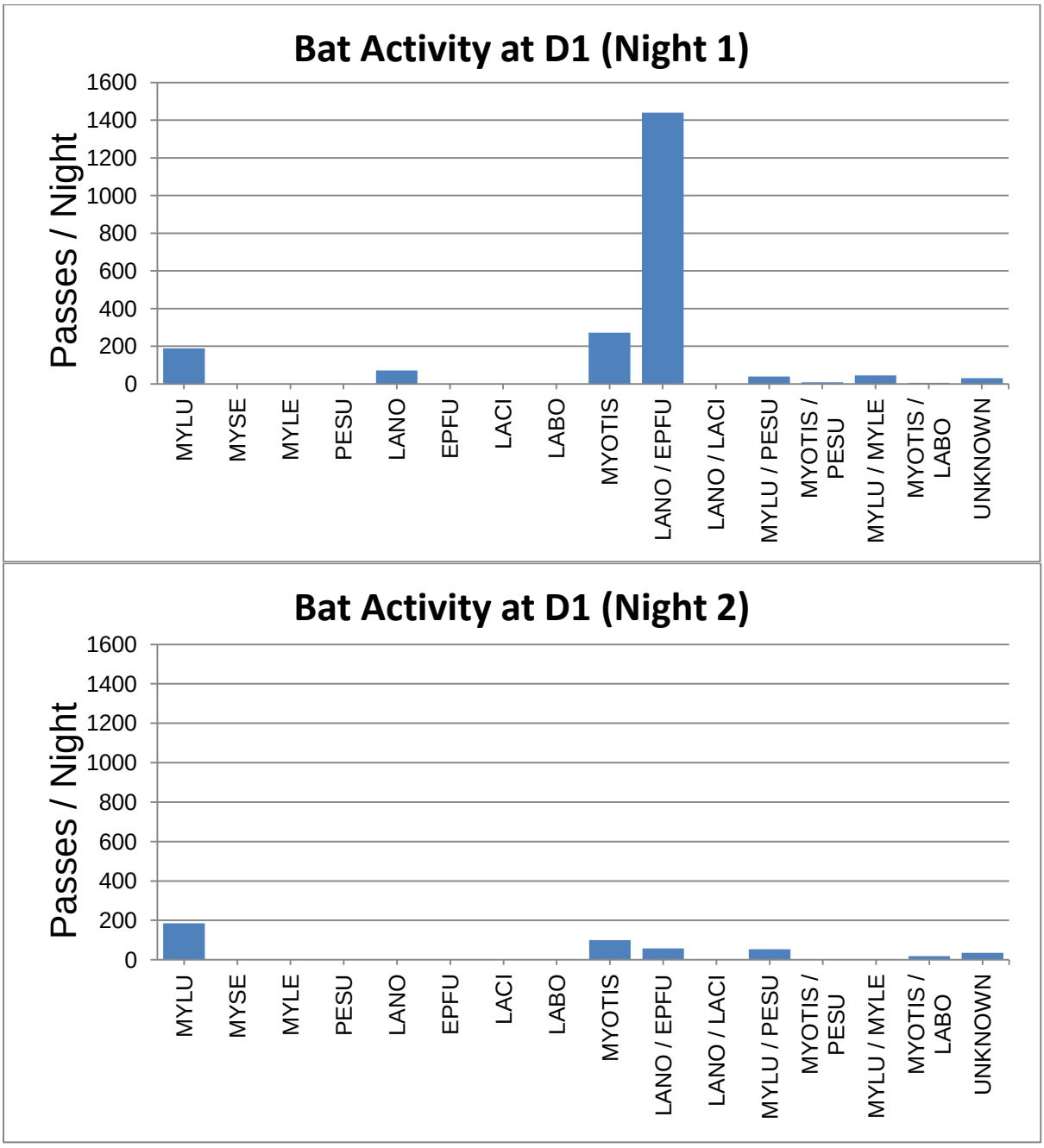

Graphic 2: Average bat activity at D1 recorded between 2045 and 0100 on 29 May (Top) and between 2045 and 2330 on 30 May (Bottom). Only a subsample of bat passes for each night (Night 1 = 1021 / 1685, Night 2 = 126 / 606) was selected for identification to species due to the large number of passes recorded. MYLU=Little Brown Myotis, MYSE=Northern Myotis, MYLE=Eastern Small-Footed Myotis, PESU=Tricolored Bat, LANO=Silver-Haired Bat, EPFU=Big Brown Bat, LACI=Hoary Bat, LABO=Eastern Red Bat.

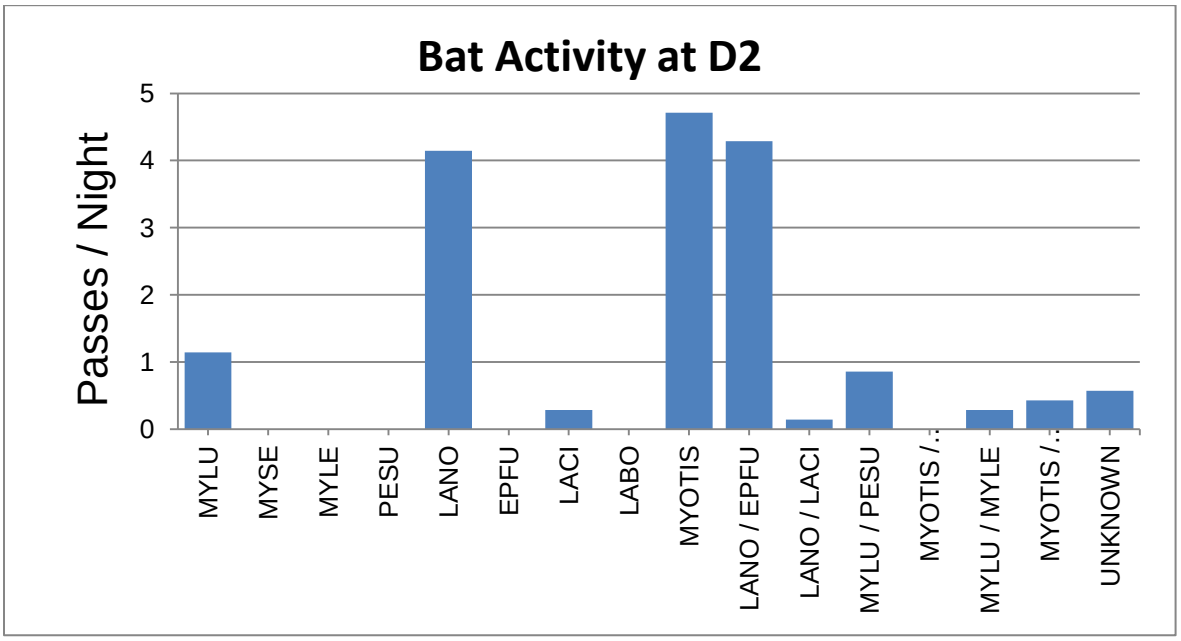

Graphic 3: Average bat activity at D2 recorded over seven nights from 29 May to 5 June 2013. MYLU=Little Brown Myotis, MYSE=Northern Myotis, MYLE=Eastern Small-Footed Myotis, PESU=Tricolored Bat, LANO=Silver-Haired Bat, EPFU=Big Brown Bat, LACI=Hoary Bat, LABO=Eastern Red Bat.

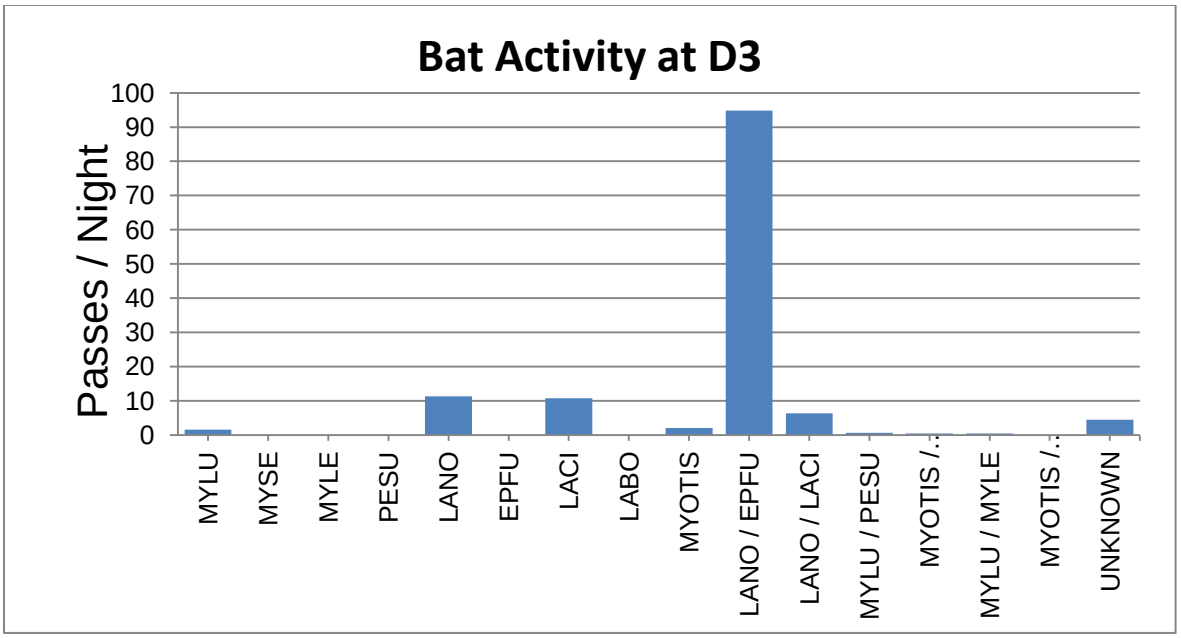

Graphic 4: Average bat activity at D3 recorded over seven nights from 29 May to 5 June 2013. MYLU=Little Brown Myotis, MYSE=Northern Myotis, MYLE=Eastern Small-Footed Myotis, PESU=Tricolored Bat, LANO=Silver-Haired Bat, EPFU=Big Brown Bat, LACI=Hoary Bat, LABO=Eastern Red Bat.

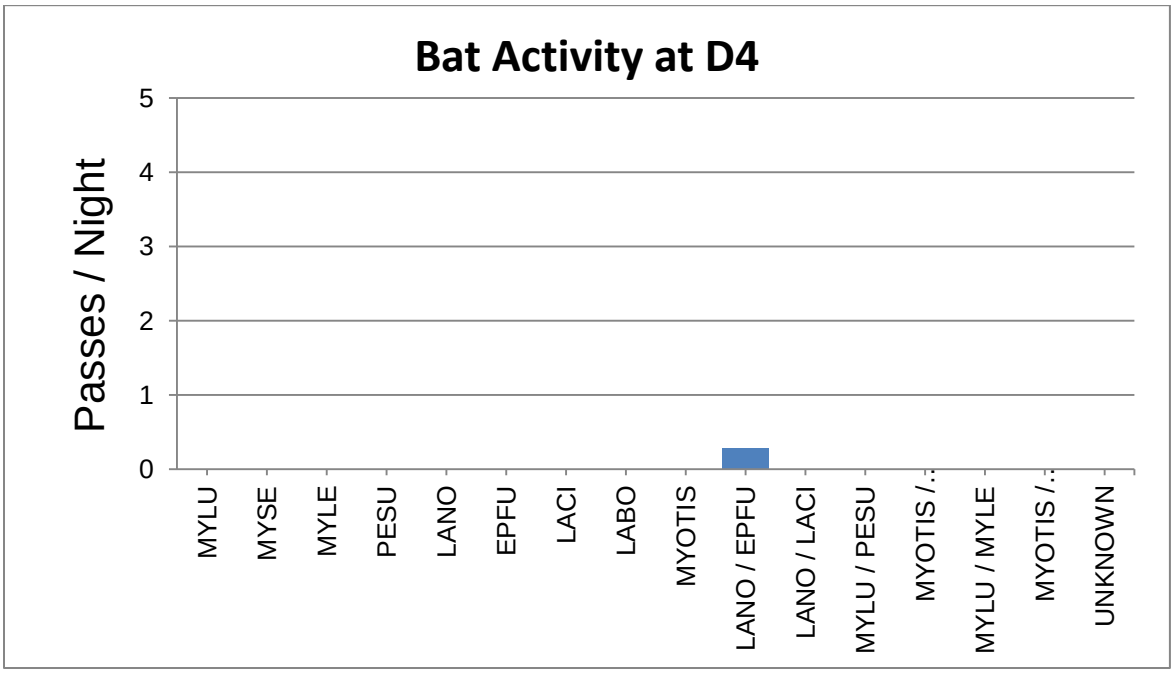

Graphic 5: Average bat activity at D4 recorded over seven nights from 29 May to 5 June 2013. MYLU=Little Brown Myotis, MYSE=Northern Myotis, MYLE=Eastern Small-Footed Myotis, PESU=Tricolored Bat, LANO=Silver-Haired Bat, EPFU=Big Brown Bat, LACI=Hoary Bat, LABO=Eastern Red Bat.

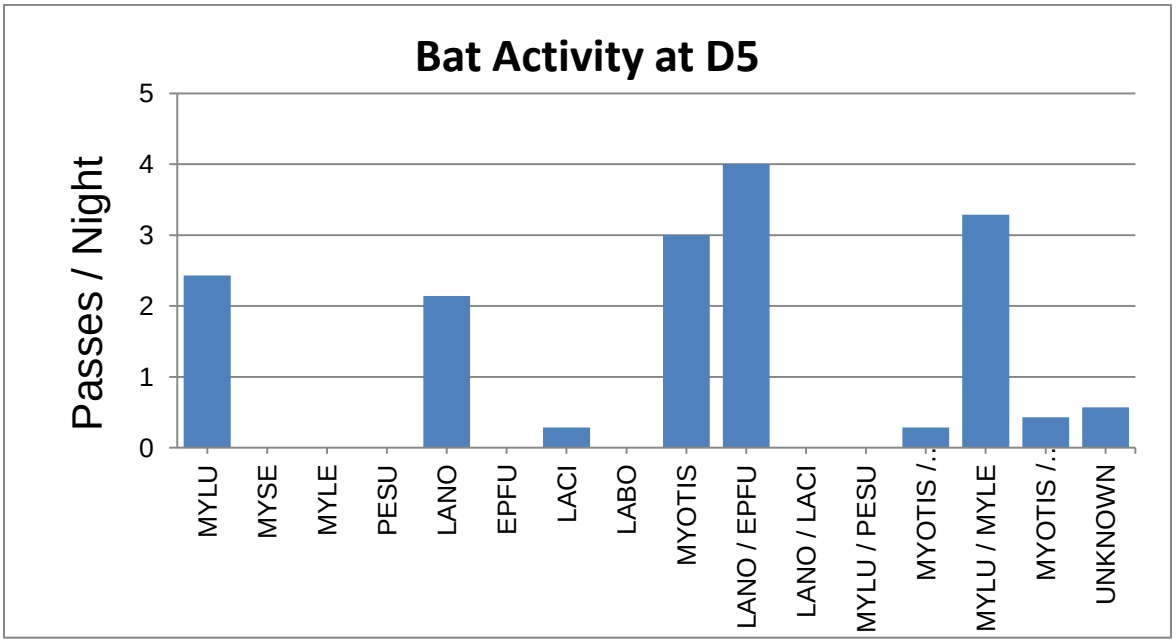

Graphic 6: Average bat activity at D5 recorded over seven nights from 29 May to 5 June 2013. MYLU=Little Brown Myotis, MYSE=Northern Myotis, MYLE=Eastern Small-Footed Myotis, PESU=Tricolored Bat, LANO=Silver-Haired Bat, EPFU=Big Brown Bat, LACI=Hoary Bat, LABO=Eastern Red Bat.

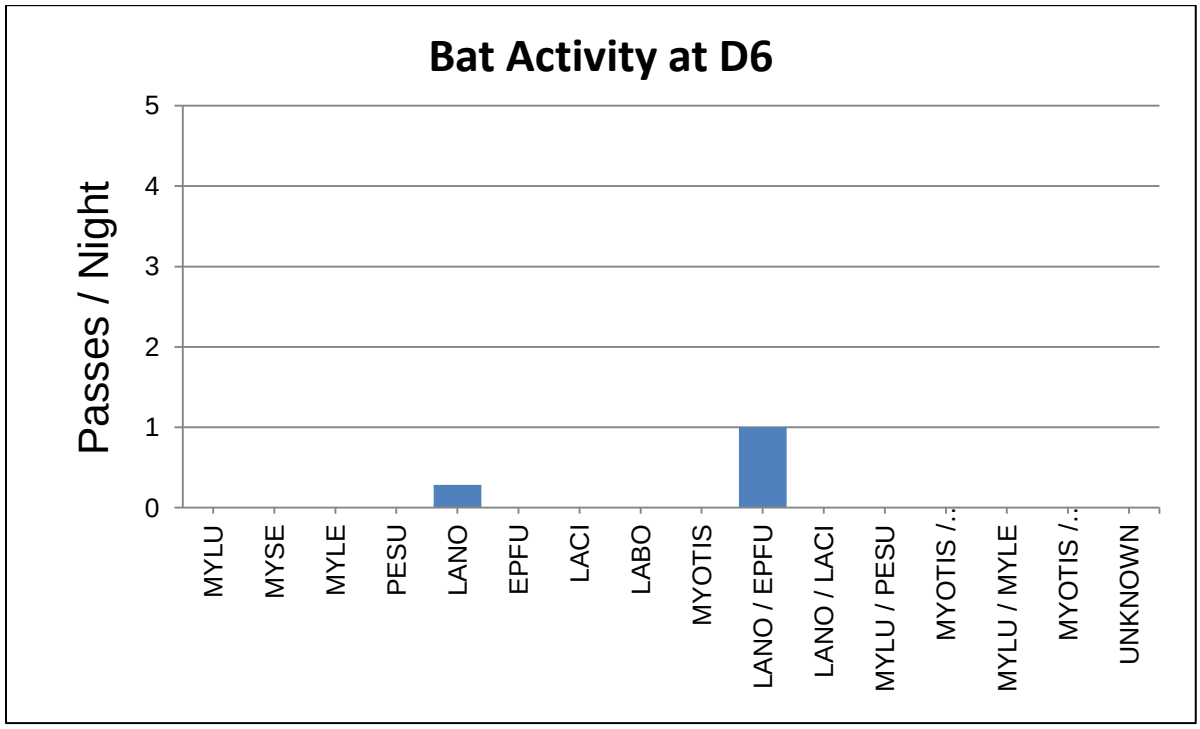

Graphic 7: Average bat activity at D6 recorded over seven nights from 29 May to 5 June 2013. MYLU=Little Brown Myotis, MYSE=Northern Myotis, MYLE=Eastern Small-Footed Myotis, PESU=Tricolored Bat, LANO=Silver-Haired Bat, EPFU=Big Brown Bat, LACI=Hoary Bat, LABO=Eastern Red Bat.

APPENDIX VII

COMMUNICATIONS WITH THE MINISTRY OF NATURAL RESOURCES

Communications with the MNR (AMEC, 2013)

Date	Communication
April 18, 2013	A three hour meeting / conference call was held with the MNR in Timmins on April 18, 2013. IAMGOLD outlined the proposed project and Golder Associates presented their 2012 baseline methods and results. A general discussion was had on methods and coverage for the 2013 baseline surveys being conducted by Golder Associates and AMEC.
June 28, 2013	AMEC requested MNR Habitat Suitability Index (HIS) modeling results for Wildlife Management Units 29 and 31 for Moose, Black Bears, American Marten.
July 12, 2013	MNR responded to AMEC's June 28 request, asking for more information. The MNR stated that they no longer conduct HIS modeling for this region but had data / results for Carrying Capacity modeling if needed.
July 18, 2013	AMEC provided the MNR with more information regarding the June 28 request for HIS data and requested the data / results for Carrying Capacity modeling for Moose, Black Bears, American Marten.
July 18, 2013	AMEC requested bat hibernacula information from the MNR regarding Ministry of Northern Development and Mines data that lists 53 abandoned mines sites within a 2 km buffer zone surrounding the proposed transmission corridor. AMEC also requested any other known bat hibernacula information that the MNR is aware of within the overall project footprint, or within 5 km of it.
July 18, 2013	The MNR provided the bat hibernacula information for 4 of the 53 abandoned mines that AMEC requested earlier in the day. No known / confirmed bat hibernacula exist within the overall project footprint, or within 5 km of it.
July 19, 2013	AMEC and the MNR discussed over the phone AMEC's request for Carrying Capacity modeling for Moose, Black Bears, American Marten.

APPENDIX VIII

FIELD DATA SHEETS

AMEC Earth & Environmental
160 Traders Blvd East, Mississauga, ON L4Z 3K7
Tel: (905) 568-2929
Cell: (416) 459-6228
Fax: (905) 568-1686

Breeding Bird Point Count Survey

Project Name: IAMGOLD		Project Number: TC121522	
Crew Leader:	Observers: Jon Pleizier		
Date: May 29, 2013	Start Time (24hr): 09:30	End Time (24hr): 10:30	
Weather: 100% cloud	Temperature: 14°C	Wind: 0-1	Precipitation (Circle): 0 None, 1 Haze/Fog, 2 Drizzle, 3 Rain

Point Count Name: BB71
UTM:
Start Time 05:39
Habitat:

A = calling

Species	<50m			<100m			>100m		
	3min	5min	10min	3min	5min	10min	3 min	5min	10min
WIWR			1	1			1		
YRWA					1				
WTSP					1		1		
GCKI	1								
HETH					1				
AMRE					1				
COGO									
CORA						1			
COYE			1			1			
SWTH									1

All

Muskeg/Bog WTSP

ES4

F1

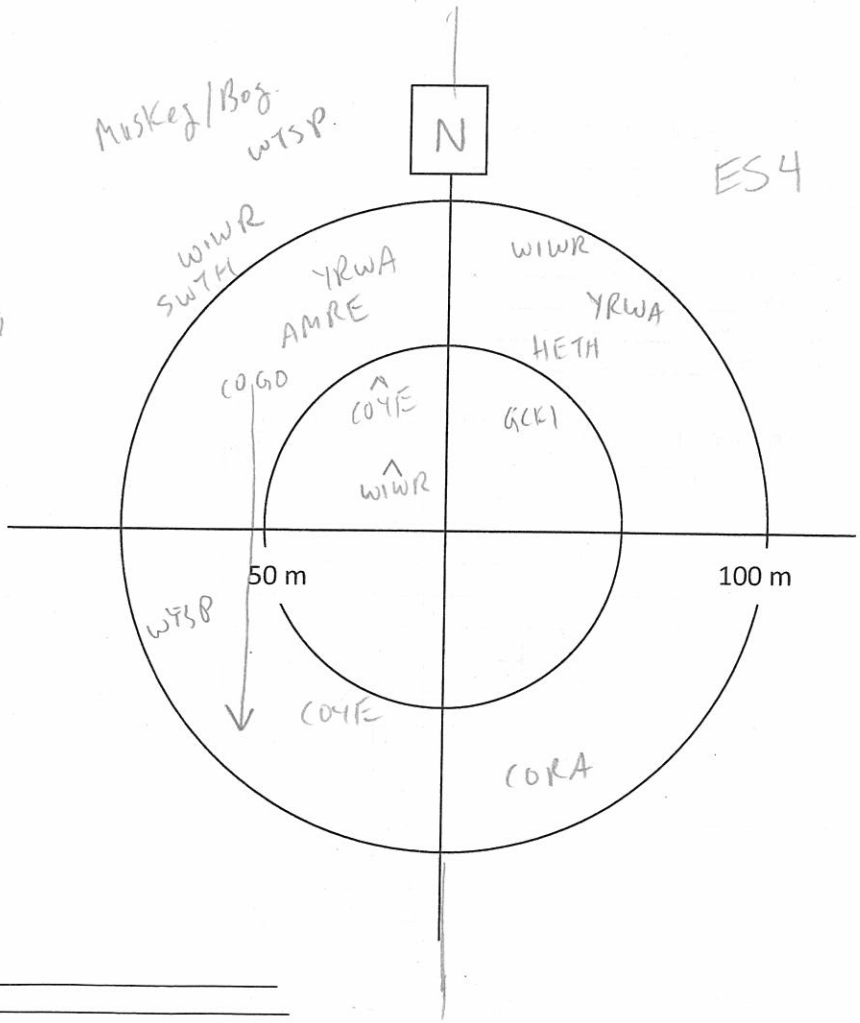

Notes/Incidental observations:
SPPE in wetland - quite loud

ES4 - Ab. Balsamfir / Sw in understory
- Sb + Bj dom. canopy (mostly Sb)
- Poor in GC

Project Number: TC121522
Survey Date: May 29, 2013

AMEC Earth & Environmental
160 Traders Blvd East, Mississauga, ON L4Z 3K7
Tel: (905) 568-2929
Cell: (416) 459-6228
Fax: (905) 568-1686

Point Count Name: BB72
UTM:
Start Time 6:11
Habitat: Black Spruce dom. poor shrublayer

Species	<50m			<100m			>100m		
	3min	5min	10min	3min	5min	10min	3 min	5min	10min
MAWA	I								
RBNU	II								
YBSA				I	F		V		
NOPA	I								
BLBW	II								
SWTH					I		I		
WTSP								I	
OVEN				I		V			
CSWA			I						

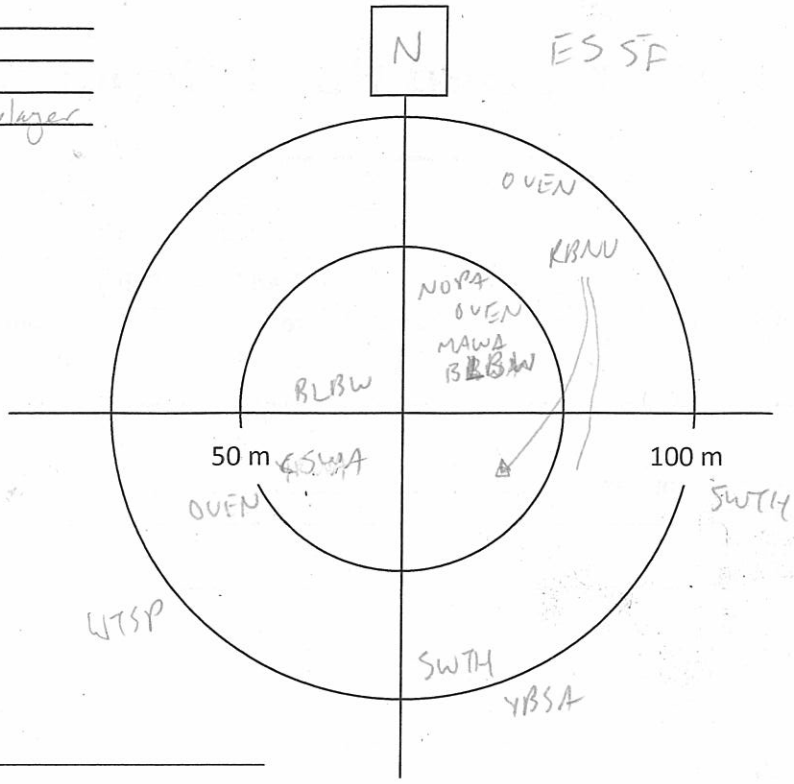

Notes/Incidental observations:
RESQ
Veg: Comm. ES 5F

Point Count Name: BB73
UTM:
Start Time 06:33
Habitat:

Species	<50m			<100m			>100m		
	3min	5min	10min	3min	5min	10min	3 min	5min	10min
BHVI	I								
MAWA						I			

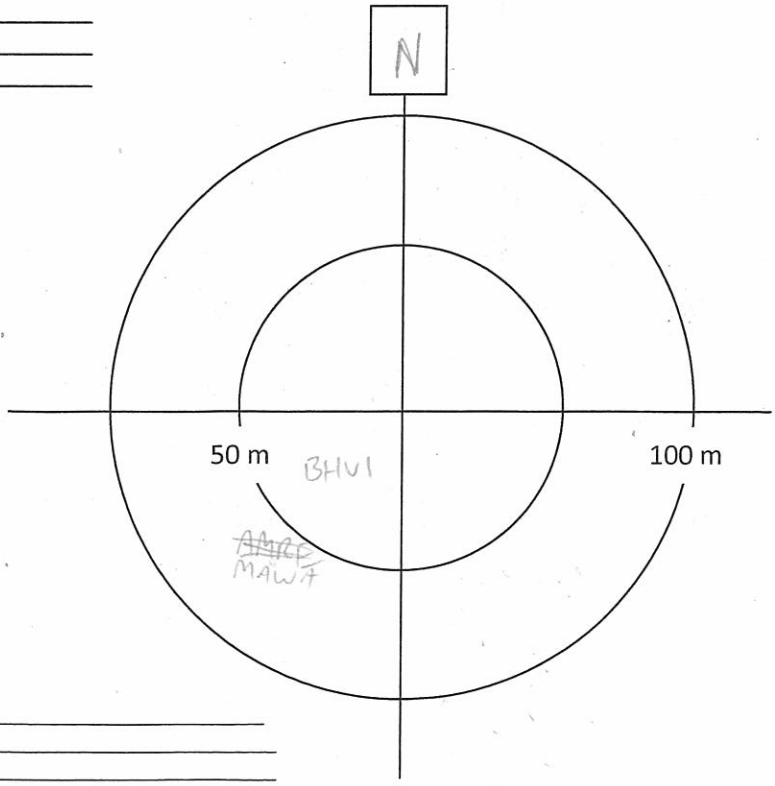

Notes/Incidental observations:
Abundant BE, few small Bw
BTBW en route.

Project Number: TC121522
Survey Date: May 29, 2013

AMEC Earth & Environmental
160 Traders Blvd East, Mississauga, ON L4Z 3K7
Tel: (905) 568-2929
Cell: (416) 459-6228
Fax: (905) 568-1686

Point Count Name: BB76
UTM: _____
Start Time 06:59
Habitat: _____

Species	<50m			<100m			>100m		
	3min	5min	10min	3min	5min	10min	3 min	5min	10min
WIWR	1			1					
SWTH				1					1
NAWA	11								
WTSP				1	1		11		
COYE				1	1				
YBSA								1	
CORA					1				
BLJA									1
CSWA						1			
MOWA						1			
AMRO									1

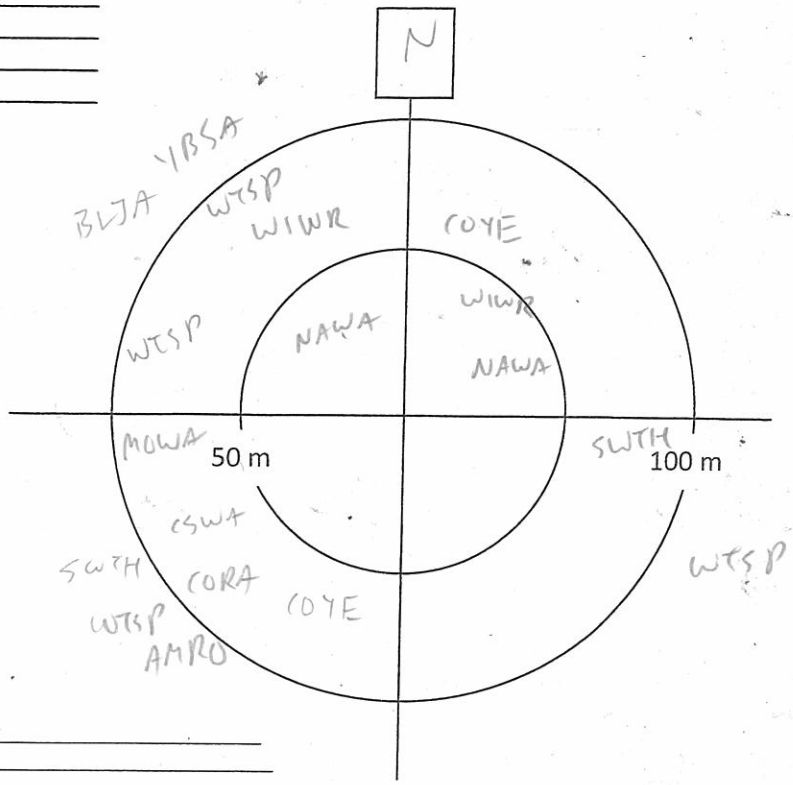

Notes/Incidental observations: _____
ES11 - entire circle.

Point Count Name: BB75
UTM: _____
Start Time 07:26
Habitat: Muskeg / coniferous forest (Bj, Sb)

Species	<50m			<100m			>100m		
	3min	5min	10min	3min	5min	10min	3 min	5min	10min
WTSP				1					
RCKI				1					
YRWA							1		
HETH						1			

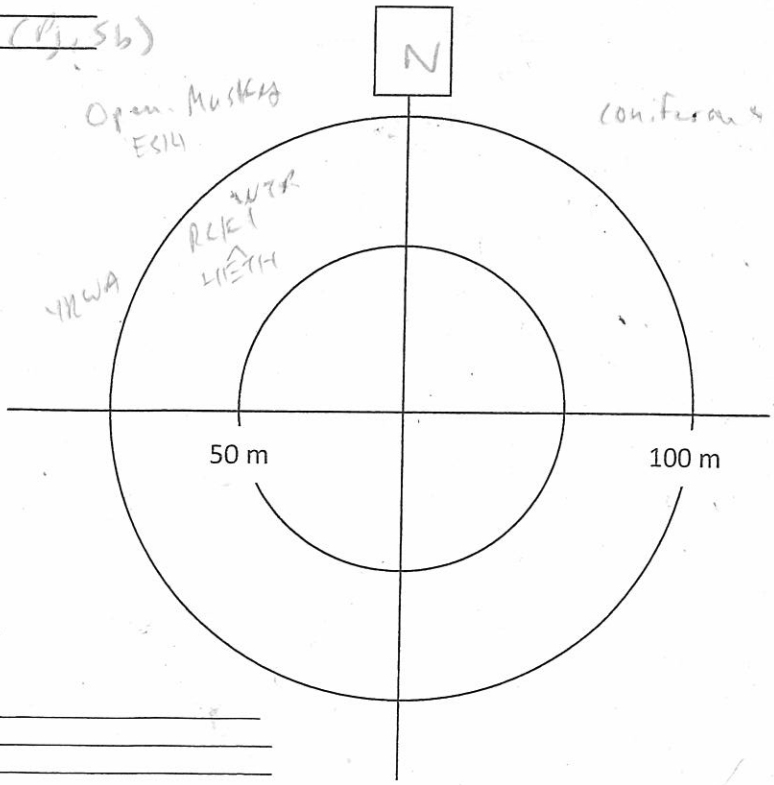

Notes/Incidental observations: ES14, ES4
en route: BAWW

Project Number: TC121522
Survey Date: May 29, 2013

AMEC Earth & Environmental
160 Traders Blvd East, Mississauga, ON L4Z 3K7
Tel: (905) 568-2929
Cell: (416) 459-6228
Fax: (905) 568-1686

Point Count Name: BB80
UTM: _____
Start Time 08:12
Habitat: Lake, ESPZ

Species	<50m			<100m			>100m		
	3min	5min	10min	3min	5min	10min	3 min	5min	10min
RUGR							1		
CSWA				1					
NAWA						1	1		
CORA					1				
YRWA					11				
WTSP									
NOFL									
HETH						1			1
WIWR								1	1

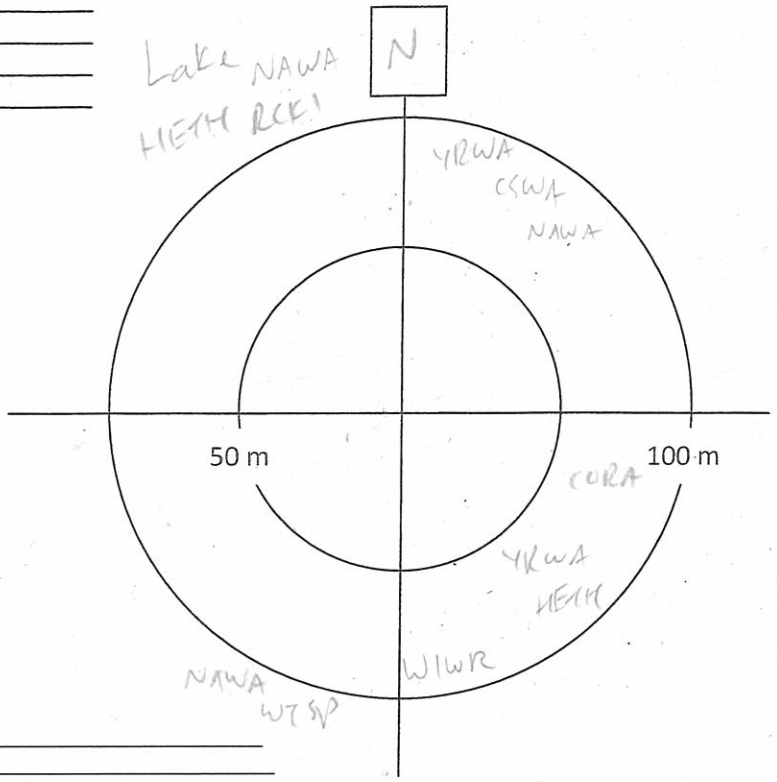

Notes/Incidental observations: RESQ

Point Count Name: BB79
UTM: _____
Start Time 07:50
Habitat: _____

Species	<50m			<100m			>100m		
	3min	5min	10min	3min	5min	10min	3 min	5min	10min
WTSP		11		1					
CSWA	1			1					
YBSA				1					
MOWA	1								
YEWA				1					
RUGR							1		
WTSP							1		
NOFL					1				
RCKI					1				
HETH								1	

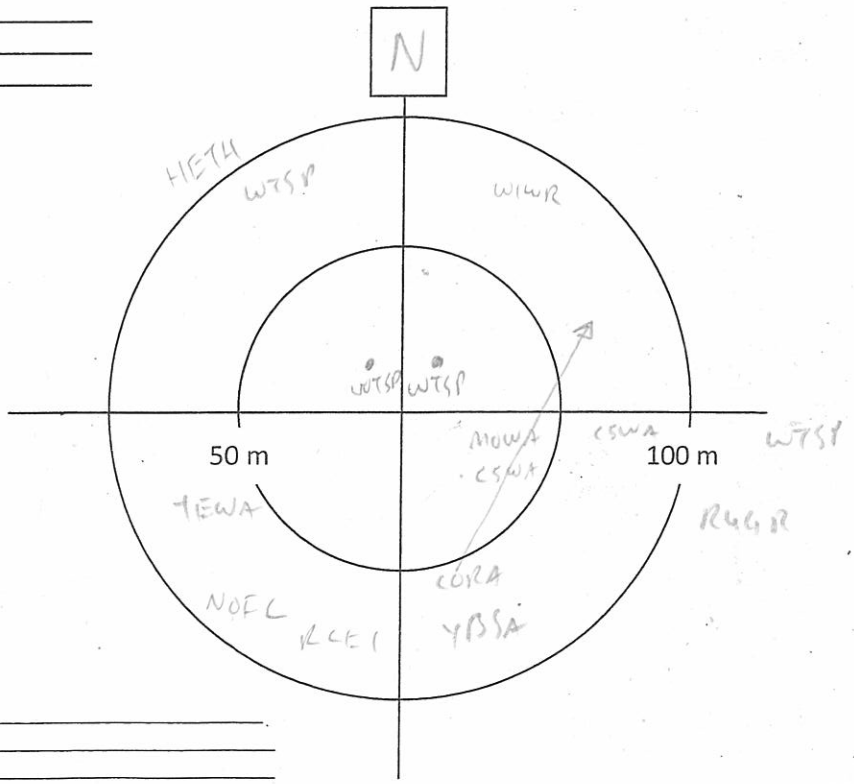

Notes/Incidental observations: _____

Project Number: TC121522
Survey Date: May 29, 2013

AMEC Earth & Environmental
160 Traders Blvd East, Mississauga, ON L4Z 3K7
Tel: (905) 568-2929
Cell: (416) 459-6228
Fax: (905) 568-1686

Point Count Name: BB82
UTM: 005 - E414 177 442727, 5282145
Start Time 09:32
Habitat: cut spruce, ES6F

Species	<50m			<100m			>100m		
	3min	5min	10min	3min	5min	10min	3 min	5min	10min
MAWA	1			1					
WTSP	1			1	1		11	1	
NOPA					1				
CWSA				11				1	
SWTH	1								
WIWR									1
BLJA									1
YRWA						11		1	
~~CORA~~								~~11~~	
~~YBSA~~								~~1~~	
~~NOFL~~								~~1~~	

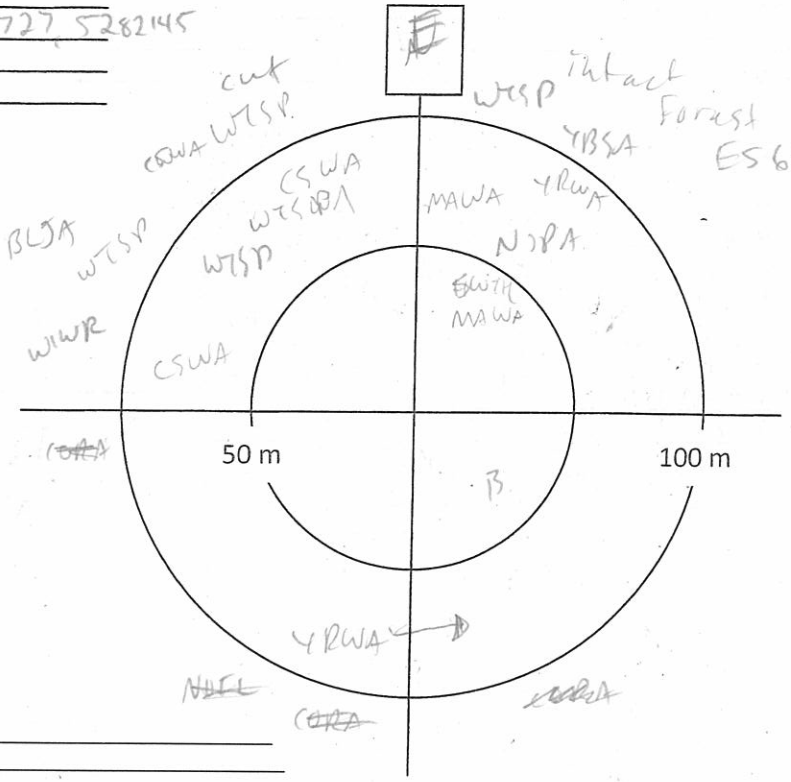

Notes/Incidental observations:

Point Count Name:
UTM: BB81
Start Time 08:55
Habitat:

Species	<50m			<100m			>100m		
	3min	5min	10min	3min	5min	10min	3 min	5min	10min
WTSP				1			111		
MAWA	11								
RUGR				1					
AMRE	1								
CSWA	11								
MAWA				1					
NAWA				1					
LIETH								1	
YBSA								1	
CORA								11	
NOFL								1	

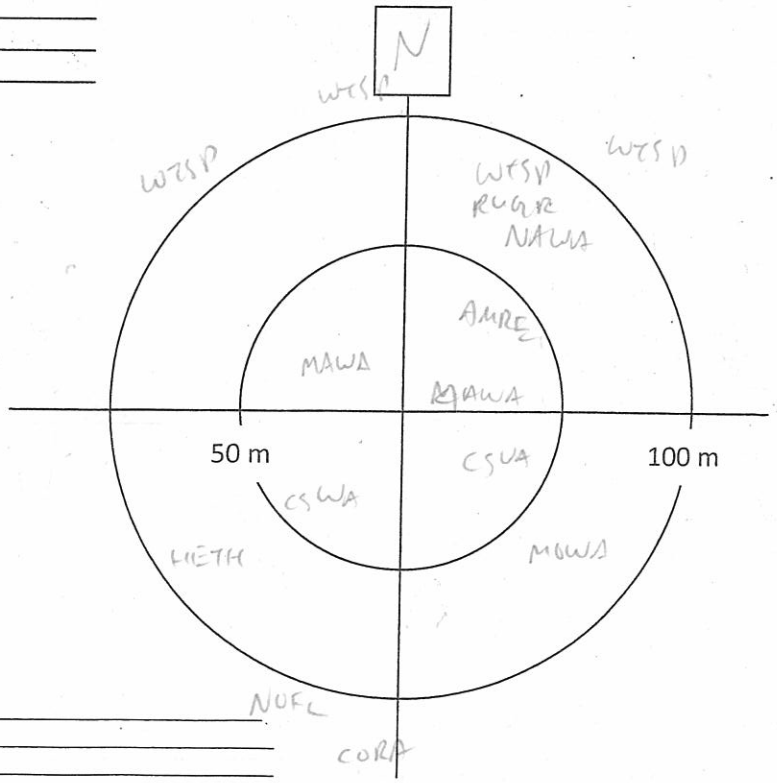

Notes/Incidental observations: FLY

Project Number: TC121522
Survey Date: May 29, 2013

AMEC Earth & Environmental
160 Traders Blvd East, Mississauga, ON L4Z 3K7
Tel: (905) 568-2929
Cell: (416) 459-6228
Fax: (905) 568-1686

Point Count Name: BB79
UTM:
Start Time 09:18
Habitat:

Species	<50m			<100m			>100m		
	3min	5min	10min	3min	5min	10min	3 min	5min	10min
DOWO	1								
WIWR									
WTSP				1	1		1		
RCKI		1		1		1			
MAWA	1					III			1
CSWA									
NAWA	1								
BLCH									
HETH					II	II			
CORA						1			
..									

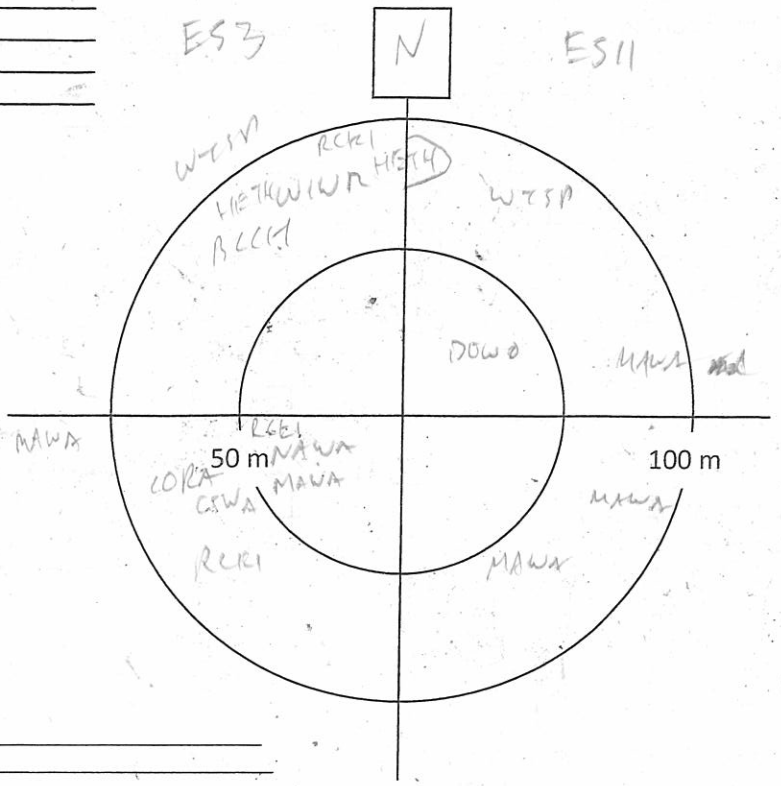

Notes/Incidental observations: RESQ

Point Count Name: BB77
UTM:
Start Time 0939
Habitat:

Species	<50m			<100m			>100m		
	3min	5min	10min	3min	5min	10min	3 min	5min	10min
WTSP				1			11		
WIWR							1		
MAWA	1						1		
WTS									
NAWA					1				
SWTH			1						
YRWA						1			
BWHA			1						

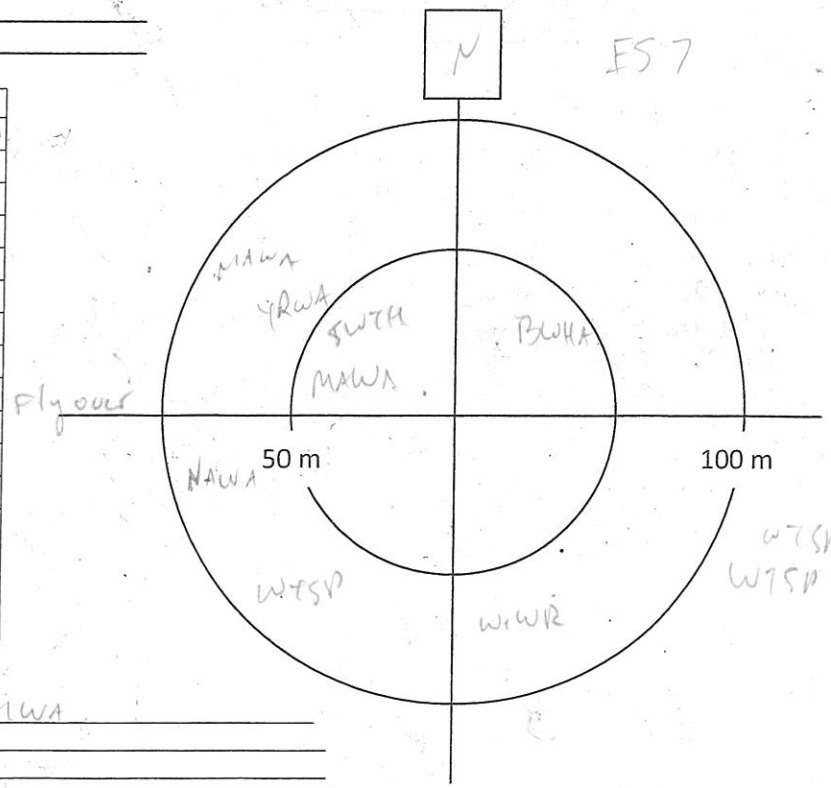

Notes/Incidental observations: en route - CMWA
ES7 - Mountain Maple
RESQ

Project Number: TC121522
Survey Date: May 29, 2013

AMEC Earth & Environmental
160 Traders Blvd East, Mississauga, ON L4Z 3K7
Tel: (905) 568-2929
Cell: (416) 459-6228
Fax: (905) 568-1686

Point Count Name: BB74
UTM: 010 - E414 - 17T 443021, 5283163
Start Time 10:00
Habitat:

Species	<50m			<100m			>100m		
	3min	5min	10min	3min	5min	10min	3 min	5min	10min
NOPA	1								
CAWA	1			1					
BTBW				1					
BLBW	1								
LEFL	1								
CORA				1					
MAWA					1				
SOVI	1								
HAWO			1						
HETH									1
OVEN			1						1
RCKI									1

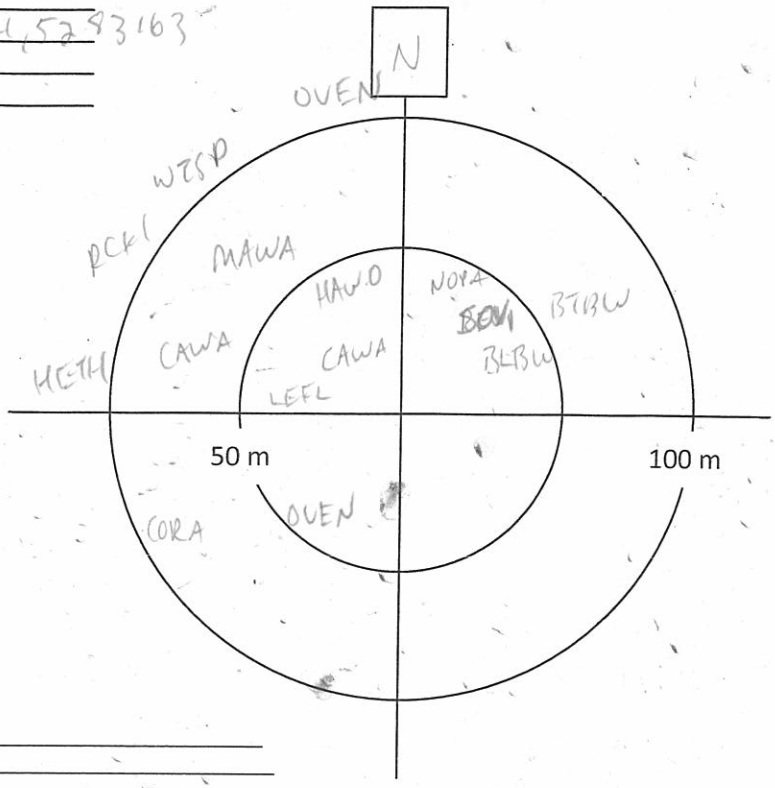

Notes/Incidental observations:

Point Count Name:
UTM:
Start Time
Habitat:

Species	<50m			<100m			>100m		
	3min	5min	10min	3min	5min	10min	3 min	5min	10min

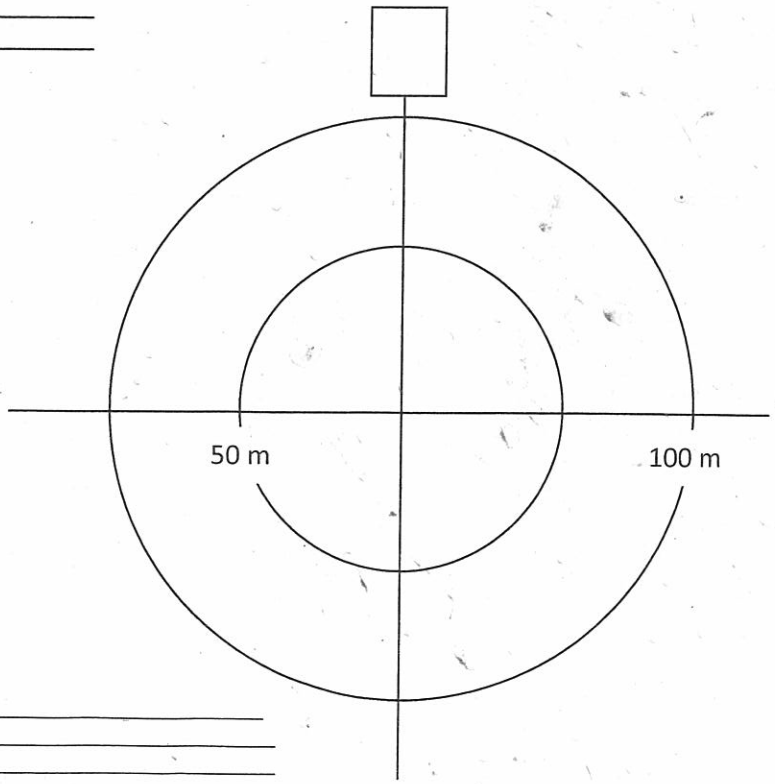

Notes/Incidental observations:

Project Number:
Survey Date:

AMEC Earth & Environmental
160 Traders Blvd East, Mississauga, ON L4Z 3K7
Tel: (905) 568-2929
Cell: (416) 459-6228
Fax: (905) 568-1686

Other Wildlife Observations **Species at Risk

Obs?	Species	Waypoint	Notes
	Virginia Opossum		
	Shrew sp		
	Star-nosed Mole		
	Bat Sp.		
	Eastern Cottontail		
	Snowshoe Hare		
	European Hare		
	Eastern Chipmunk		
	Woodchuck		
	Grey Squirrel		
	Red Squirrel		
	Flying Squirrel sp		
	Beaver		
	Mouse sp		
	Muskrat		
	Meadow Vole		
	Porcupine		
	Coyote		
	Grey Wolf		
	Red Fox		
	Black Bear		
	Raccoon		
	Mink		
	Striped Skunk		
	White-tailed Deer		
	Moose		
	Snapping Turtle**		
	Midland Painted Turtle		
	Western Painted Turtle		
	Northern Map Turtle**		
	Blanding's Turtle**		
	Eastern Gartersnake		
	East. Ribbon Snake**		
	Northern Watersnake		
	Redbelly Snake		
	Brown Snake		
	Smooth Greensnake		
	Ringneck Snake		
	Eastern Milksnake**		
	Red-spotted Newt		
	Bl.-spotted Salamander		
	Spotted Salamander		
	Four-toed Salamander		
	Northern Redback		
	American Toad		
	Western Chorus Frog**		
	Boreal Chorus Frog		
	Spring Peeper		
	Gray Treefrog		
	Bullfrog*		
	Northern Green Frog		
	Wood Frog		
	Northern Leopard Frog		
	Mink Frog		

Other Species	Waypoint	Notes

Notes

AMEC Earth & Environmental
160 Traders Blvd East, Mississauga, ON L4Z 3K7
Tel: (905) 568-2929
Cell: (416) 459-6228
Fax: (905) 568-1686

Breeding Bird Point Count Survey

Project Name: IAMGOLD		Project Number: TC121522	
Crew Leader:	Observers: Jon Pleizier		
Date: May 30, 2013	Start Time (24hr): 05:20	End Time (24hr): 10:50	
Weather: 0% cloud.	Temperature: 10°C -	Wind: 0 -	Precipitation (Circle): (0 None) 1 Haze/Fog 2 Drizzle 3 Rain

Point Count Name: BB89.
UTM:
Start Time 05:34
Habitat:

Species	<50m			<100m			>100m		
	3min	5min	10min	3min	5min	10min	3 min	5min	10min
WTSP	1			111					
WIWR	11								
NOPA									
BBWA	1								
BTNW					1				
AMCR								1	
BTBW			1			1			
GCKI			1						
BRCR			1						
SWTH			1						
MAWA						1			
RCKI									1
woodpecker									1
YBSA			1						
NAWA			1						

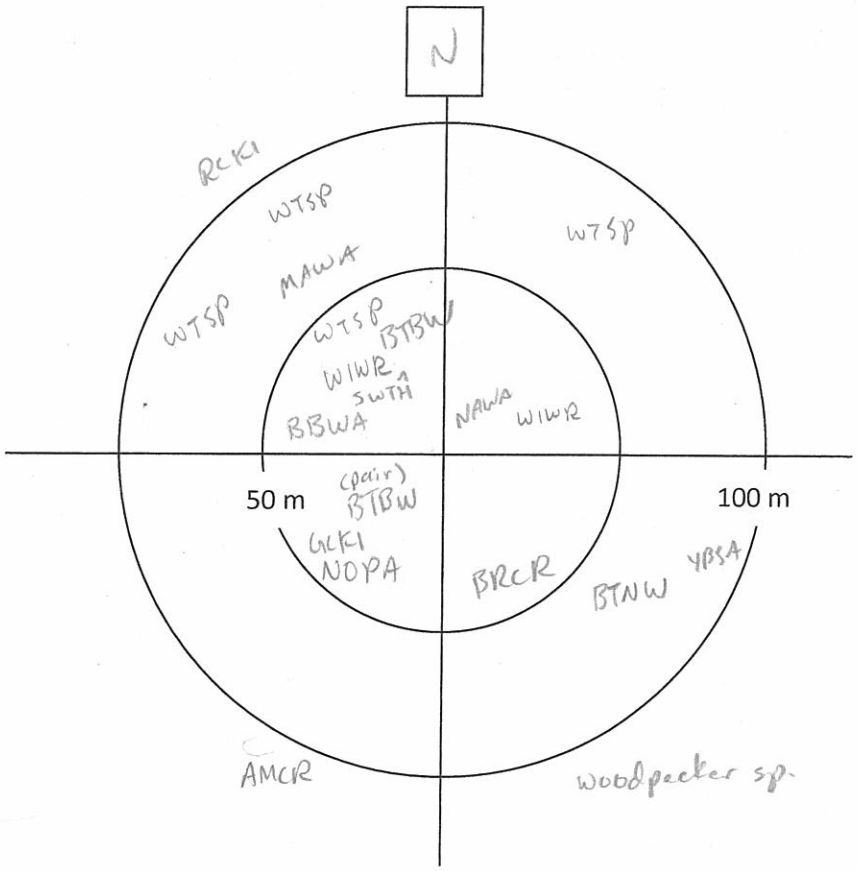

Birch, balsam, E. w. cedar
ES 7c or ES 9r.

Notes/Incidental observations:
moose scat, snowshoe hare on access rd.
BTBW + BTNW en route.
BRCR

Project Number: TC1215-22
Survey Date: May 29, 2013

AMEC Earth & Environmental
160 Traders Blvd East, Mississauga, ON L4Z 3K7
Tel: (905) 568-2929
Cell: (416) 459-6228
Fax: (905) 568-1686

Point Count Name: BB86
UTM: _____
Start Time 06:05
Habitat: ESSF,

Species	<50m			<100m			>100m		
	3min	5min	10min	3min	5min	10min	3 min	5min	10min
RCKI	1								
SOVI	1								
YBSA	1			1					
WIWR	1			11					
HETH				1					
YRWA				1					
RBNU				1					
WTSP						1		1	
GCKI		1							
woodpecker sp.								1	
BLBW			1						
MAWA			1						

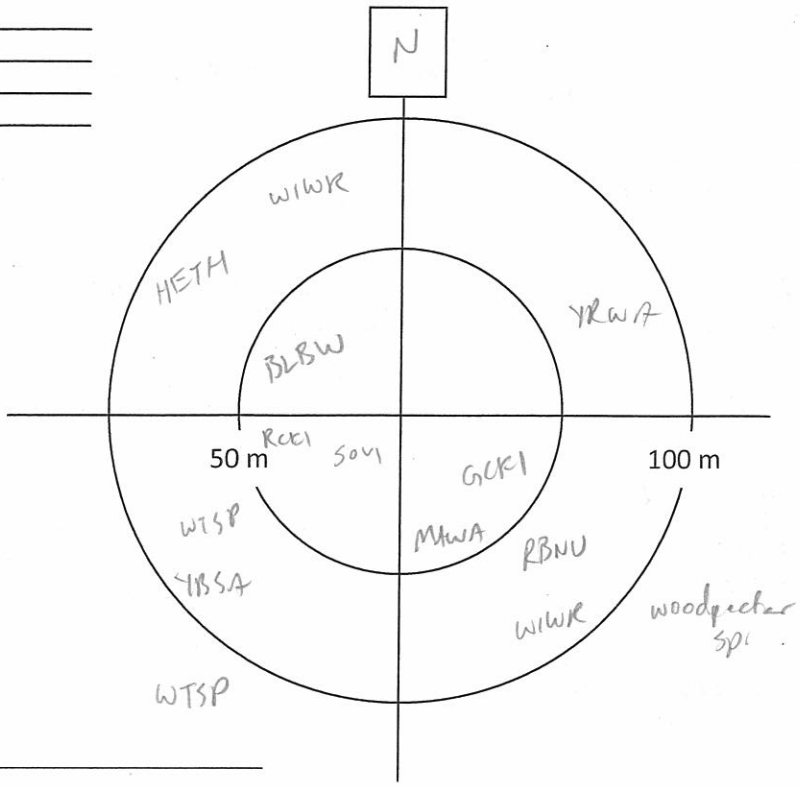

Notes/Incidental observations: _____

Point Count Name: BB84
UTM: _____
Start Time 06:31
Habitat: Bw, Ce, Sb, feathermoss, bunchberry

Species	<50m			<100m			>100m		
	3min	5min	10min	3min	5min	10min	3 min	5min	10min
OVEN	1								
NOPA					1				
WIWR					1				
SOVI					1				
BTNW		1							
MAWA						1			
YRWA						11			

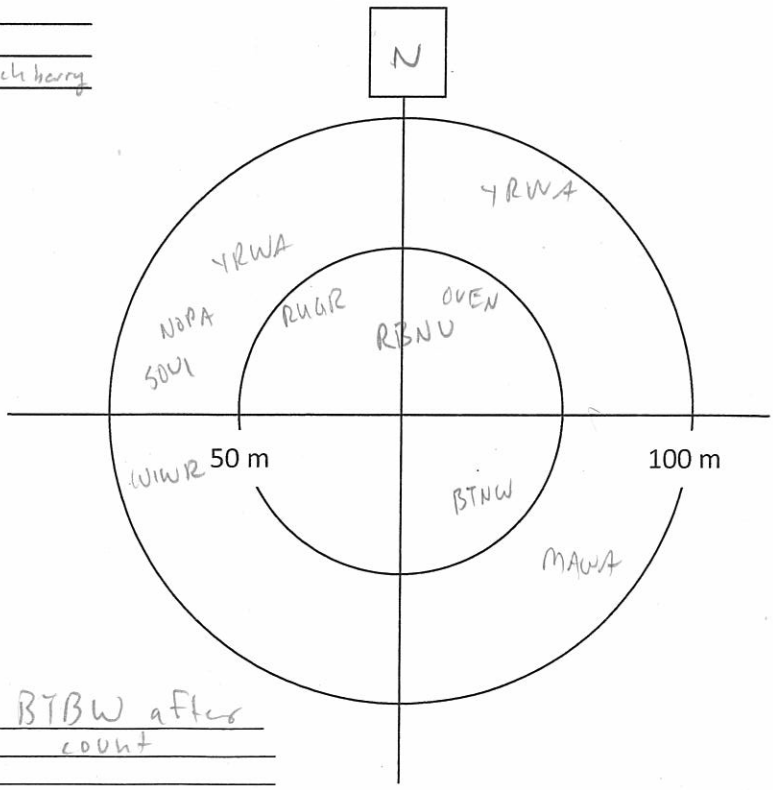

Notes/Incidental observations: SCTA enroute, BTBW after count
RESQ

Mature forest
ES 9r

Project Number: TC121522
Survey Date: May 29, 2013

AMEC Earth & Environmental
160 Traders Blvd East, Mississauga, ON L4Z 3K7
Tel: (905) 568-2929
Cell: (416) 459-6228
Fax: (905) 568-1686

Point Count Name: BB83
UTM: _____
Start Time 06:58
Habitat: ES 9r

Species	<50m			<100m			>100m		
	3min	5min	10min	3min	5min	10min	3 min	5min	10min
OSPR									
BEFI									
RBNU				1					
OVEN				1					
BHVI				1					
GCKI	1			1					
NAWA	1								
RUGR					1				
YRWA		1			1				
YBSA				1	1				
BRCR						1			
LEFL			1						

FI
FI

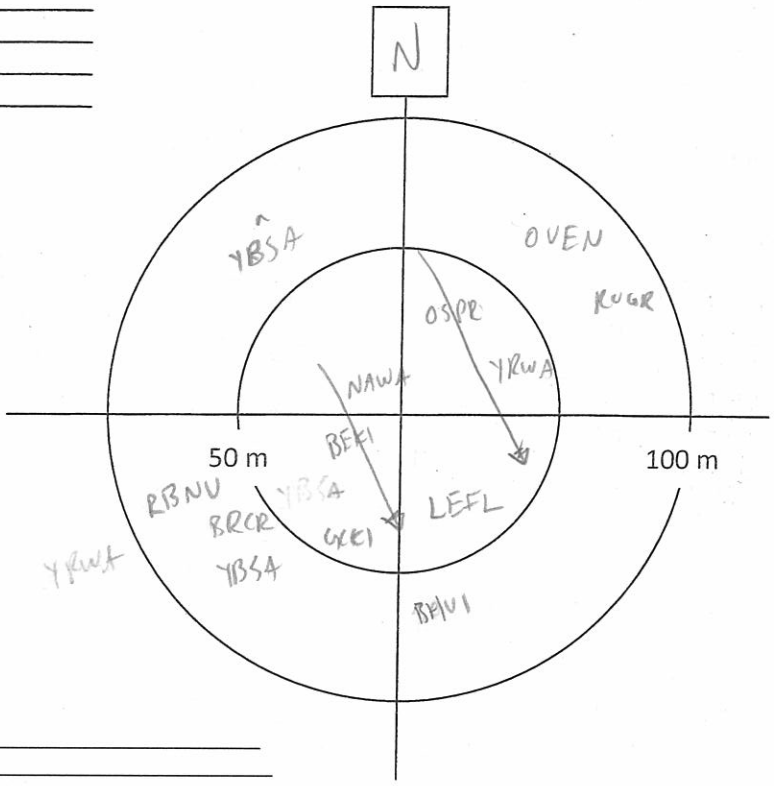

Notes/Incidental observations: _____

Point Count Name: BB85
UTM: _____
Start Time 07:19
Habitat: ES 9r - cedar + birch

Species	<50m			<100m			>100m		
	3min	5min	10min	3min	5min	10min	3 min	5min	10min
REVI	1			1					
NOPA				1					
OVEN	1			1					
RBNU									
BCCH				1					
BTNW	1								
BBWA				1					
YRWA					1			1	
DOWO					1				
YBSA			1						

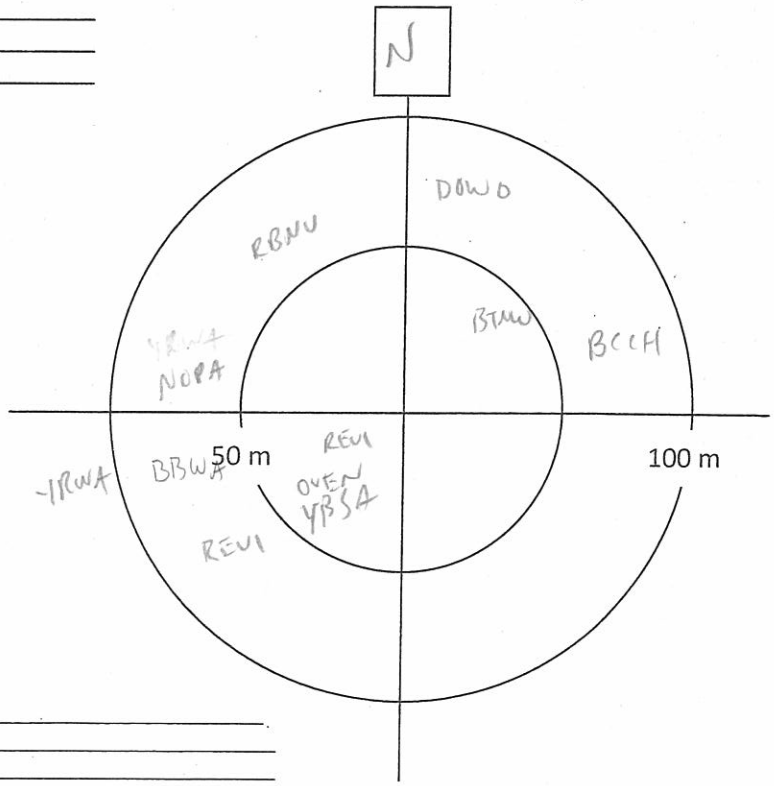

Notes/Incidental observations: Moose scat

Project Number: TC121522
Survey Date: May 29, 2013

AMEC Earth & Environmental
160 Traders Blvd East, Mississauga, ON L4Z 3K7
Tel: (905) 568-2929
Cell: (416) 459-6228
Fax: (905) 568-1686

Point Count Name: BB87
UTM:
Start Time 07:41
Habitat: Birch dom - ES3

Species	<50m			<100m			>100m		
	3min	5min	10min	3min	5min	10min	3 min	5min	10min
NAWA	1			5					
WIWR				1					
WTSP				11					
BLJA	1								
MAWA	11								
HETH				1					
LEFL				1					
BTBW	1			.					
RUGR					1				
RCKI				1					

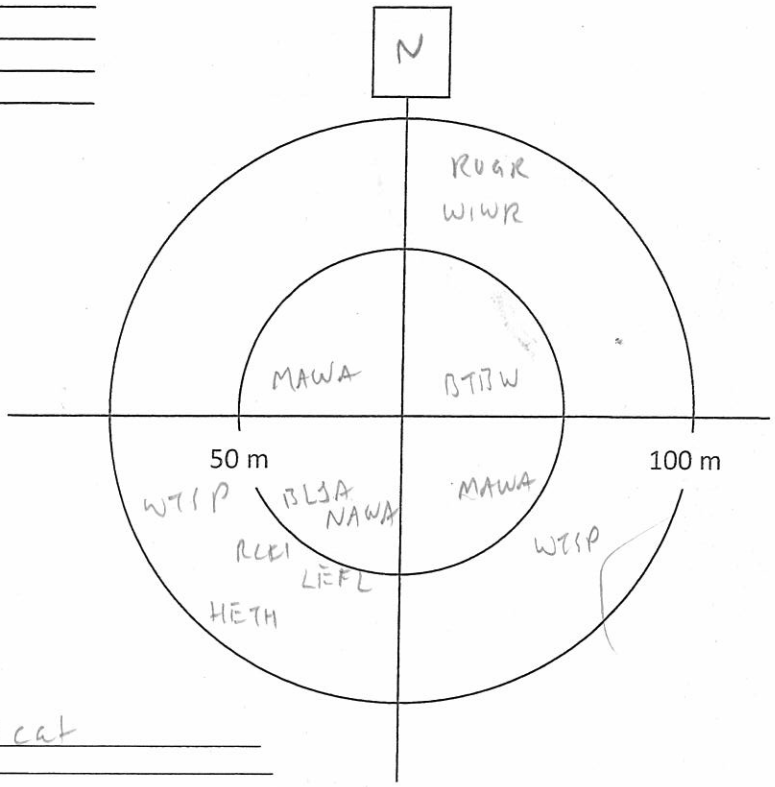

Notes/Incidental observations: RESQ, moose scat

Point Count Name: BB88
UTM: 08:06
Start Time
Habitat: ES3

Species	<50m			<100m			>100m		
	3min	5min	10min	3min	5min	10min	3 min	5min	10min
OVEN	1								
NOPA				1					
LEFL	1				1				
GCKI	1								
WTSP				1					
HETH							1		
RBNU				1					
BAWW				1					
WIWR				1					
YRWA					1				
RBNU						1			

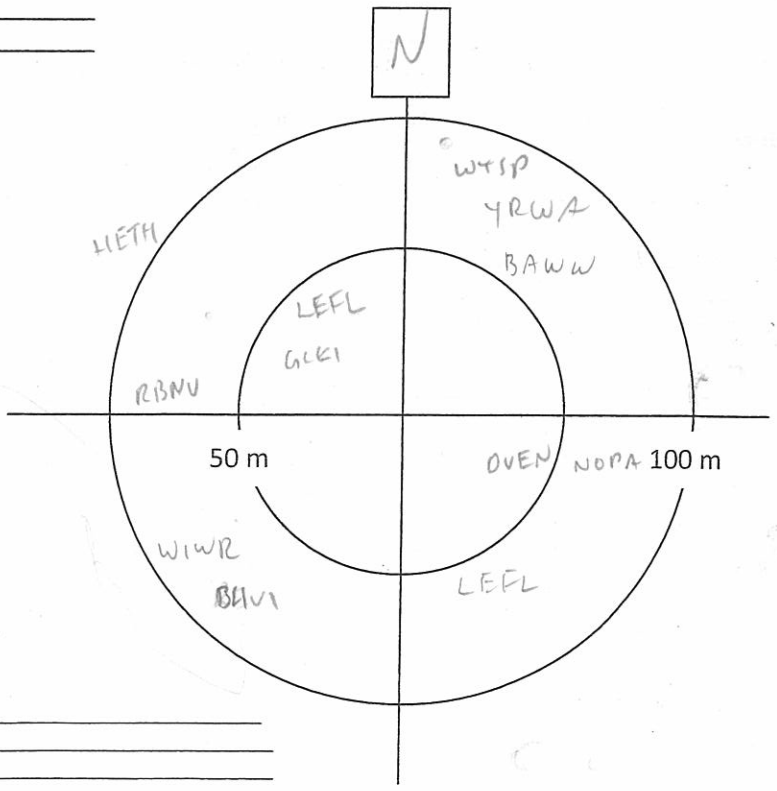

Notes/Incidental observations: RESQ

wpt 015 - EHH - Ash swamp - rare yellow birch.

AMEC Earth & Environmental
160 Traders Blvd East, Mississauga, ON L4Z 3K7
Tel: (905) 568-2929
Cell: (416) 459-6228
Fax: (905) 568-1686

Project Number: TC121522
Survey Date: May 29, 2013

Point Count Name: ~~BB90~~
UTM:
Start Time 08:37
Habitat: Black Ash - wet

Species	<50m			<100m			>100m		
	3min	5min	10min	3min	5min	10min	3 min	5min	10min
WIWR	1								
LBNU	1								
BRCR	1								
BTBW	1								
OVEN				1					
BCCH	1								
BTNW	1			11					
BHVI					1				
DOWO		1							
EVGR					1				
COLO									11
MAWA									1
GCKI			1			1			
~~RBNU~~									

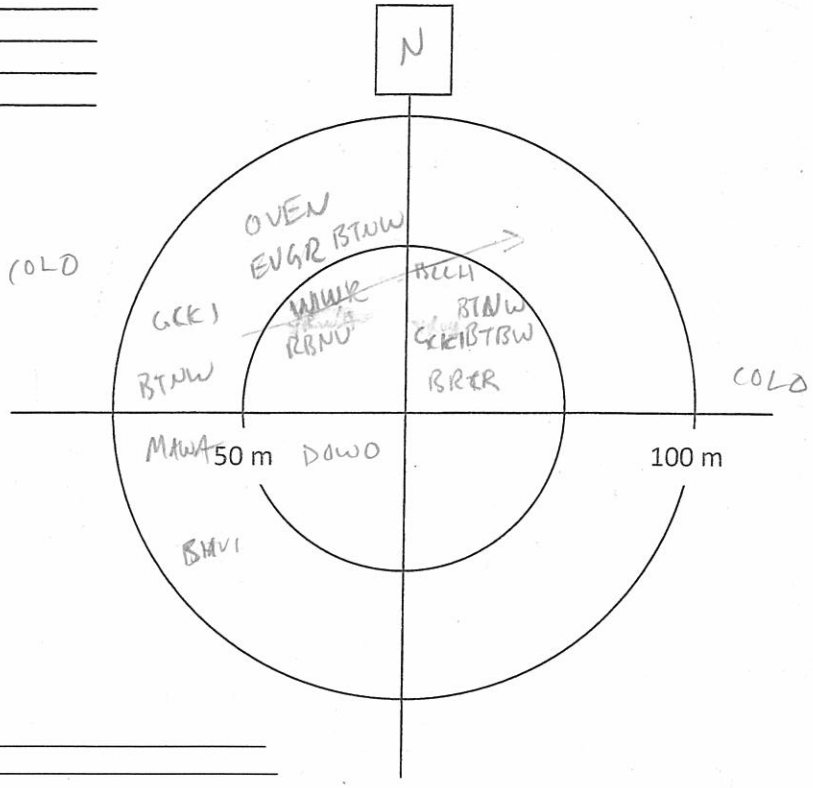

Notes/Incidental observations:

Point Count Name: BB93 - changed location
UTM: 17T 432164, 5268834
Start Time 09:09
Habitat: ES11/ES14, ES5

Species	<50m			<100m			>100m		
	3min	5min	10min	3min	5min	10min	3 min	5min	10min
RBNU				1					
NAWA									
OVEN				11					
SWTH				1					
WTSP				1		1	1		
GCKI	1								
SPWR	1								

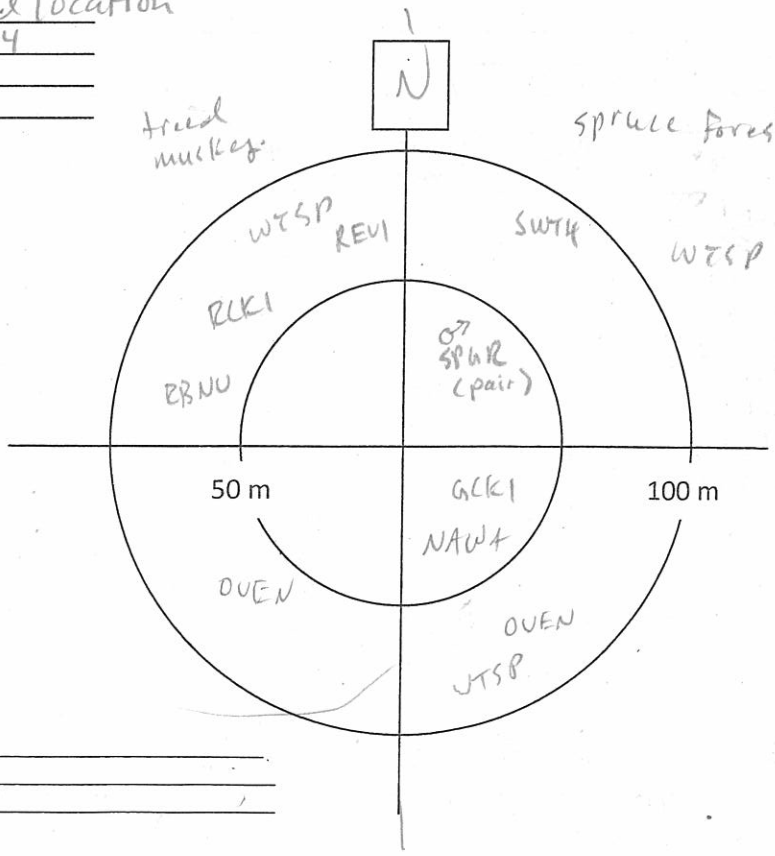

Notes/Incidental observations: en route - ALFL

wpt 016 - E414 - spruce grouse nest (5 eggs)

AMEC Earth & Environmental
160 Traders Blvd East, Mississauga, ON L4Z 3K7
Tel: (905) 568-2929
Cell: (416) 459-6228
Fax: (905) 568-1686

Project Number: TC121522
Survey Date: May 29, 2013

Point Count Name: BB94
UTM: _____
Start Time 09:59
Habitat: _____

Species	<50m			<100m			>100m		
	3min	5min	10min	3min	5min	10min	3 min	5min	10min

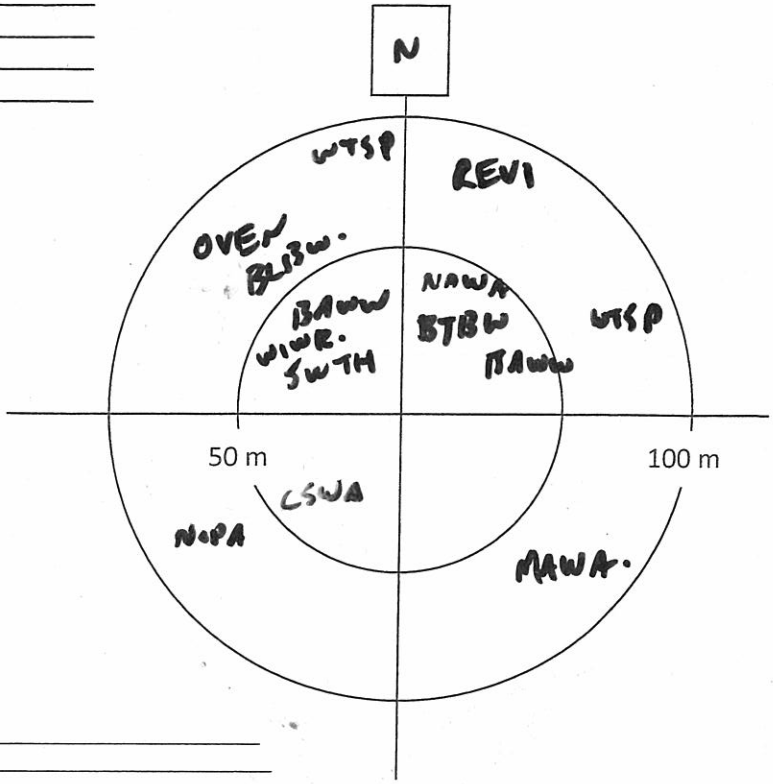

Notes/Incidental observations: _____

Point Count Name: BB92
UTM: upt 014 - E414
Start Time 10:35
Habitat: ES11/ES14

Species	<50m			<100m			>100m		
	3min	5min	10min	3min	5min	10min	3 min	5min	10min
GCKI				1					
RCKI				1					
HETH				1					1
COYE	1								
MAWA				1					
NOFL				1					
CORA									
YBSA								1	
WTSP			1						

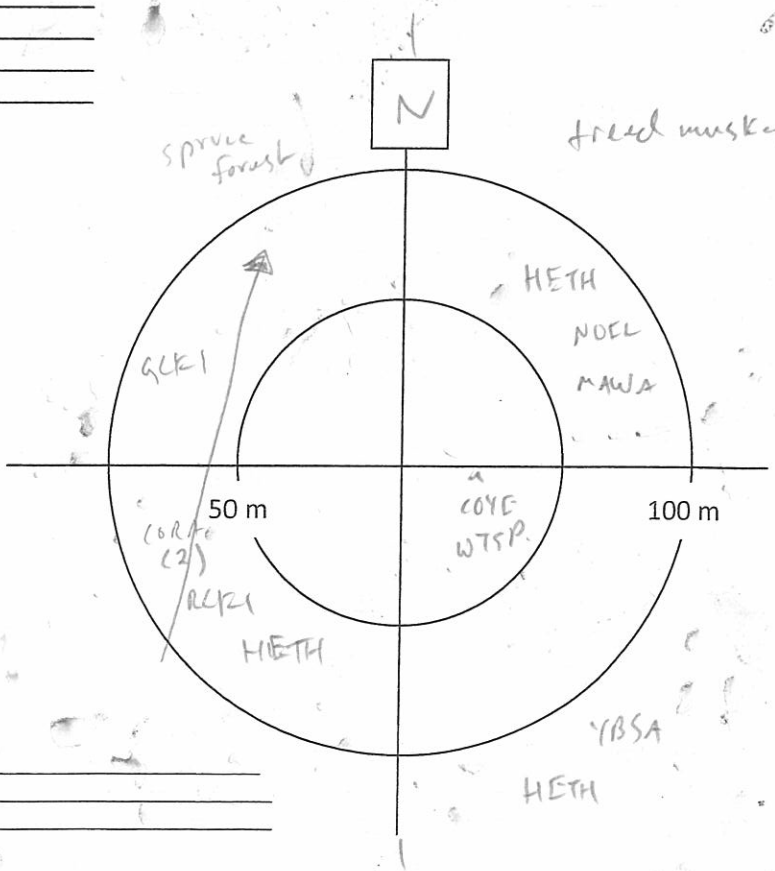

Notes/Incidental observations: RESQ
en route - BOCH

AMEC Earth & Environmental
160 Traders Blvd East, Mississauga, ON L4Z 3K7
Tel: (905) 568-2929
Cell: (416) 459-6228
Fax: (905) 568-1686

Breeding Bird Point Count Survey

Project Name: IMG COTE		Project Number: TC121522	
Crew Leader: JB	Observers: JB		
Date: 30-MAY-2013	Start Time (24hr): 5:39	End Time (24hr): 10:45	
Weather: GOOD	Temperature:	Wind: 0-1	Precipitation (Circle): (0) None 1 Haze/Fog 2 Drizzle 3 Rain

Point Count Name: B166
UTM:
Start Time 5:39 - 5:49
Habitat: ES7c ? ~Bw40 Sw40 Bf20

Species	<50m			<100m			>100m		
	3min	5min	10min	3min	5min	10min	3 min	5min	10min
DOWO			1						
NAWA	1								
YBSA	1								
GCKI	1								
RUGR				1					
RBNU					1				
BTNW				11					
RBGR						1			
HETH						1			
BTBW						1			
OVEN				1			1		
NOFL							11		
WIWR							1		
BAOW								1	
REVI							1		

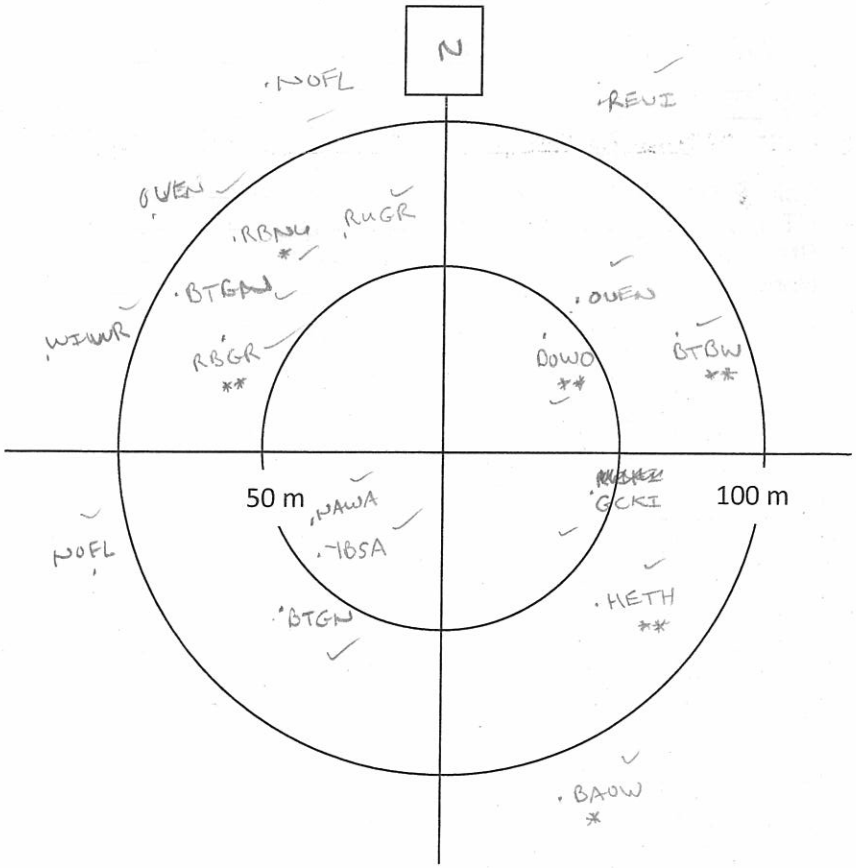

Notes/Incidental observations:

Project Number: IMG
Survey Date: 30-MAY-2013

AMEC Earth & Environmental
160 Traders Blvd East, Mississauga, ON L4Z 3K7
Tel: (905) 568-2929
Cell: (416) 459-6228
Fax: (905) 568-1686

Point Count Name: B165
UTM:
Start Time 6:05-6:15
Habitat: ~~BLANK~~ ES7c - SAME AS B166

Species	<50m			<100m			>100m		
	3min	5min	10min	3min	5min	10min	3 min	5min	10min
WIWR	1								
REVI				11					
NOPA				1		1	1		
RBNU				1					
YBSA				1					1
BTNW				1	1	1		1	
RUGR						1			
PUFI						1			
BTBW						1			
GCKI				1					
COLO							1		
WIWR								1	
OVEN									1

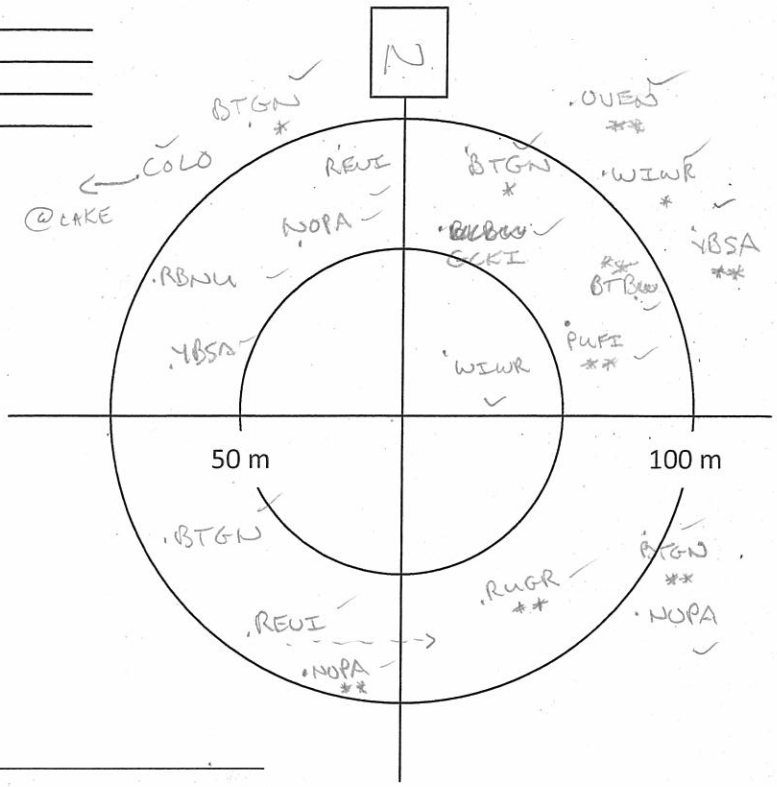

Notes/Incidental observations:
PHOTO 953

Point Count Name: B164
UTM:
Start Time ~~6:25~~ 6:26-6:36
Habitat: At30 Bw30 Mr10 Bf10 Sw10 - MATURE At + Bw SOME Mr
ES7m?

Species	<50m			<100m			>100m		
	3min	5min	10min	3min	5min	10min	3 min	5min	10min
REVI	11								
OVEN				11		1			
DOWO						1			
VEER				1					
BTBW						1			
NOPA					1				
RUGR						1			
SWTH				1					
RBNU							1		
YBSA									1

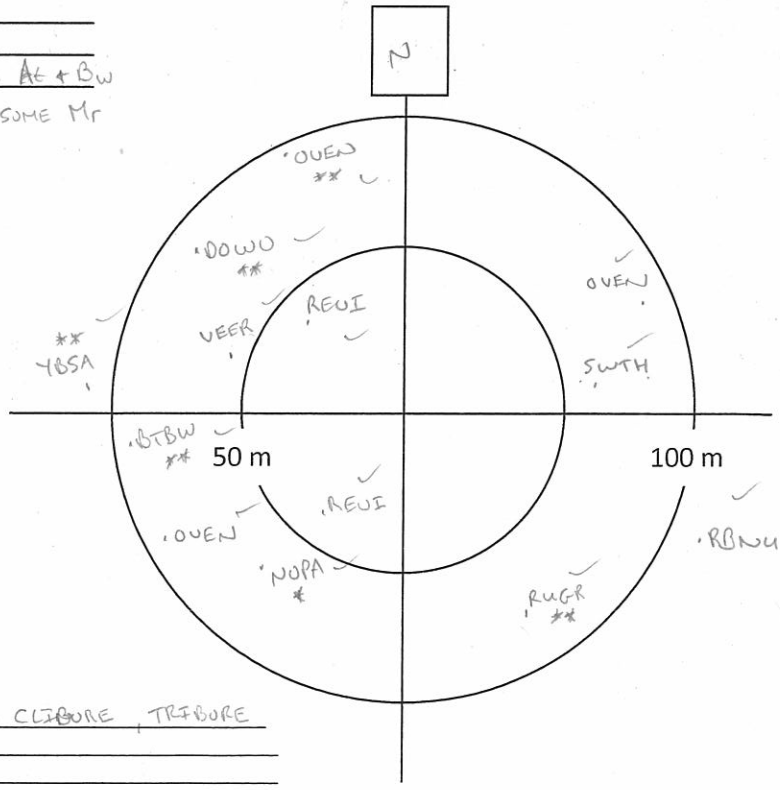

Notes/Incidental observations: MAICANA ABUNDANT, CLIBORE, TRIBORE
PHOTO 954

Project Number: IMG
Survey Date: 30 MAY 2013

AMEC Earth & Environmental
160 Traders Blvd East, Mississauga, ON L4Z 3K7
Tel: (905) 568-2929
Cell: (416) 459-6228
Fax: (905) 568-1686

Point Count Name: B163
UTM:
Start Time 6:50 - 7:00
Habitat: SAME AS B164

Species	<50m			<100m			>100m		
	3min	5min	10min	3min	5min	10min	3 min	5min	10min
REVI	1			1					
BAWW	1						1		
NOPA					1				
OVEN						1			
TEWA						1			
RUGR						1			
YRWA					1				
DOWO					1				
NAWA							1		
WTSP									1

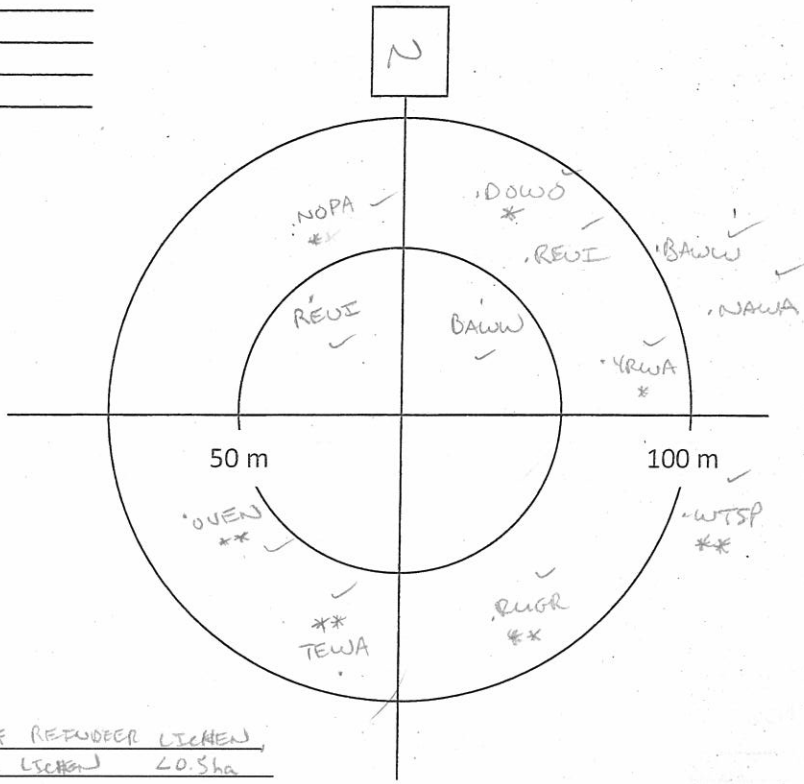

Notes/Incidental observations: SMALL MICRO-HABITAT OF REINDEER LICHEN, Pw, CORAL LICHEN <0.5ha
OLD HOMESTEAD, ONLY BRICKS LEFT

Point Count Name: B161
UTM:
Start Time 7:11 - 7:21
Habitat: At_{90} Bf_5 Sw_5 - RL.DOG, LONICERA SP
SHRUBY Mm

Species	<50m			<100m			>100m		
	3min	5min	10min	3min	5min	10min	3 min	5min	10min
DOWO	1								
NOPA	1				1				
BTBW	1								
AMRE						1			
MAWA				11					
NAWA				1	1				
PIWO				1					
LEFL				1					
REVI				1					
WIWR									1
CANG								11	

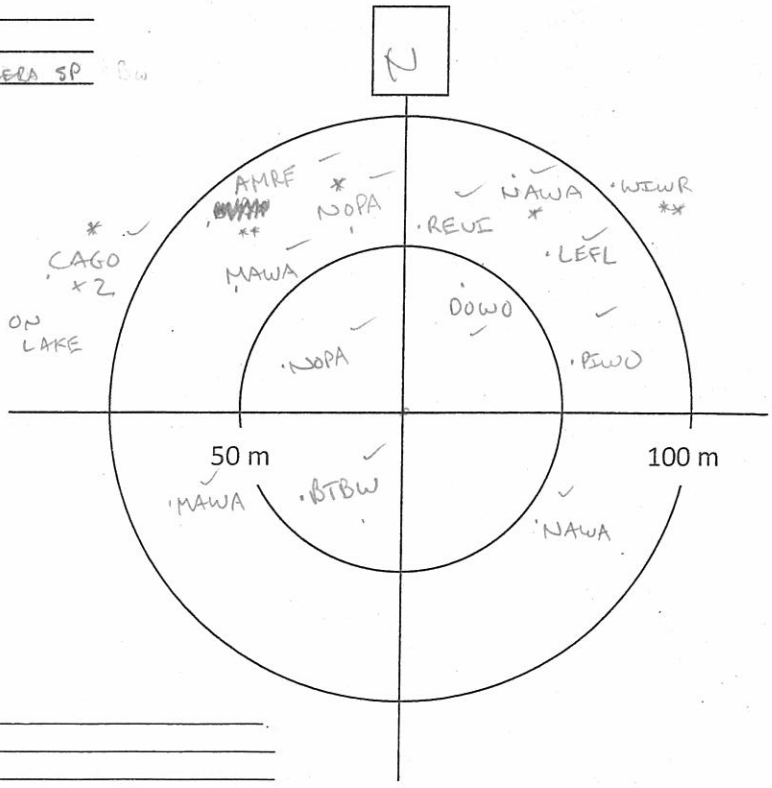

Notes/Incidental observations:

Project Number: IMG
Survey Date: MAY 30/2013

AMEC Earth & Environmental
160 Traders Blvd East, Mississauga, ON L4Z 3K7
Tel: (905) 568-2929
Cell: (416) 459-6228
Fax: (905) 568-1686

Point Count Name: B158
UTM:
Start Time 7:35-7:45
Habitat: SAME AS 163 +164

Species	<50m			<100m			>100m		
	3min	5min	10min	3min	5min	10min	3 min	5min	10min
REVI	1			1					
DOWO	1								
NOPA	1								
BTBW	1								
YBSA					1				
OVEN				1					1
AMRE				1					
BTBW						1			
LEFL					11				
RUGR						1			
PIWO									1
CAWA									1
WIWR								1	

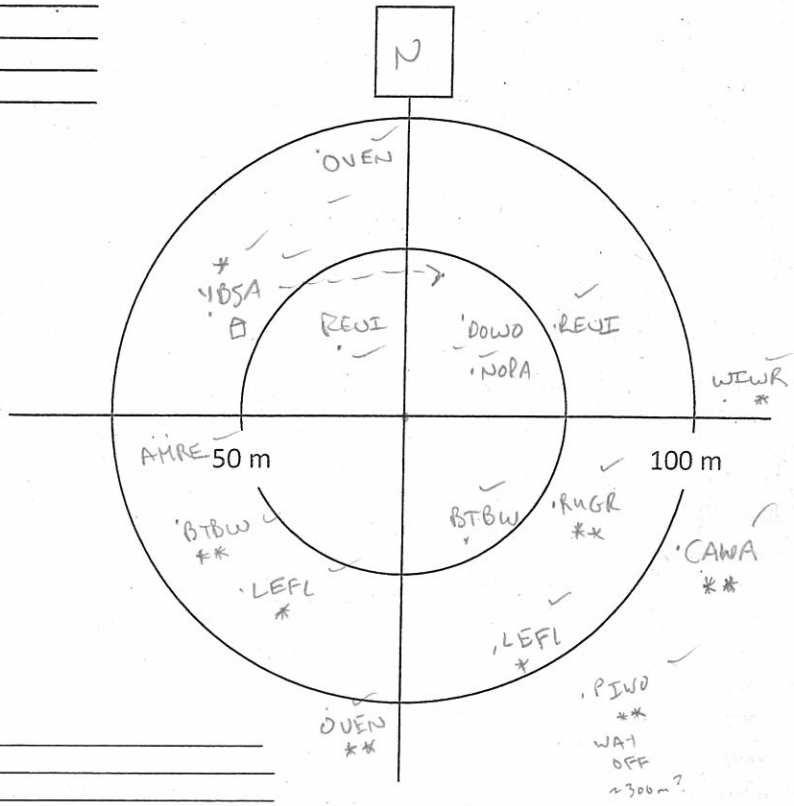

Notes/Incidental observations:

Point Count Name: B159
UTM:
Start Time 7:55-8:05
Habitat: SAME AS 158, 163, 164 - MATURE

Species	<50m			<100m			>100m		
	3min	5min	10min	3min	5min	10min	3 min	5min	10min
YBSA	1			1					
OVEN			1	1					
WIWR	1								1
NOPA	1								
MAWA				1	1				
RUGR						1			
REVI				1					
HETH				1					
BCCH						1			
GCKI					1				
NAWA						1			
RBNU								1	
NOPA									1

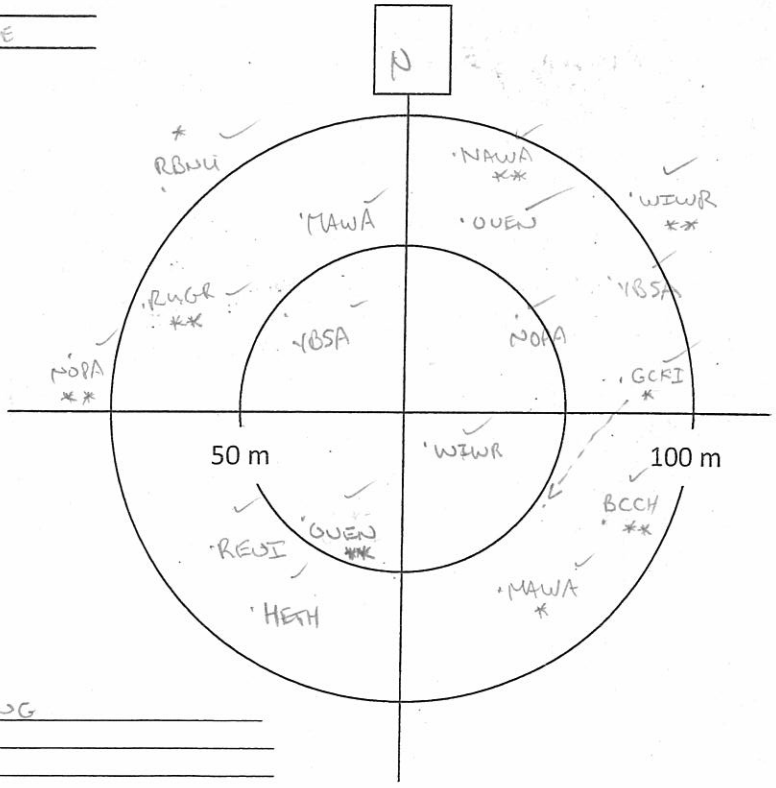

Notes/Incidental observations: YBSA BOTH DRUMMING
MOOSE DROPPING

Project Number: 3MG
Survey Date: MAY 30/2013

AMEC Earth & Environmental
160 Traders Blvd East, Mississauga, ON L4Z 3K7
Tel: (905) 568-2929
Cell: (416) 459-6228
Fax: (905) 568-1686

Point Count Name: B156
UTM: _____
Start Time 8:17 - 8:27
Habitat: YOUNG, OPEN Bw40 At10 Bf10 Sw10 Sb5

Species	<50m			<100m			>100m		
	3min	5min	10min	3min	5min	10min	3 min	5min	10min
YRWA						1			
NAWA	1								
GCKI	1								
OVEN	1			1	1				
NOPA			1						
REVI	1								
RBNU				1		1			
SWTH	1			1					
CAWA				1					
YBSA									1
NAWA				1					
BLJA					1				

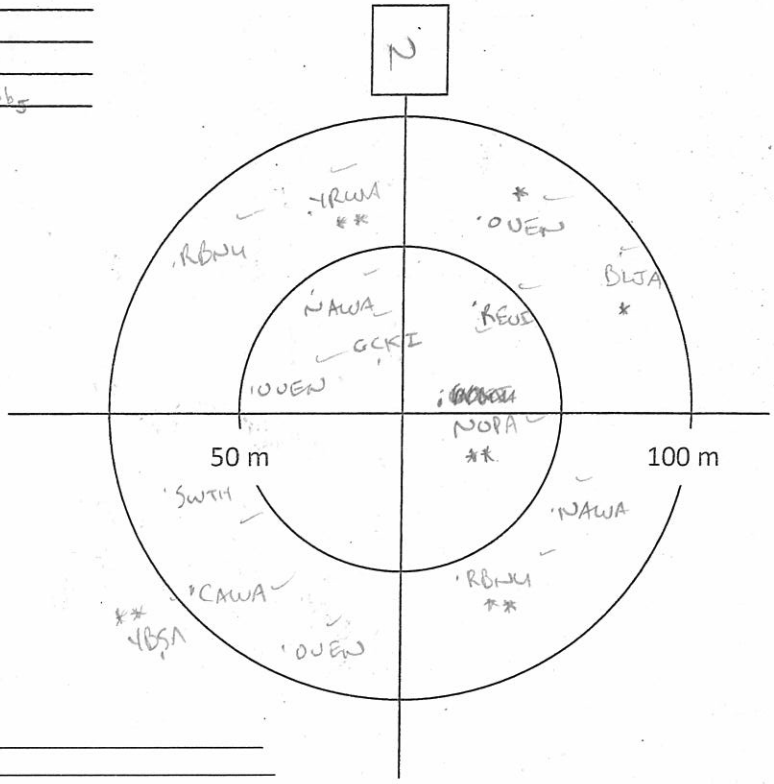

Notes/Incidental observations: _____

Point Count Name: B154
UTM: _____
Start Time 8:38 - 8:48
Habitat: MIXED - At30 Bw20 Bf30 S20
LONICERA, MAICANA, LYCOPODIUM

Species	<50m			<100m			>100m		
	3min	5min	10min	3min	5min	10min	3 min	5min	10min
NAWA	1			1					
BHVI	1								
BCCH						1			
REVI					1		1		
DOWO				1					
OVEN				1					
YBSA							1		
RBNU						1			
BWHA									1
MAWA				11					
BTNW						1			

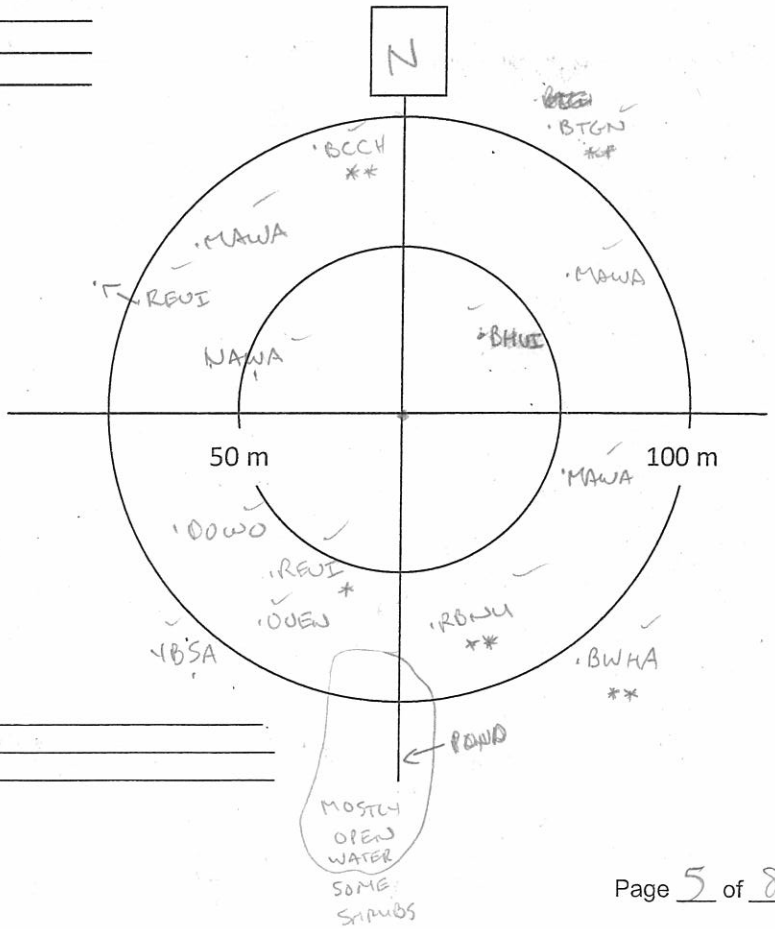

Notes/Incidental observations: _____

Project Number: IMG
Survey Date: MAY 30/2013

AMEC Earth & Environmental
160 Traders Blvd East, Mississauga, ON L4Z 3K7
Tel: (905) 568-2929
Cell: (416) 459-6228
Fax: (905) 568-1686

Point Count Name: B157
UTM:
Start Time 9:03 - 9:13
Habitat: NARROW DRAINAGE W/ REGENERATION, BETULE SURROUNDED BY UPLAND AT Bw & Sw BF (MIXED FOREST)

Species	<50m			<100m			>100m		
	3min	5min	10min	3min	5min	10min	3 min	5min	10min
RCKI	1								
CAWA			1						
OOWO	1								
MAWA	1				1				
WTSP					1				
REVI				1	1		1		
RUGR				1					
PIWO				1					
OVEN				1					
BTNW				1		1			
NOPA						1			
YBSA						1			
BLJA					1				
MAWA					1				
WTSP							1		

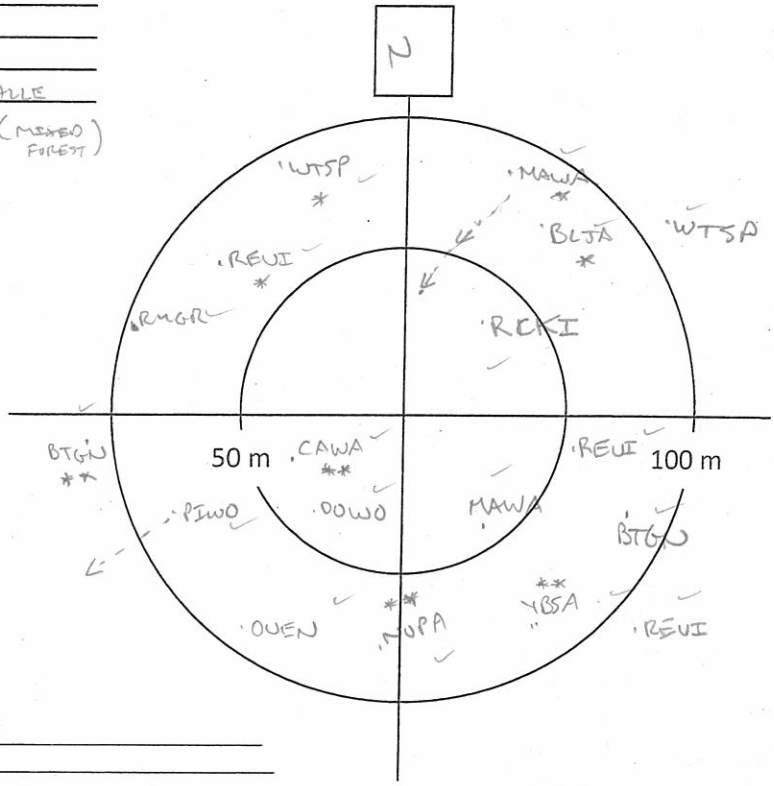

Notes/Incidental observations:

Point Count Name: B155
UTM:
Start Time 9:23 - 9:33
Habitat: HYDRO CORRIDOR - BRACKEN / SW / PIN CHERRY / GAULTHERIA / VACANGU

Species	<50m			<100m			>100m		
	3min	5min	10min	3min	5min	10min	3 min	5min	10min
MAWA	1			1	1			1	
REVI					1				
BLJA						1			
RCKI				11					
NAWA				1					
AMCR		•							1
HETH							11		
NOWA				1					
WTSP									1
RBNU									1

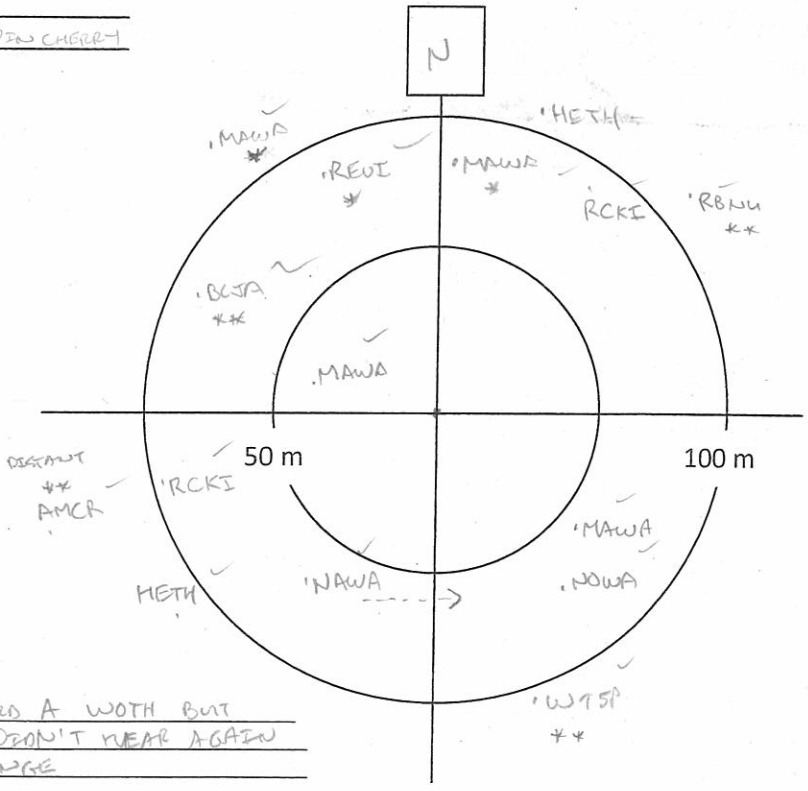

Notes/Incidental observations: I SWEAR I HEARD A WOTH BUT ONLY A SMALL PART. DIDN'T HEAR AGAIN WOULD BE NORTH OF RANGE

Project Number: IMC
Survey Date: MAY 30/2013

STORM APPROACHING

AMEC Earth & Environmental
160 Traders Blvd East, Mississauga, ON L4Z 3K7
Tel: (905) 568-2929
Cell: (416) 459-6228
Fax: (905) 568-1686

Point Count Name: B160
UTM: REVISED - SEE GPS
Start Time 9:43-9:53
Habitat: SAME AS B154

Species	<50m			<100m			>100m		
	3min	5min	10min	3min	5min	10min	3 min	5min	10min
BHVI	1								
RCKI	1								
NOPA	1			1					
NAWA			1	1					
BTNW				1					
OVEN				1		1			
REVI				1					
BAWW				1	1				
CORA									1

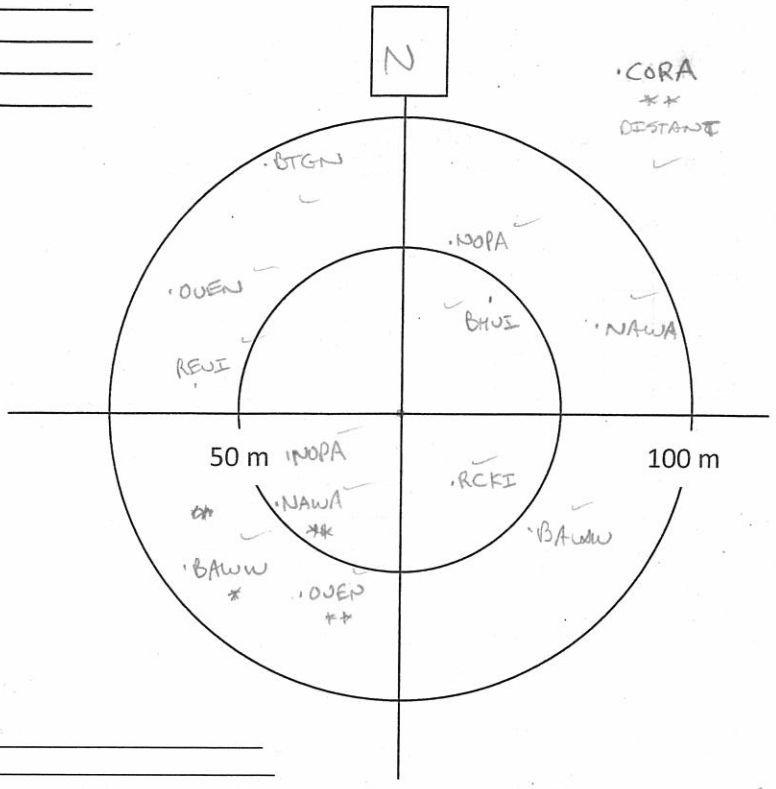

Notes/Incidental observations:

Point Count Name: B162
UTM:
Start Time 10:03-10:13
Habitat: SAME AS B164 - W/ MF

Species	<50m			<100m			>100m		
	3min	5min	10min	3min	5min	10min	3 min	5min	10min
YRWA	1								
MAWA			1						
NOPA				11					
BTNW				1	1				
REVI				1					
NAWA				1					

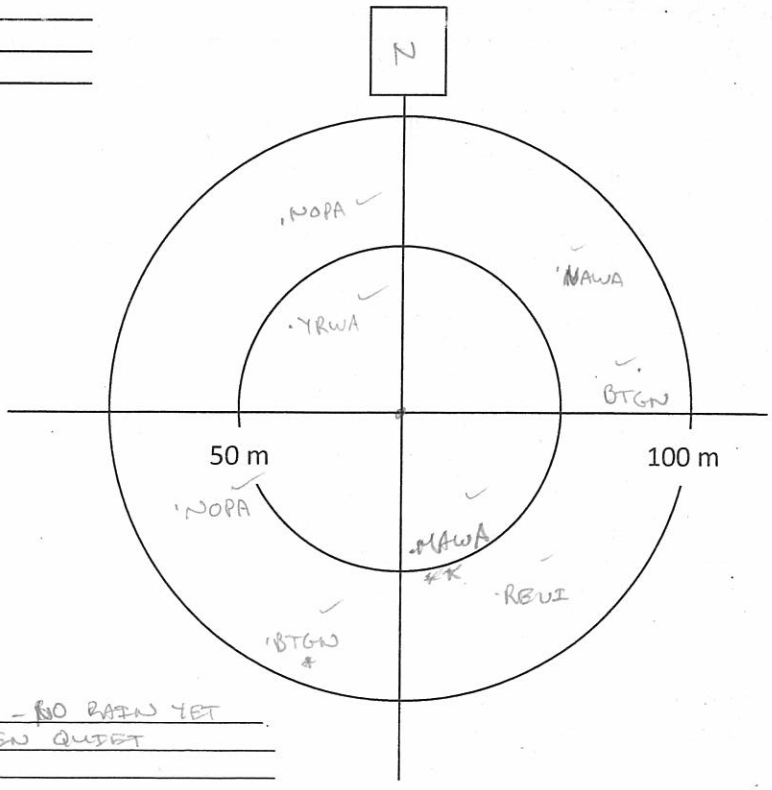

Notes/Incidental observations: THUNDER APPROACHING - NO RAIN YET
BUT BIRDS HAVE GOTTEN QUIET

Project Number: IMG — RAIN DELAY NOW STOPPED
Survey Date: MAY 30/2015

AMEC Earth & Environmental
160 Traders Blvd East, Mississauga, ON L4Z 3K7
Tel: (905) 568-2929
Cell: (416) 459-6228
Fax: (905) 568-1686

Point Count Name: BL68
UTM:
Start Time 10:25-10:35
Habitat: SAME AS BL64 - W/ M.

Species	<50m			<100m			>100m		
	3min	5min	10min	3min	5min	10min	3 min	5min	10min
OVEN	1			1		1			1
BHVI	1								
WIWR	1								
RBNU				1	1				
BTNW					1				
REVI				1					
NOPA				1					
MAWA				1					
DOWO						1			
HETH						1			
RUGR				1					
BAWW				1					

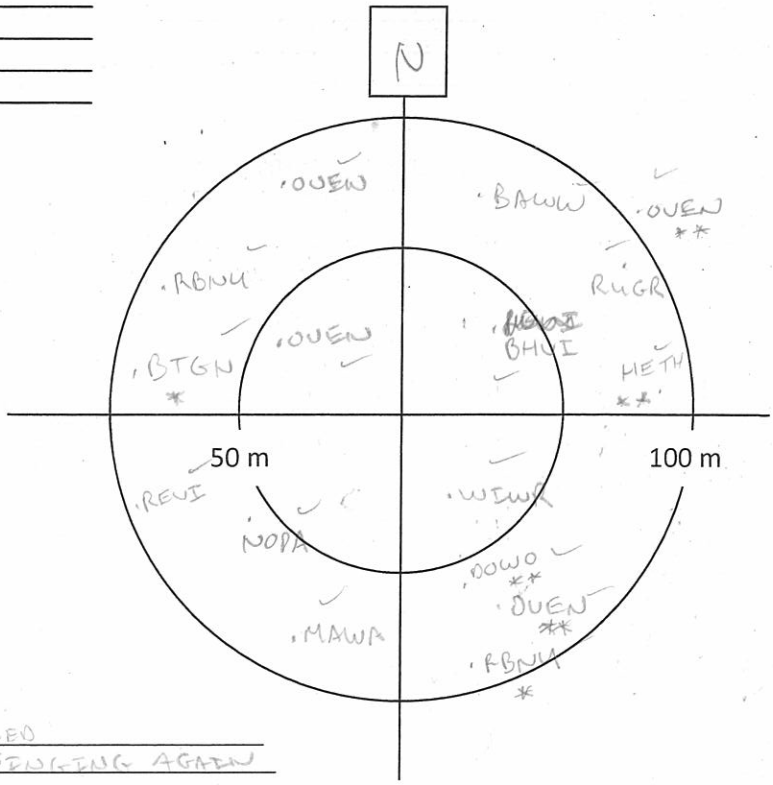

Notes/Incidental observations: THUNDERSTORM ROLLED IN FOR 10 MIN. BIRDS SINGING AGAIN

Point Count Name:
UTM:
Start Time
Habitat:

Species	<50m			<100m			>100m		
	3min	5min	10min	3min	5min	10min	3 min	5min	10min

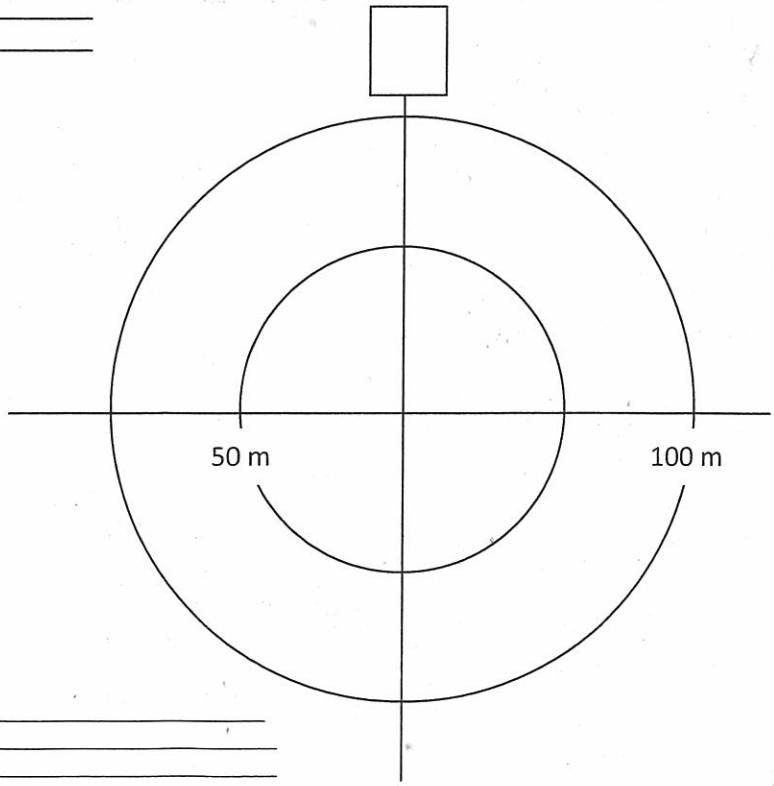

Notes/Incidental observations:

AMEC Earth & Environmental
160 Traders Blvd East, Mississauga, ON L4Z 3K7
Tel: (905) 568-2929
Cell: (416) 459-6228
Fax: (905) 568-1686

Breeding Bird Point Count Survey

Project Name: IAMGOLD		Project Number: TL121522	
Crew Leader:	Observers: Jon Pleizier		
Date: May 31, 2013	Start Time (24hr): 05:35	End Time (24hr): 10:00	
Weather: cloud cover	Temperature:	Wind: 1	Precipitation (Circle): 0 None, 1 Haze/Fog, 2 Drizzle, 3 Rain

Point Count Name: BB135
UTM: 039-17T 0467056, 5282344
Start Time 05:46
Habitat: Sb, Pj Forest

Species	<50m			<100m			>100m		
	3min	5min	10min	3min	5min	10min	3 min	5min	10min
NAWA	1					1			
SWTH				1					
GCKI	1								
OVEN	1								
WTSP	1				1				
RCKI				1					
HETH									1
SOVI				1					
WIWR									1
NOFL						1			

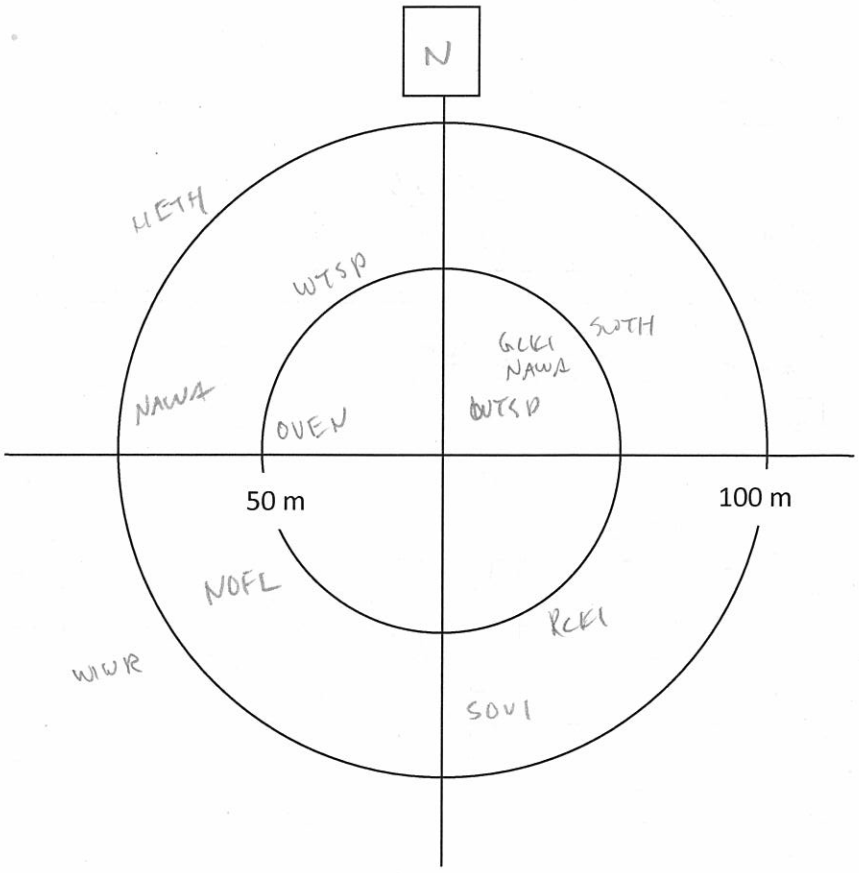

Notes/Incidental observations: RESQ

Project Number: TC121522
Survey Date: May 31, 2013

AMEC Earth & Environmental
160 Traders Blvd East, Mississauga, ON L4Z 3K7
Tel: (905) 568-2929
Cell: (416) 459-6228
Fax: (905) 568-1686

Point Count Name: BB134
UTM: 040 466770, 5282397
Start Time 06:04
Habitat: Aspen w m. maple understory - scattered balsam

Species	<50m			<100m			>100m		
	3min	5min	10min	3min	5min	10min	3 min	5min	10min
MAWA	11								
OVEN									
BTBW	1			1					
WIWR	1			1					
AMRE	1								
BHVI					1				
SWTH		1			1				
NAWA						1			
WTSP						1			
RUGR						1			

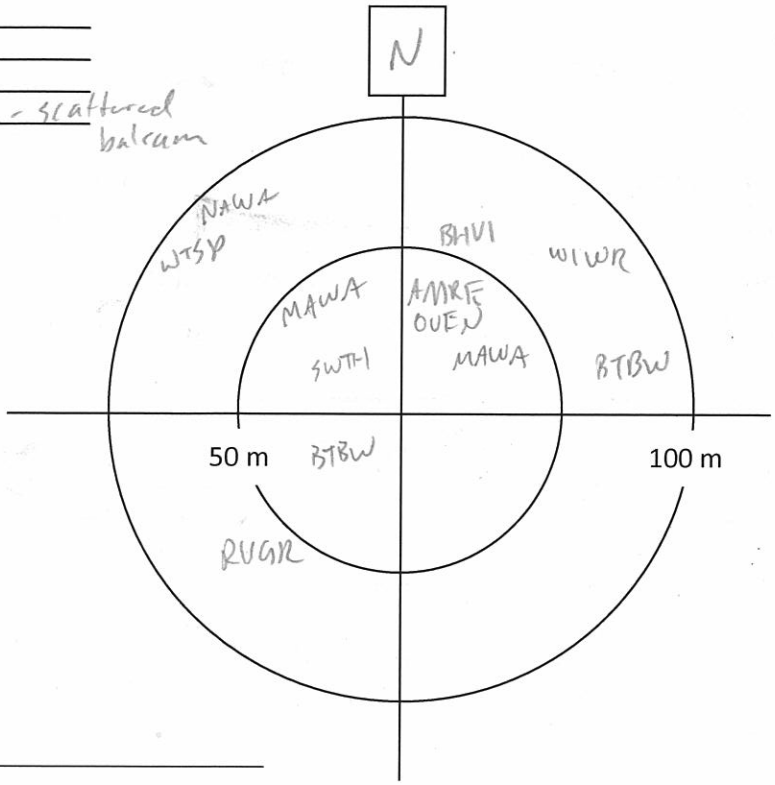

Notes/Incidental observations:

Point Count Name: BB133
UTM: 041 466816, 5282709
Start Time 06:23
Habitat: Sb w Ce - Bw - Bf under - sphagnum

Species	<50m			<100m			>100m		
	3min	5min	10min	3min	5min	10min	3 min	5min	10min
NAWA				11					
WTSP				11					
MAWA				1					
BLBW	1								
RCKI	1								
BHV				1					
YBFL				1					
OCKI			1						

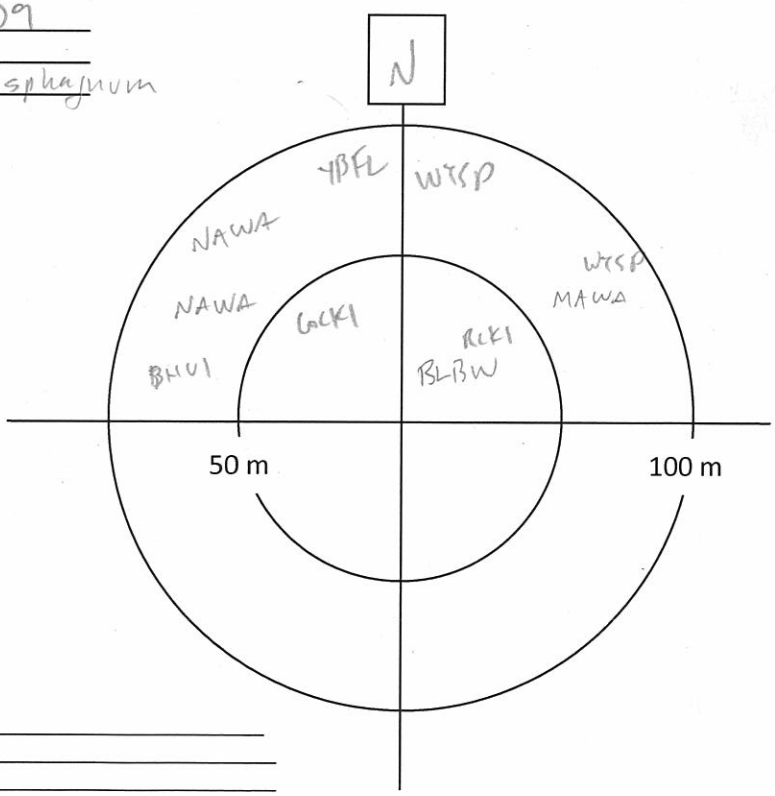

Notes/Incidental observations: RESQ

Project Number: TC121522
Survey Date: May 31, 2013

AMEC Earth & Environmental
160 Traders Blvd East, Mississauga, ON L4Z 3K7
Tel: (905) 568-2929
Cell: (416) 459-6228
Fax: (905) 568-1686

Point Count Name: BB132
UTM: 04U 467058, 5282955
Start Time 06:44
Habitat:

Species	<50m			<100m			>100m		
	3min	5min	10min	3min	5min	10min	3 min	5min	10min
NAWA		1		11					
RCKI				1					
YBFL	1								
WTSP	1			1					
MAWA	1								
OVEN					1				
YRWA						1			
PAWA						1			
SWTH									
SWTH		1							

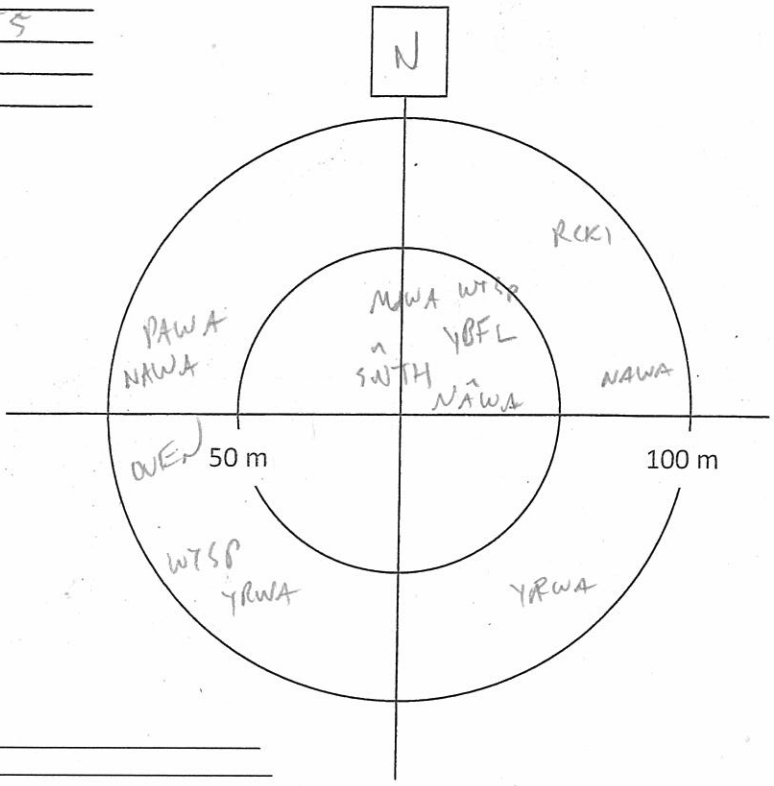

Notes/Incidental observations:

Point Count Name: BB131
UTM: 07:08
Start Time 04B - 467330, 5282881
Habitat: Birch, maple understory

Species	<50m			<100m			>100m		
	3min	5min	10min	3min	5min	10min	3 min	5min	10min
NOWA				1					
YBSA				1					
WTSP				1				1	11
NAWA	1				1				
BHVI	1						1		
GCKI	1								
OVEN				1					
RUGR				1					
COYE								1	
CEDW									
BLBW			1						

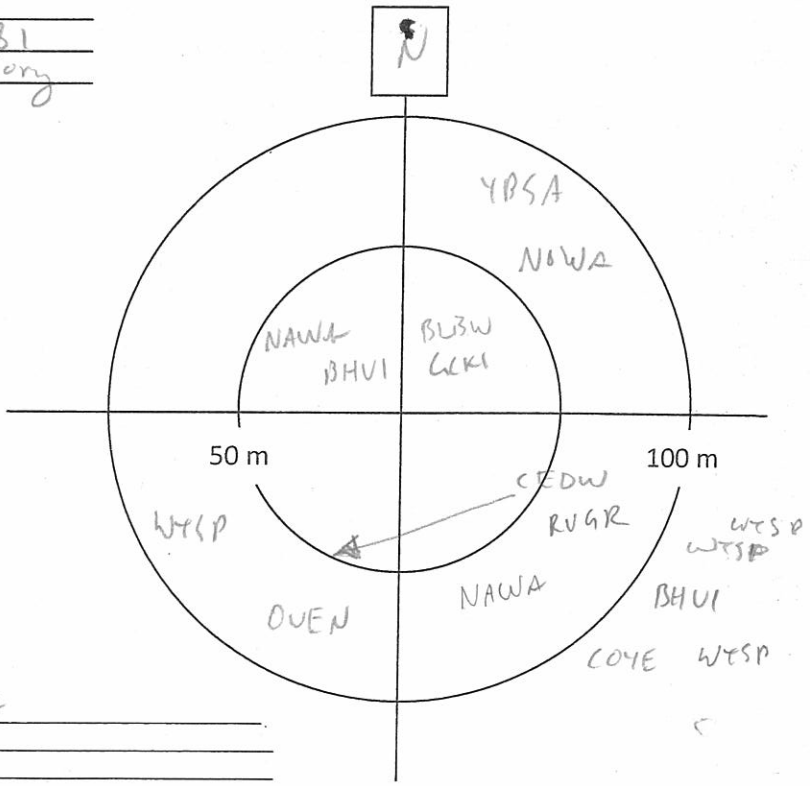

Notes/Incidental observations: en route - PAWA

Project Number: TC121522
Survey Date: May 31, 2013

AMEC Earth & Environmental
160 Traders Blvd East, Mississauga, ON L4Z 3K7
Tel: (905) 568-2929
Cell: (416) 459-6228
Fax: (905) 568-1686

Point Count Name: BB129
UTM: 050
Start Time 08:07
Habitat: alder shrub + cedar

Species	<50m			<100m			>100m		
	3min	5min	10min	3min	5min	10min	3 min	5min	10min
SWA				11					
RCKI	1								
NOWA	1								
RUGR				1					
YBFL	1								
WIWR				1					
NAWA				1					
PIWO							1		
WTSP								1	
COLO									1

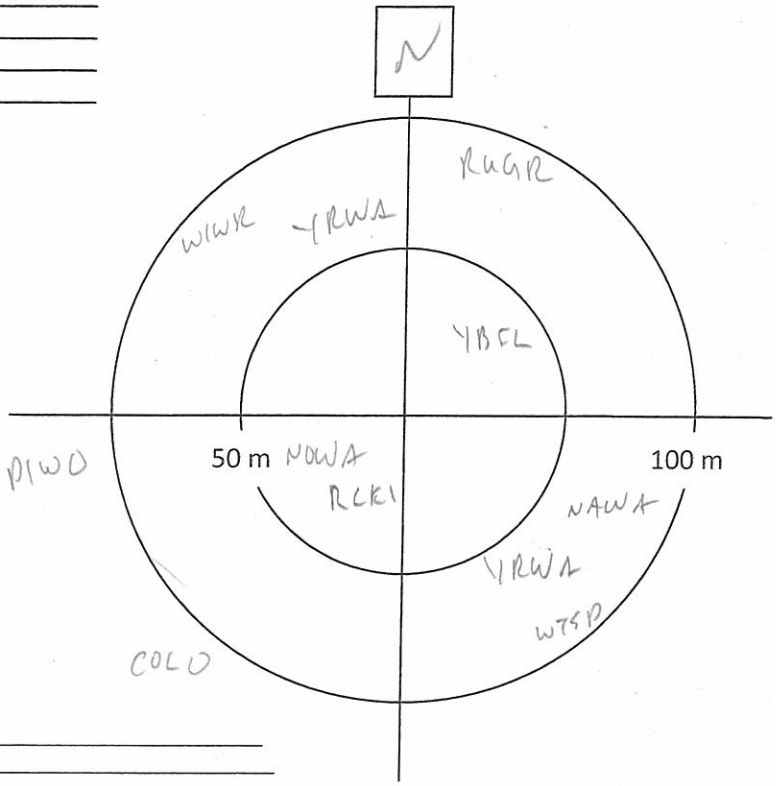

Notes/Incidental observations:

Point Count Name: BB130
UTM: 049
Start Time 07:33
Habitat: Alder, Dogwood, spruce

Species	<50m			<100m			>100m		
	3min	5min	10min	3min	5min	10min	3 min	5min	10min
NOWA				1					
WTSP	11								
NAWA	1								
RUGR	1								
RCKI	1			1					
NAWA		•			1				
YBFL				1					
CAHO									
GCKI						1			
TEWA				11					

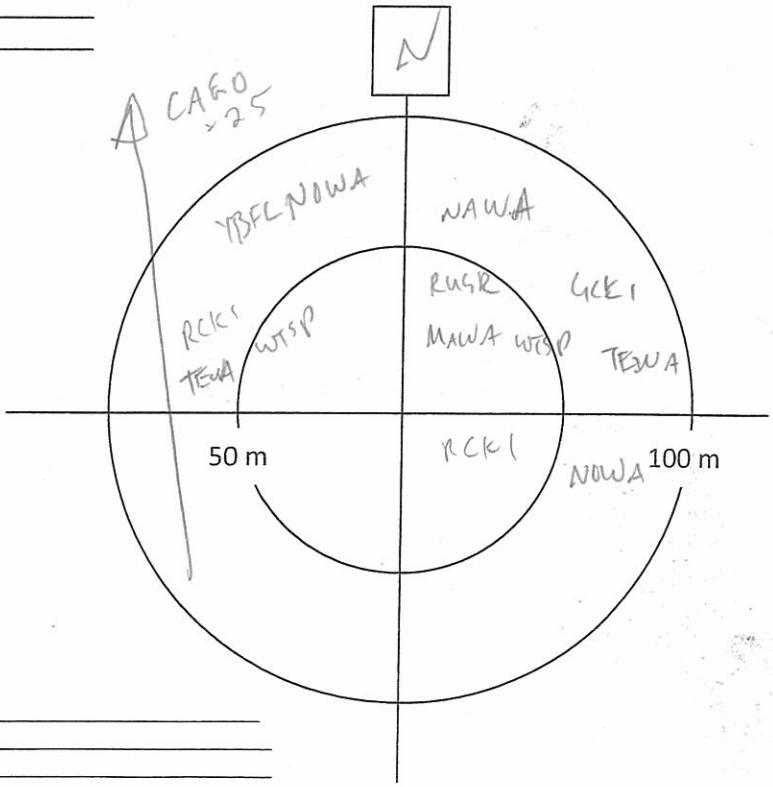

Notes/Incidental observations:

wpt 051 - old small raptor nest in cedars → LEOW?

Project Number: TC121522
Survey Date: May 31, 2013

AMEC Earth & Environmental
160 Traders Blvd East, Mississauga, ON L4Z 3K7
Tel: (905) 568-2929
Cell: (416) 459-6228
Fax: (905) 568-1686

Point Count Name: BB128
UTM: 052
Start Time 08:30
Habitat: Black spruce, sphagnum, spot ab. Labrador tea moist.

Species	<50m			<100m			>100m		
	3min	5min	10min	3min	5min	10min	3 min	5min	10min
RBNU	1								
RCKI	1								
TEWA	1							1	
AMCR				1					
WTSP				1	1			1	
YRWA				1					
HETH					1				
YBFL					1				
MAWA						1			1
OVEN									1

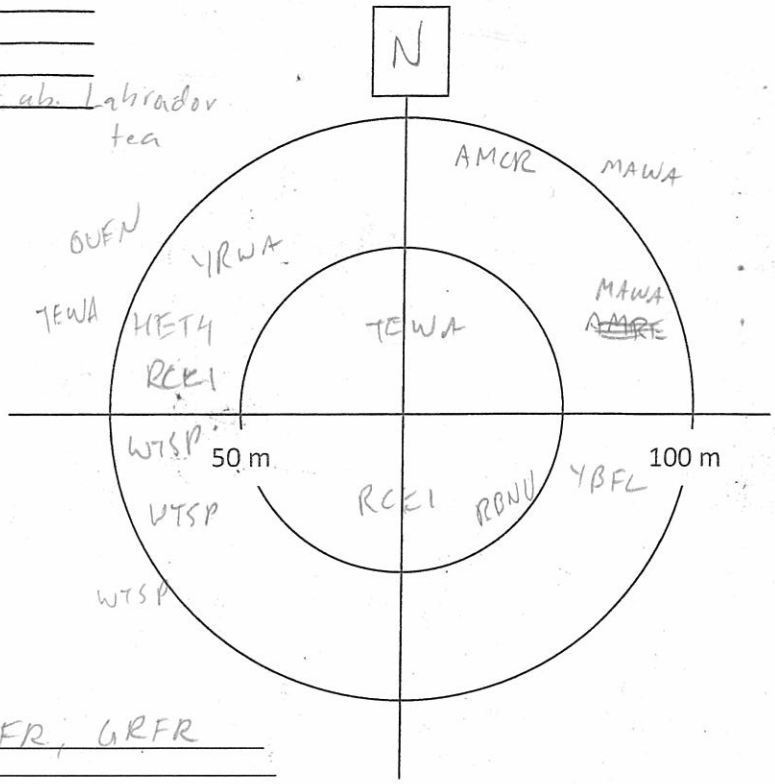

Notes/Incidental observations: en route WOFR, GRFR

Point Count Name: BB129
UTM: 053
Start Time 08:55
Habitat: ½ Aspen, ½ Pj

Species	<50m			<100m			>100m		
	3min	5min	10min	3min	5min	10min	3 min	5min	10min
REVI	1								
MAWA	1			1					
GCKI									
YBFL				1					
GCKI				1					
OVEN							1		
WTSP						1			
RBNU						1			

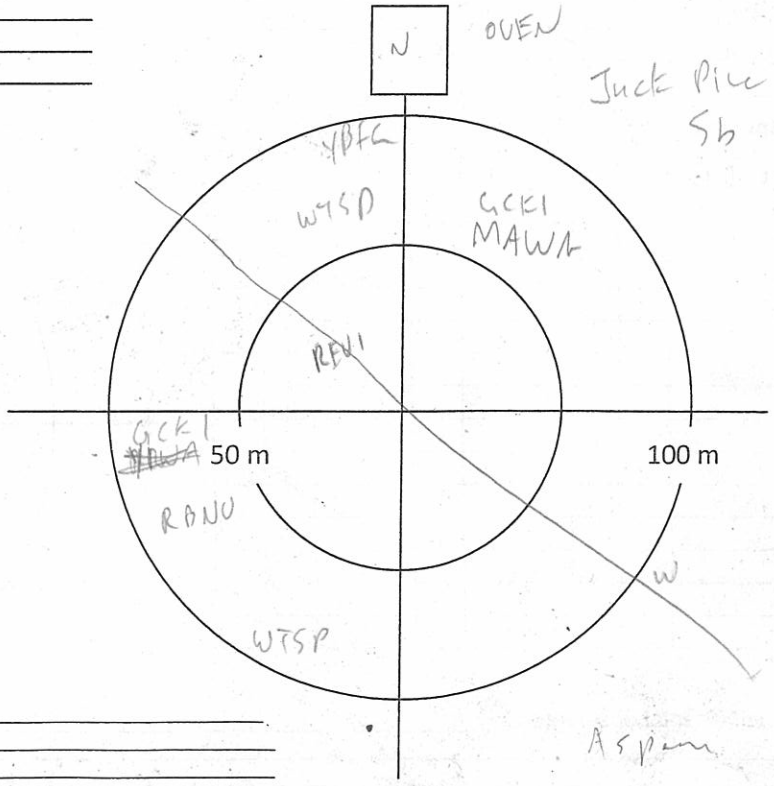

Jack Pine + Sb

Notes/Incidental observations:

Project Number: TC121522
Survey Date: May 31, 2013

AMEC Earth & Environmental
160 Traders Blvd East, Mississauga, ON L4Z 3K7
Tel: (905) 568-2929
Cell: (416) 459-6228
Fax: (905) 568-1686

Point Count Name: BB126
UTM: 054 467163, 5283237
Start Time ~~[illegible]~~ 09:16
Habitat: Jack Pine, upland - ~~sphagnum~~ Feathermoss

Species	<50m			<100m			>100m		
	3min	5min	10min	3min	5min	10min	3 min	5min	10min
BTBW				1					
OVEN	1								
RCKI				1					
MAWA				1					
WTSP					1	1			

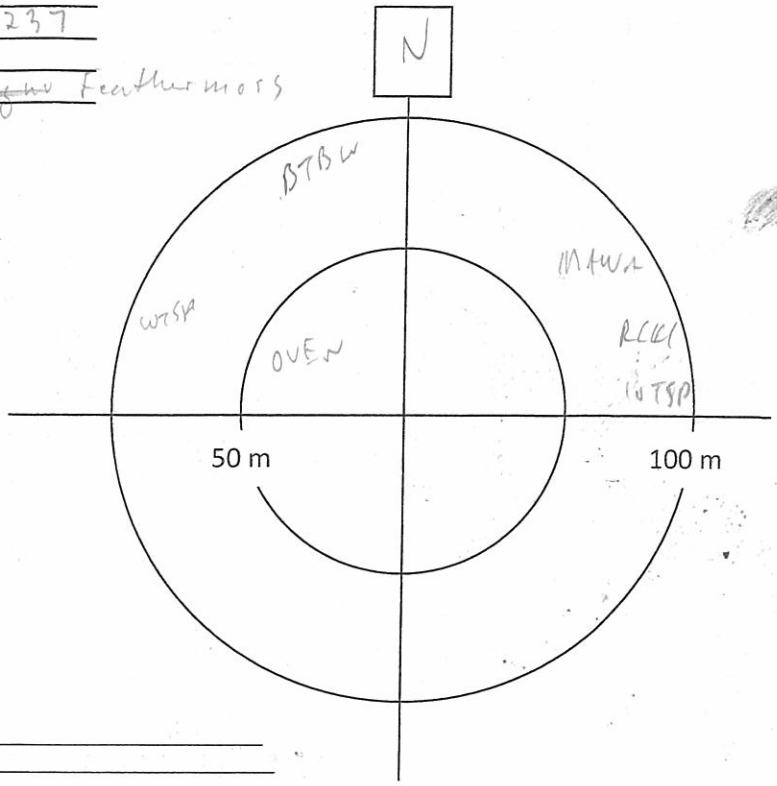

Notes/Incidental observations:

Point Count Name: BB125
UTM: 042
Start Time 09:37
Habitat: Jack Pine

Species	<50m			<100m			>100m		
	3min	5min	10min	3min	5min	10min	3 min	5min	10min
OVEN				1					
HETH									1

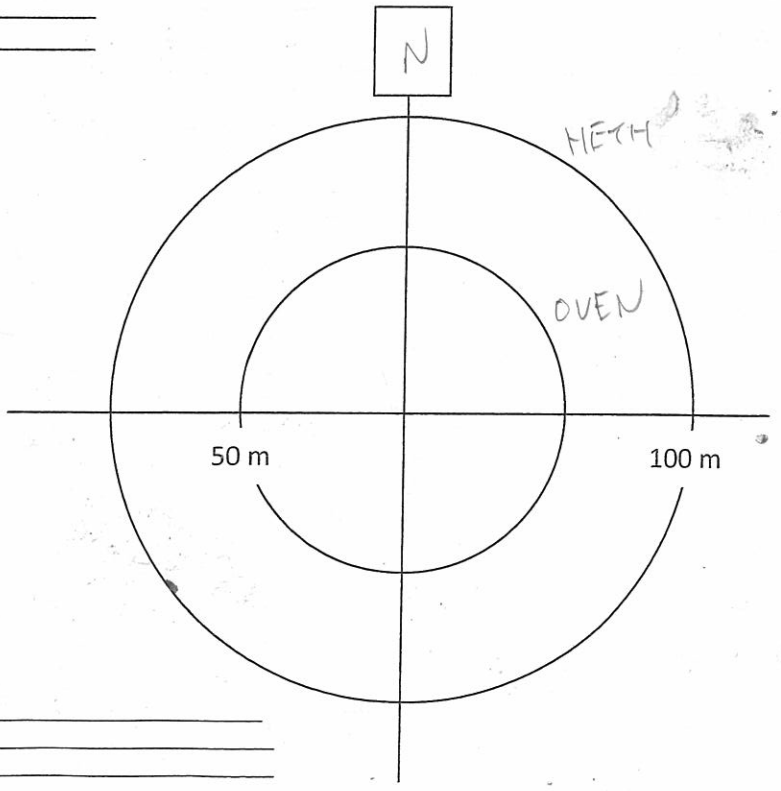

Notes/Incidental observations:

AMEC Earth & Environmental
160 Traders Blvd East, Mississauga, ON L4Z 3K7
Tel: (905) 568-2929
Cell: (416) 459-6228
Fax: (905) 568-1686

Breeding Bird Point Count Survey

Project Name: IMG		**Project Number:** TC121522	
Crew Leader: [illegible]	**Observers:**		
Date: MAY 31/2013	**Start Time (24hr):** 5:26 am	**End Time (24hr):** 10:45 am	
Weather: SOME CLOUDS, GOOD	**Temperature:**	**Wind:** 1-2	**Precipitation (Circle):** (0) None 1 Haze/Fog 2 Drizzle 3 Rain

Point Count Name: B145
UTM:
Start Time 5:26 - 5:36 am
Habitat: EDGE OF TREED BOG (10-25% TREES) + MIXED (BLACK SPRUCE L. TEA, SPHAG. CLEARCUT

Species	<50m			<100m			>100m		
	3min	5min	10min	3min	5min	10min	3 min	5min	10min
WTSP	1			1111			11		
YRWA		1							
AMRO	1								
COYE				1					
PAWA					1				
MAWA				1			11		
HETH				1					
BLPW						1			
COYE				11					
DEJU				1					
PUFI						1			
YBSA							1		
COLO							1	1	

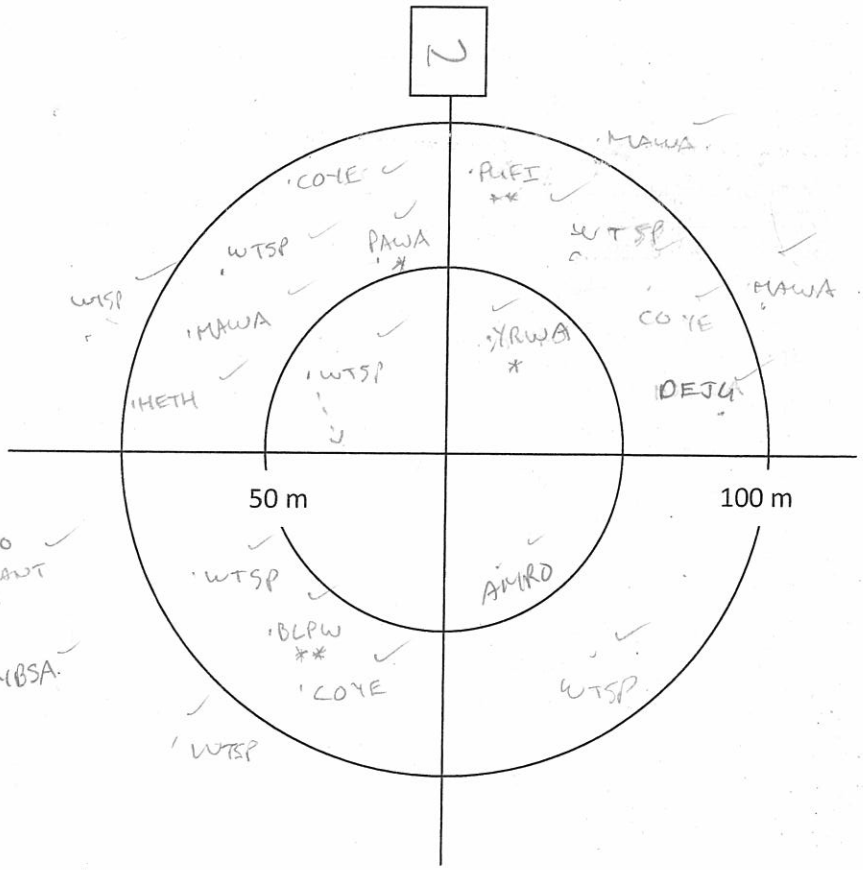

COLO DISTANT
YBSA

Notes/Incidental observations: LOTS OF MOSQUITOS

Project Number: IMG
Survey Date: MAY 31, 2013

AMEC Earth & Environmental
160 Traders Blvd East, Mississauga, ON L4Z 3K7
Tel: (905) 568-2929
Cell: (416) 459-6228
Fax: (905) 568-1686

Point Count Name: B148
UTM:
Start Time 5:46 am - 5:56 am
Habitat: At 100 - 30M Bf REGEN - MATURE FOREST BEAKED HAZEL ABUNDANT

Species	<50m			<100m			>100m		
	3min	5min	10min	3min	5min	10min	3 min	5min	10min
BLBW			1						
OVEN		1		11					1
MAWA				1					
RUGR				1					
NOPA				1					
REVI				1					
RBNU						1			
SWTH				1					
NAWA				1					
WTSP							11		

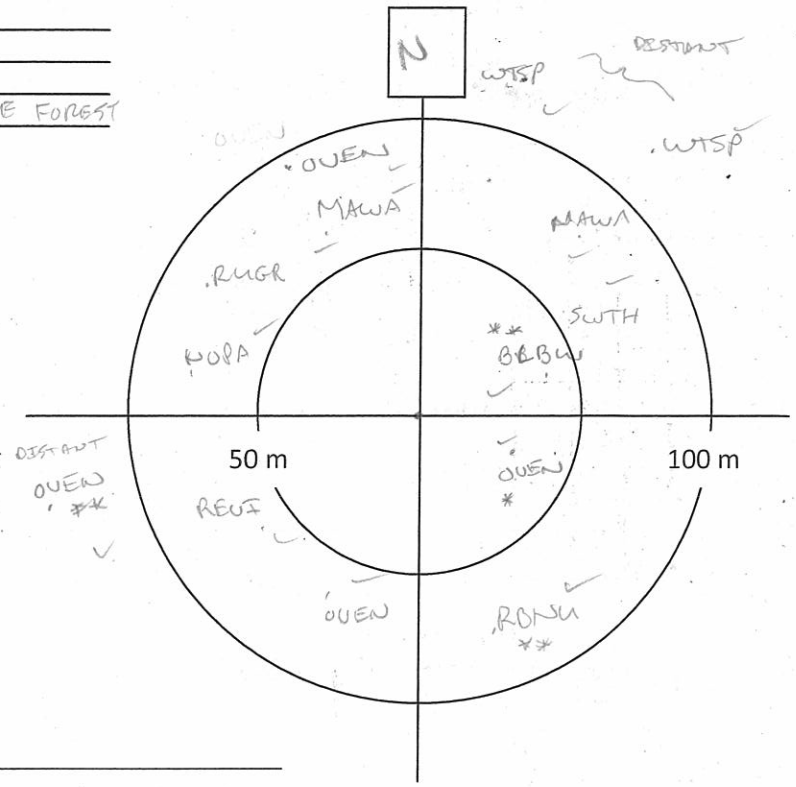

Notes/Incidental observations:

Point Count Name: B144
UTM:
Start Time 6:10 am - 6:20 am
Habitat: EDGE OF Pj STAND (MOIST BUT NOT WETLAND) AND MIXED Bf30 Sw30 Pj10 Bw20

Species	<50m			<100m			>100m		
	3min	5min	10min	3min	5min	10min	3 min	5min	10min
BRCR	1								
GCKI	1								
SWTH	1					1			
OVEN	1				1				
WTSP				1					
RCKI				1					
BTBW						1			
MAWA				111					
RBNU						1			
YBSA					1				
NAWA				1	1				
WIWR									1

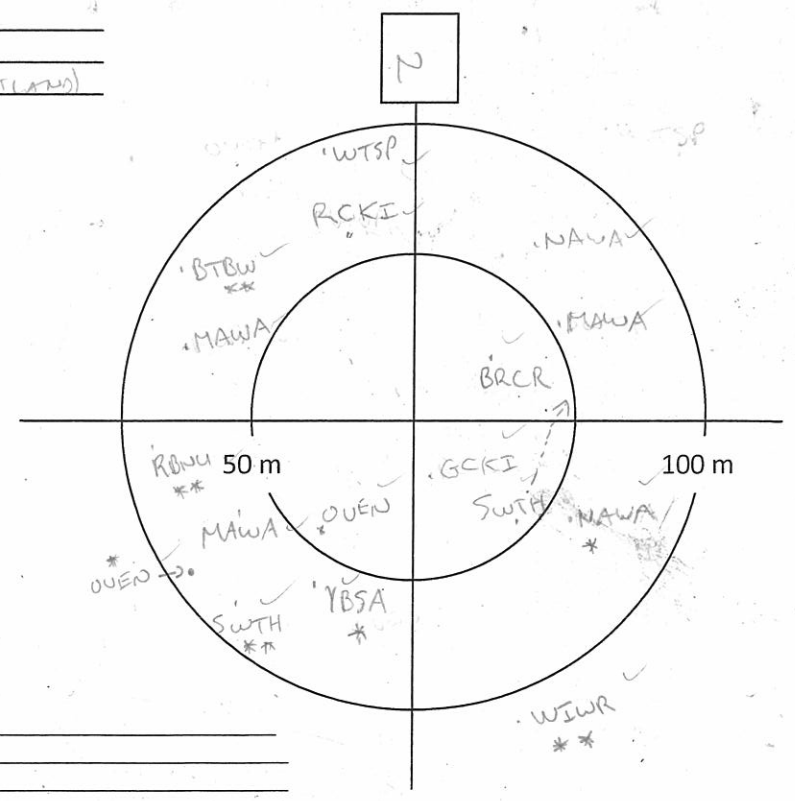

Notes/Incidental observations:

Project Number: IMG
Survey Date: MAY 31/2013

AMEC Earth & Environmental
160 Traders Blvd East, Mississauga, ON L4Z 3K7
Tel: (905) 568-2929
Cell: (416) 459-6228
Fax: (905) 568-1686

Point Count Name: B147
UTM: _____
Start Time 6:31 - 6:41
Habitat: At DOMINATED BEAKED HAZEL MIXED. GROUND PINE, MAIANA

Species	<50m			<100m			>100m		
	3min	5min	10min	3min	5min	10min	3 min	5min	10min
REVI	1			1					
NAWA			1						
YRWA				II					
BTBW					1				
RUGR				1	1				
MAWA				1					
NOPA				1					
OVEN				1					
HETH				1					

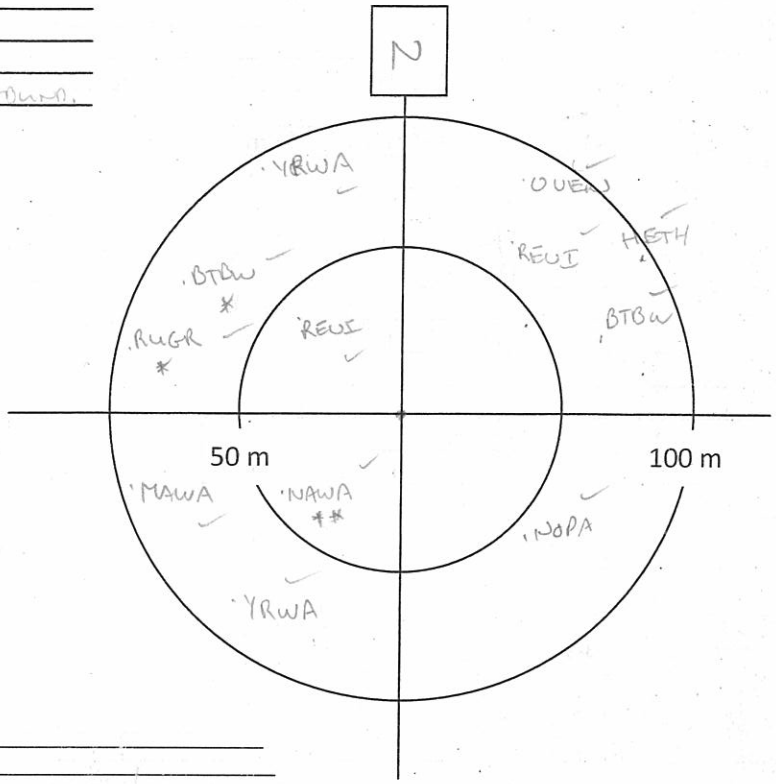

Notes/Incidental observations: _____

Point Count Name: B151
UTM: _____
Start Time 6:54 - 7:04
Habitat: At BW DOMINATED <10% BF Hm Hb, Am NEAR SHRUB DOM. WETLAND (LANLINCA, LEATHERLEAF) SOME GRASSES OPEN WATER PRESENT NO SPHAGNUM

Species	<50m			<100m			>100m		
	3min	5min	10min	3min	5min	10min	3 min	5min	10min
REVI	1			1					
VEER				1	1				
RBNU						1			
WIWR					1				
OVEN				III					
NOPA					1	1			
RUGR				1					
BLJA						1			
BTBW				1					

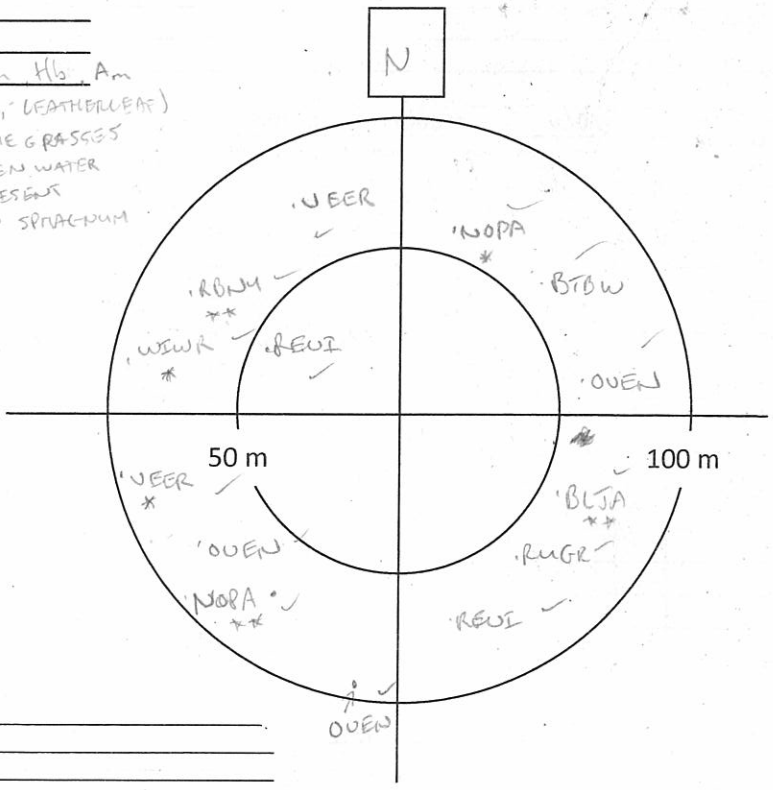

Notes/Incidental observations: _____

Project Number: IMG
Survey Date: MAY 31/2013

AMEC Earth & Environmental
160 Traders Blvd East, Mississauga, ON L4Z 3K7
Tel: (905) 568-2929
Cell: (416) 459-6228
Fax: (905) 568-1686

Point Count Name: B153
UTM: _____
Start Time 7:15 - 7:25 am
Habitat: MIXED P 70 Bw 30 - BEAKED HAZEL ABUNDANT
SPARSE GROUND VEG (SEE PHOTO)

Species	<50m			<100m			>100m		
	3min	5min	10min	3min	5min	10min	3 min	5min	10min
BCCH			1						
BLBW	1			1					
WTSP				1	1				
HETH				1					1
OVEN				11		1			
NAWA				1					

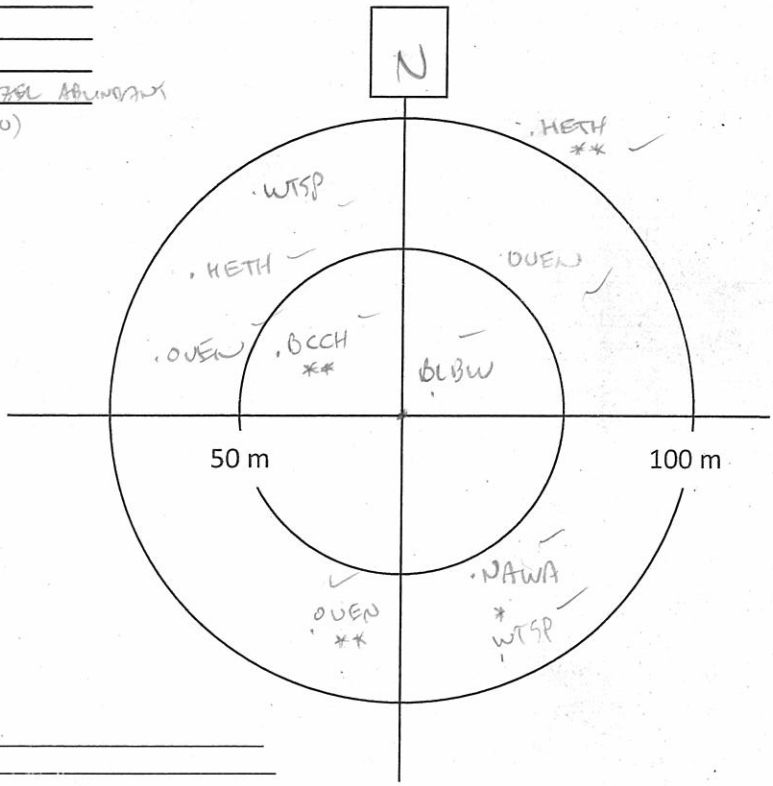

Notes/Incidental observations: _____

Point Count Name: B150
UTM: _____
Start Time 7:35 - 7:45
Habitat: MIXED - At 30 Bw 30 Sw 20 Bf 10 Ms 5 Pw 5
BEAKED HAZEL ABUNDANT

Species	<50m			<100m			>100m		
	3min	5min	10min	3min	5min	10min	3 min	5min	10min
BTBW	1								
OVEN	1			1	1				
HETH				11					
BLBW						1			
MAWA					1				
RUGR				1					
BTBW						1			
NAWA					1				
SWTH				1					

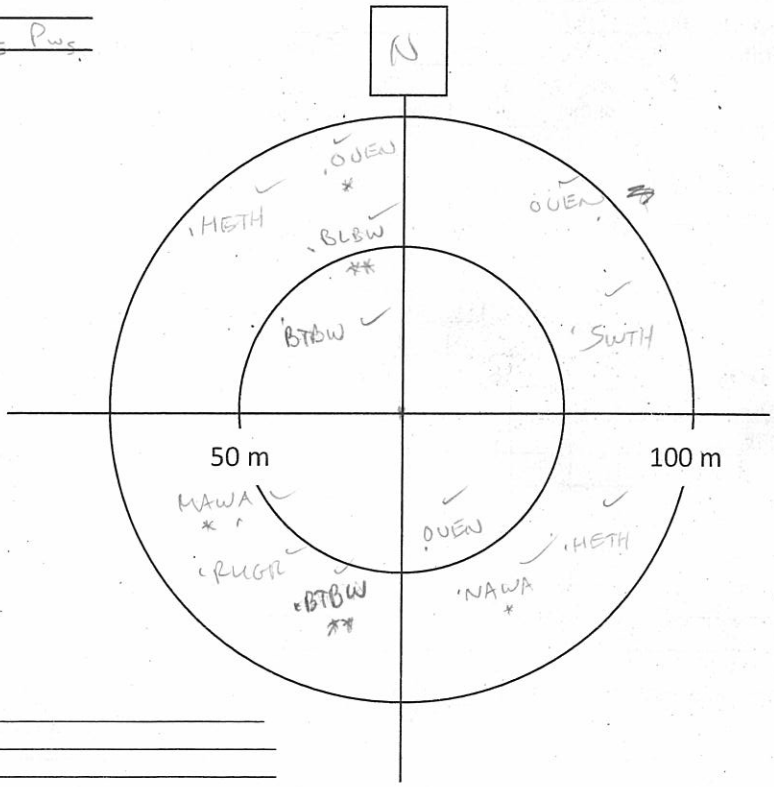

Notes/Incidental observations: _____

Project Number: IMG
Survey Date: MAY 31/2013

AMEC Earth & Environmental
160 Traders Blvd East, Mississauga, ON L4Z 3K7
Tel: (905) 568-2929
Cell: (416) 459-6228
Fax: (905) 568-1686

Point Count Name: B152
UTM:
Start Time 7:54 - 8:04
Habitat: P: 80% Bw 20%

Species	<50m			<100m			>100m		
	3min	5min	10min	3min	5min	10min	3 min	5min	10min
YRWA	1								
MAWA			1						
YBSA				1					
YRWA					1				
OVEN				11			1		
NAWA				1					
HETH				1					

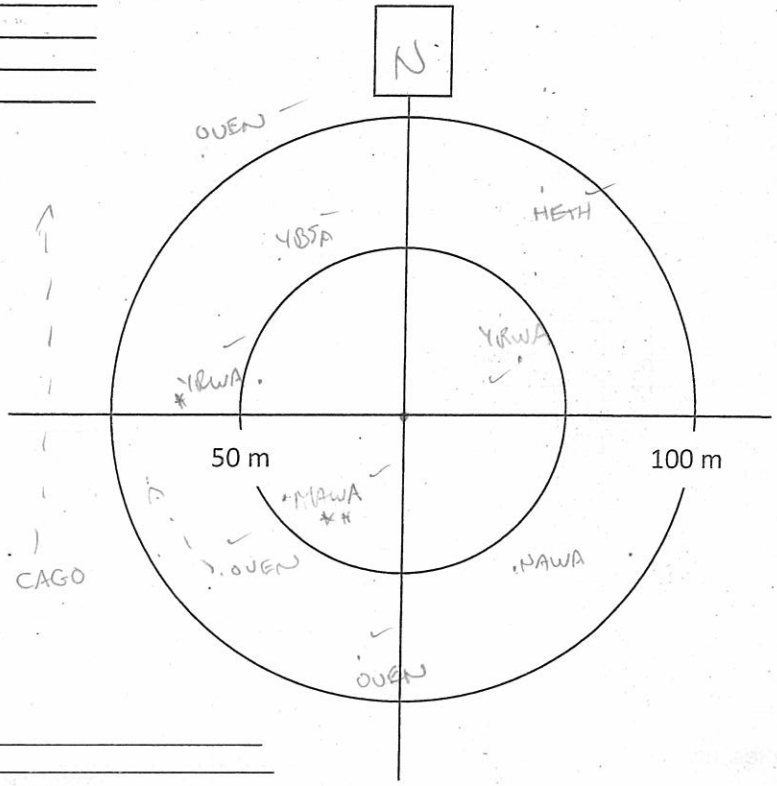

Notes/Incidental observations:

Point Count Name: B149
UTM:
Start Time 8:13 - 8:23
Habitat: P: 90% Sc to 5% Bw VERY RARE +Pw +Sw

Species	<50m			<100m			>100m		
	3min	5min	10min	3min	5min	10min	3 min	5min	10min
WTSP	1								
NAWA	1			1					
YRWA	11			1					
OVEN	1						1		
RCKI				1					
BBWA						1			
HETH				1					

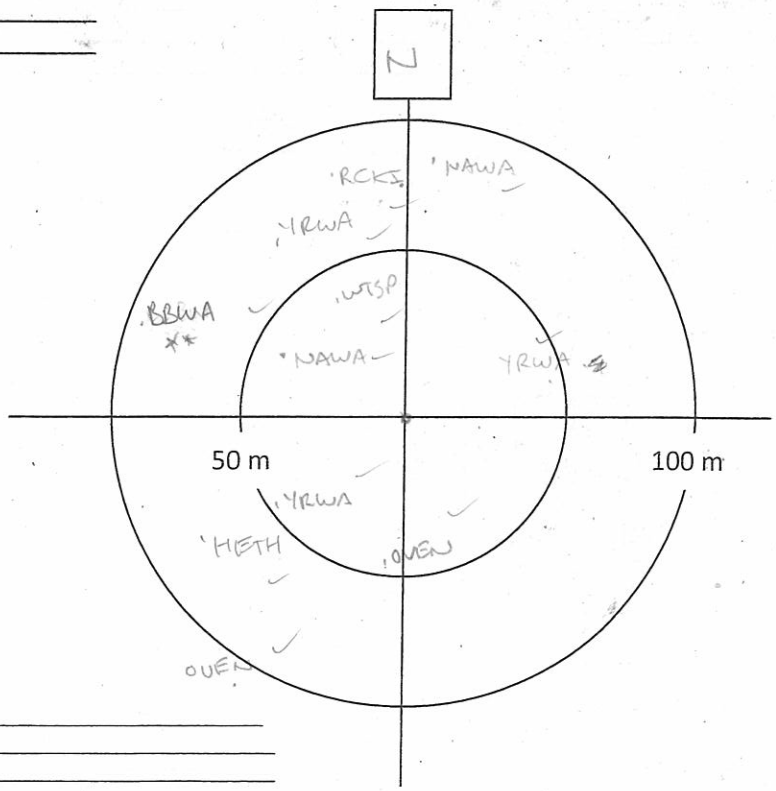

Notes/Incidental observations:

Project Number: IMG
Survey Date: MAY 31/2013

AMEC Earth & Environmental
160 Traders Blvd East, Mississauga, ON L4Z 3K7
Tel: (905) 568-2929
Cell: (416) 459-6228
Fax: (905) 568-1686

Point Count Name: BM6
UTM:
Start Time 8:32 - 8:42
Habitat: SAME AS BM9

Species	<50m			<100m			>100m		
	3min	5min	10min	3min	5min	10min	3 min	5min	10min
NAWA	1				1				
RCKI	1								
REVI					1				
WIWR				1		1			
OVEN					1				
DOWO				1					
YRWA						1			
HETH						1			

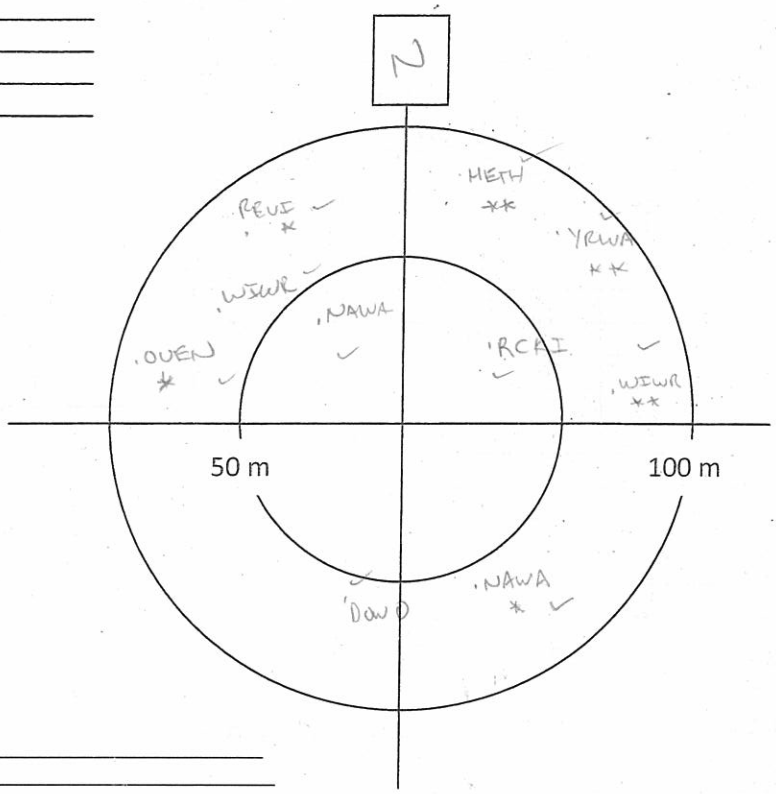

Notes/Incidental observations:

Point Count Name: BM3
UTM:
Start Time 8:56 - 9:06
Habitat: TRANSITION - P: 90% BW10% / AT BW 60% SW BT40%

Species	<50m			<100m			>100m		
	3min	5min	10min	3min	5min	10min	3 min	5min	10min
OVEN	III			II	I				
RCKI				1	1				
REVI				1					
RBNU						1			
YRWA					II				
NAWA	1					1			
RUGR				1					
BLJA									1

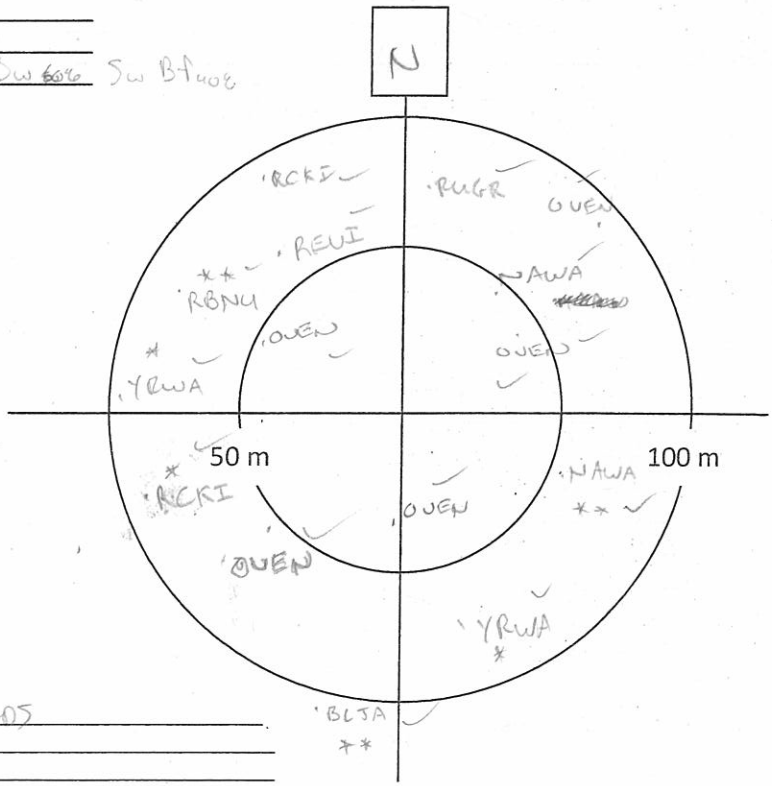

Notes/Incidental observations: LOTS OF OVENBIRDS

Project Number: EMG
Survey Date: MAY 31/2013

AMEC Earth & Environmental
160 Traders Blvd East, Mississauga, ON L4Z 3K7
Tel: (905) 568-2929
Cell: (416) 459-6228
Fax: (905) 568-1686

Point Count Name: B139
UTM:
Start Time 9:16 - 9:26
Habitat: At Bw 80% SWBF 20%
LOTS OF BALSAM FIR REGENERATION

Species	<50m			<100m			>100m		
	3min	5min	10min	3min	5min	10min	3 min	5min	10min
BCCH		1							
REVI	1			1					
NAWA	1								
BHVI	1								
RBNU						1			
MAWA				1					
OVEN							1		

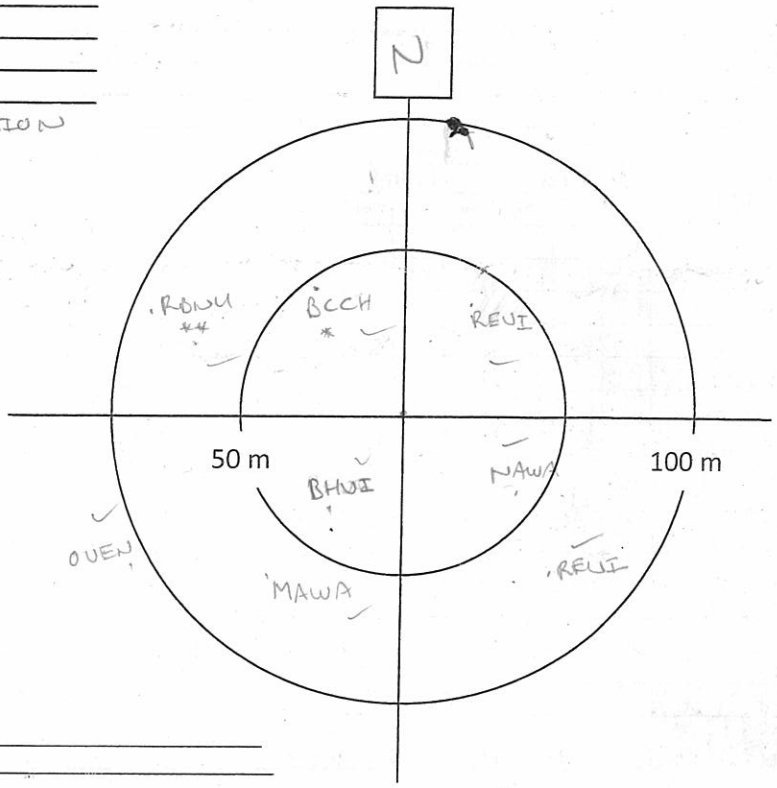

Notes/Incidental observations:

Point Count Name: B140
UTM:
Start Time 9:38 - 9:48
Habitat: TRANSITION - MIXED At Bw 50% Sw BF 50%
ALSO A6 SWAMP (LINEAR) BEAKED HAZEL ABUNDANT

Species	<50m			<100m			>100m		
	3min	5min	10min	3min	5min'	10min	3 min	5min	10min
OVEN	1			1		1			
WIWR	1								
REVI	11								
NAWA				1	1				
NOPA						1			
BTNW				1			1		
RUGR					1				
BTBW					1				
BWHA				1					

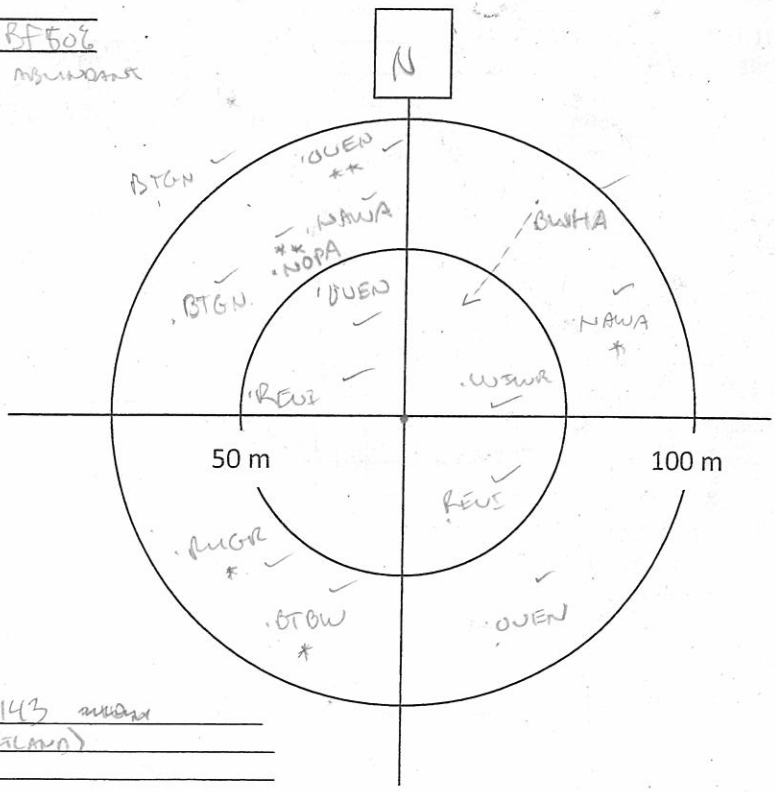

Notes/Incidental observations: SPRINGS FROM GPS 143 AREA
- FEED A6 SWAMP (LINEAR WETLAND)
~10M STREAM TO WETLAND
NOT SPRING INFLOW FOUND

Project Number: IMG
Survey Date: MAY 31/2013

AMEC Earth & Environmental
160 Traders Blvd East, Mississauga, ON L4Z 3K7
Tel: (905) 568-2929
Cell: (416) 459-6228
Fax: (905) 568-1686

Point Count Name: B141
UTM:
Start Time 10:01 - 10:11
Habitat: At Bw 80% SwBf 20%
BEAKED HAZEL ABUNDANT

Species	<50m			<100m			>100m		
	3min	5min	10min	3min	5min	10min	3 min	5min	10min
LEFL	III								
OVEN			I	II					
BTBW	I								
HETH		I							
REVI	I			II					
BTBW				I					
RUGR						I			
WIWR				I					
DOWO						I			
PUFI					I				
AMRO				I					
BWHA									I

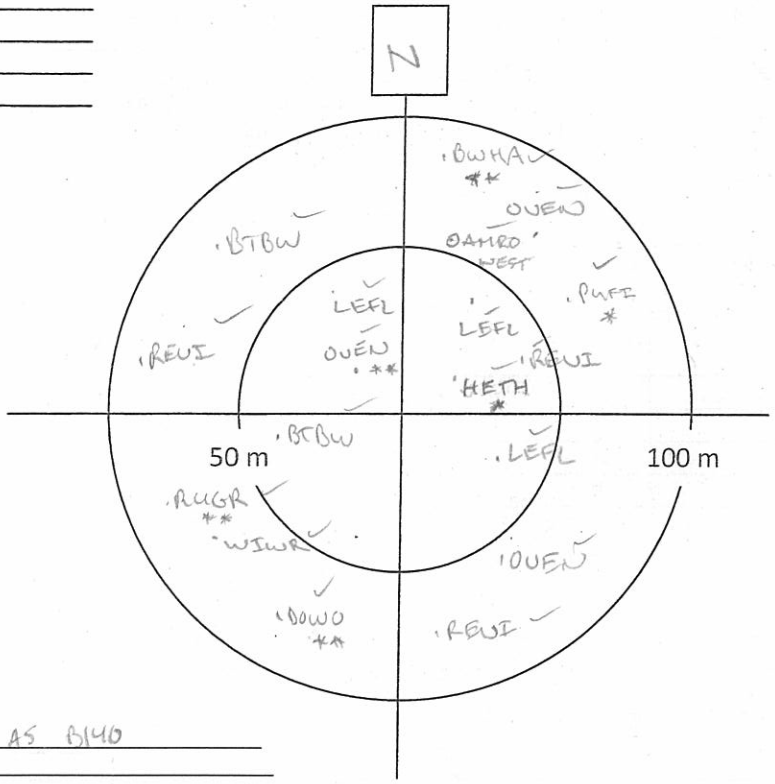

Notes/Incidental observations: BWHA POSS. SAME AS B140

Point Count Name: B142
UTM:
Start Time 10:22 - 10:32
Habitat: CLEARCUT · DECID. REGEN.
DECID. + CONIF. FOREST WITHIN RANGE

Species	<50m			<100m			>100m		
	3min	5min	10min	3min	5min	10min	3 min	5min	10min
WTSP	I			IIII					
COYE	I								
CSWA	II								
NAWA			I						
DEJU				I					
MOWA					I				
MAWA						I			
YRWA				I					
NOFL									I
HETH							I		
BTBW							I		
OVEN							I		

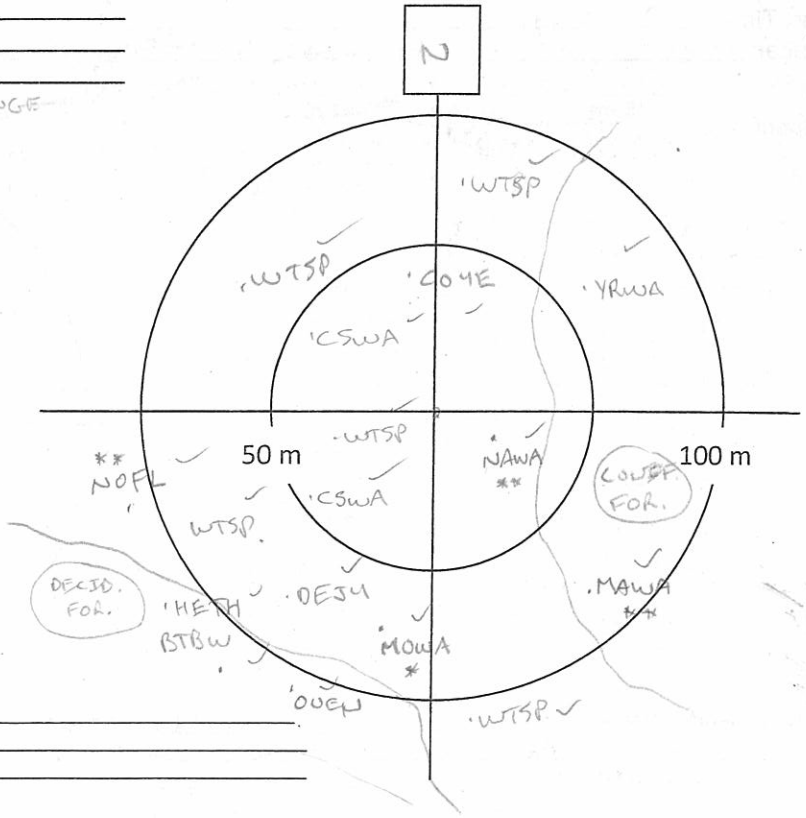

Notes/Incidental observations:

AMEC Earth & Environmental
160 Traders Blvd East, Mississauga, ON L4Z 3K7
Tel: (905) 568-2929
Cell: (416) 459-6228
Fax: (905) 568-1686

Breeding Bird Point Count Survey

Project Name: IAMGOLD		Project Number: TC121522	
Crew Leader:	Observers: Jon Pleszier		
Date: June 1, 2013	Start Time (24hr): 05:55	End Time (24hr): 11:15	
Weather: 30% cloud	Temperature:	Wind: 0	Precipitation (Circle): (0) None 1 Haze/Fog 2 Drizzle 3 Rain

Point Count Name: BBIO9
UTM: 17T 0461229, 5312135
Start Time 06:04
Habitat: Aspen dom. → ES3

Species	<50m			<100m			>100m		
	3min	5min	10min	3min	5min	10min	3 min	5min	10min
OVEN									
RUGR				1					
MAWA	1								
YBSA				1					
WIWR				1					
BLBW	1								
OVEN				11					
DOWO	1								
NOPA	1								
CAGO									
WTSP								1	(
BLCH					1				
HETH									1
SWTH							1		

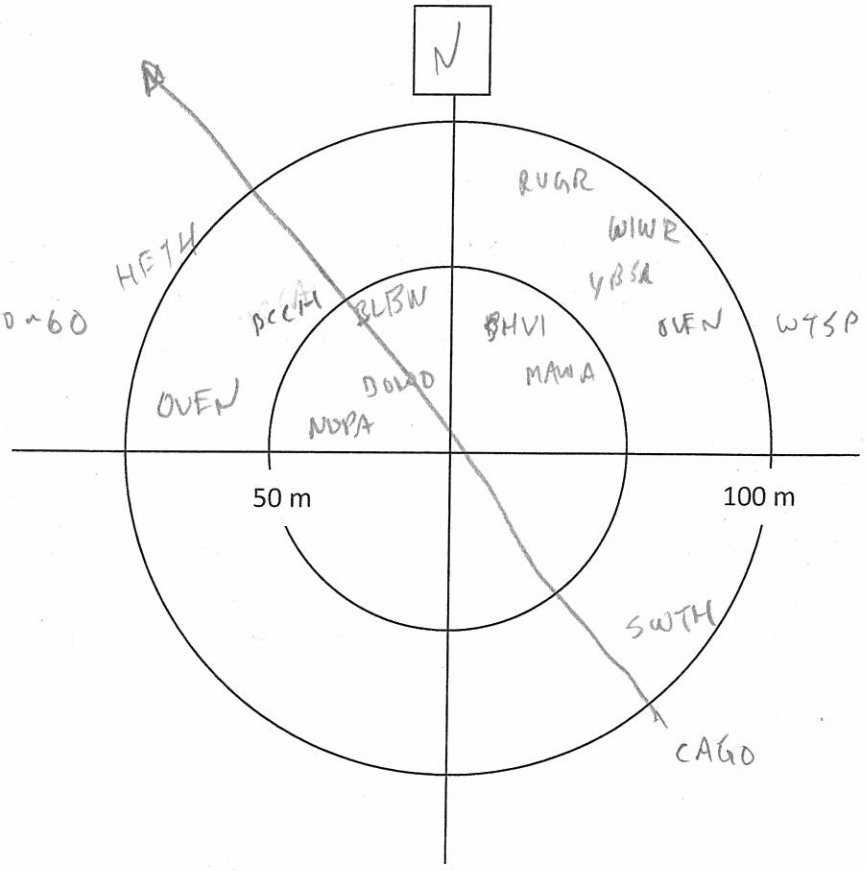

Notes/Incidental observations: RESQ
- Many snowshoe hares along access rd
- 4x4 Black bears & 1 moose along Hwy 144

Project Number: tc121522
Survey Date: June 1, 2013

AMEC Earth & Environmental
160 Traders Blvd East, Mississauga, ON L4Z 3K7
Tel: (905) 568-2929
Cell: (416) 459-6228
Fax: (905) 568-1686

Point Count Name: BB105
UTM: BB105
Start Time 06:29
Habitat: Upland spruce w Bw, some Pt, BF
ES 6f

Species	<50m			<100m			>100m		
	3min	5min	10min	3min	5min	10min	3 min	5min	10min
REVI	1			1					
BLBW				1					
OVEN									
WTSP				11					
MAWA	1								
HETH				1					
YRWA	1								

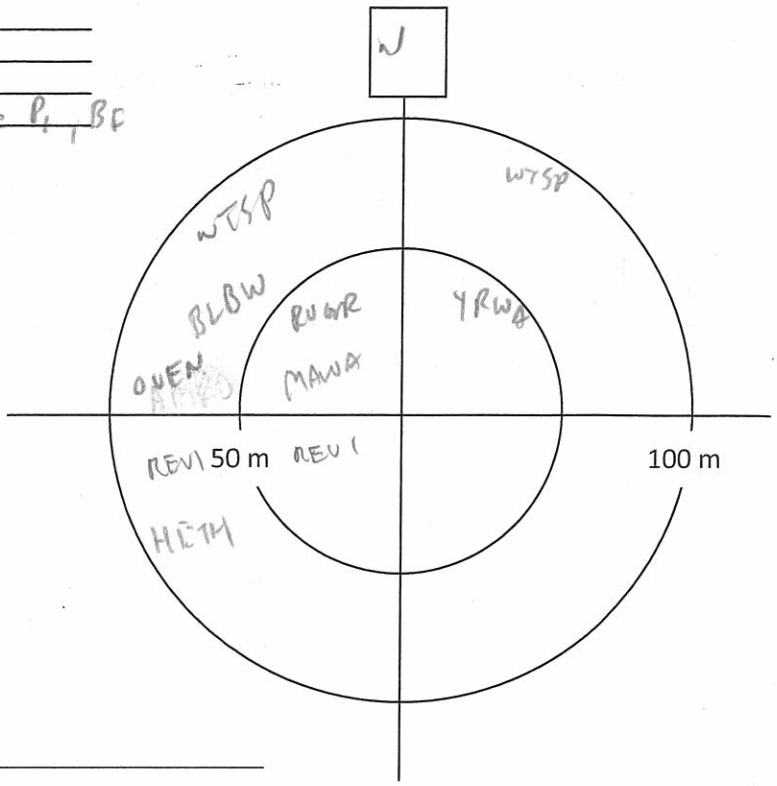

Notes/Incidental observations: RES Q x3
Moose enroute

Point Count Name: BB106
UTM:
Start Time 06:59
Habitat: ES 13r

Species	<50m			<100m			>100m		
	3min	5min	10min	3min	5min	10min	3 min	5min	10min
TEWA				1					
NOWA				1					
SWTH	1								
HETH				1					
RCKI				1					
MAWA	1								
WIWR									
WTSP			11			11			1
NAWA			1						
GCKI			1						
BHVI			1						
LEFL						1			
NAWA						1			

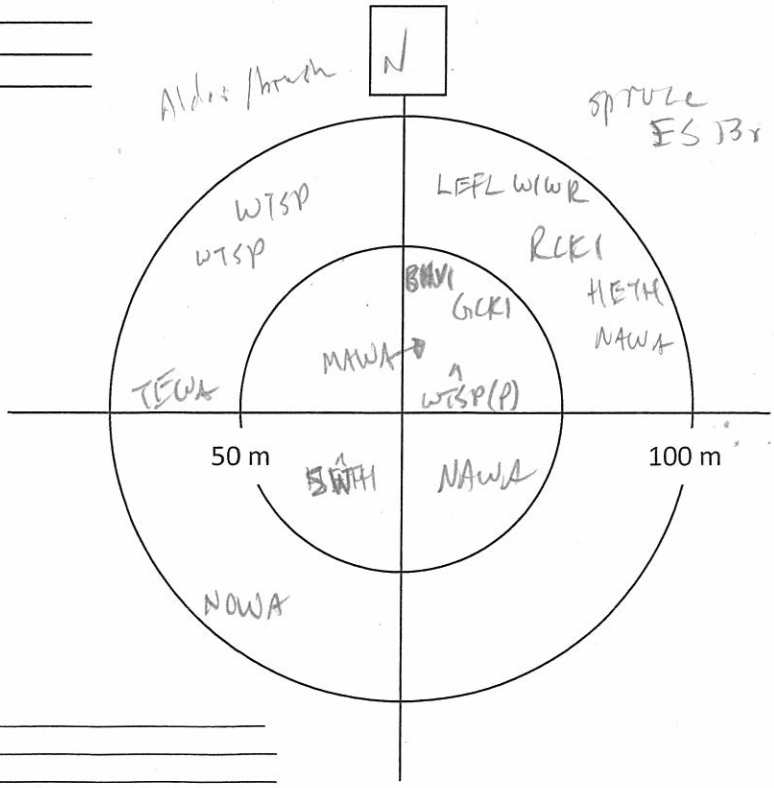

Notes/Incidental observations:

Project Number: TC121522
Survey Date: June 1, 2013

AMEC Earth & Environmental
160 Traders Blvd East, Mississauga, ON L4Z 3K7
Tel: (905) 568-2929
Cell: (416) 459-6228
Fax: (905) 568-1686

Point Count Name: BB107
UTM: Wpt-056, 17T 462273, 5312605
Start Time 07:12
Habitat: ES3 - poplar dom

Species	<50m			<100m			>100m		
	3min	5min	10min	3min	5min	10min	3 min	5min	10min
OVEN	1			1			1		
REVI	1								
BTBW				1					
BBWA									
NAWA					1				
RBNU					1				
BBWO	1								
CAGO									
YBSA		1	1						

2+

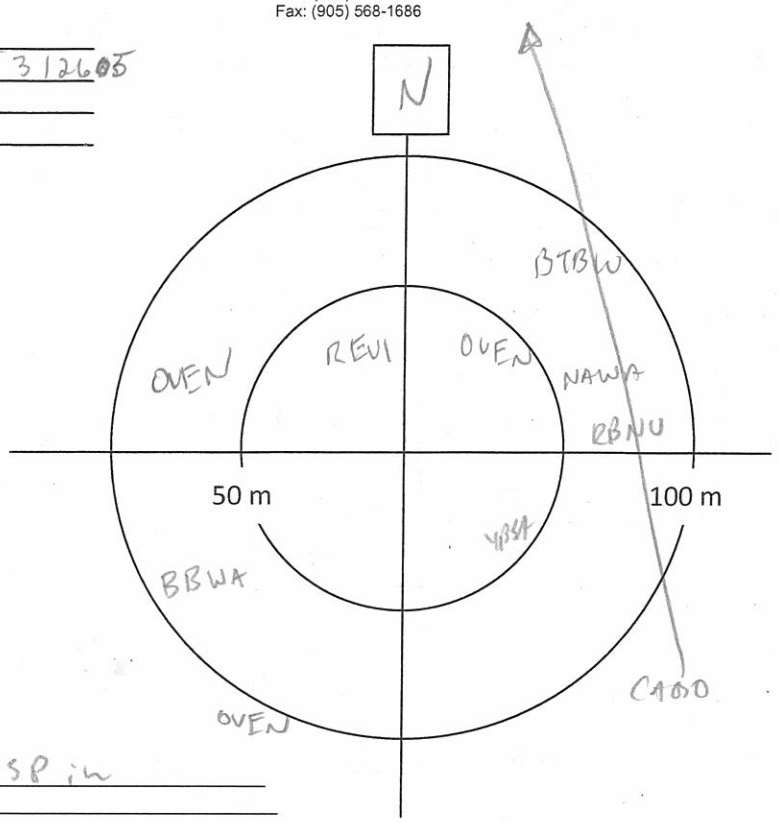

Notes/Incidental observations: en route - SWSP in RESQ

Point Count Name: BB108
UTM: 057 17T 462609, 5312689
Start Time 07:27
Habitat: Poplar Dom

Species	<50m			<100m			>100m		
	3min	5min	10min	3min	5min	10min	3 min	5min	10min
BCCH	1								
MAWA	1			11					
BTBW	1								
WIWR				1					
REVI	1	1							
OVEN									
NOPA					1				

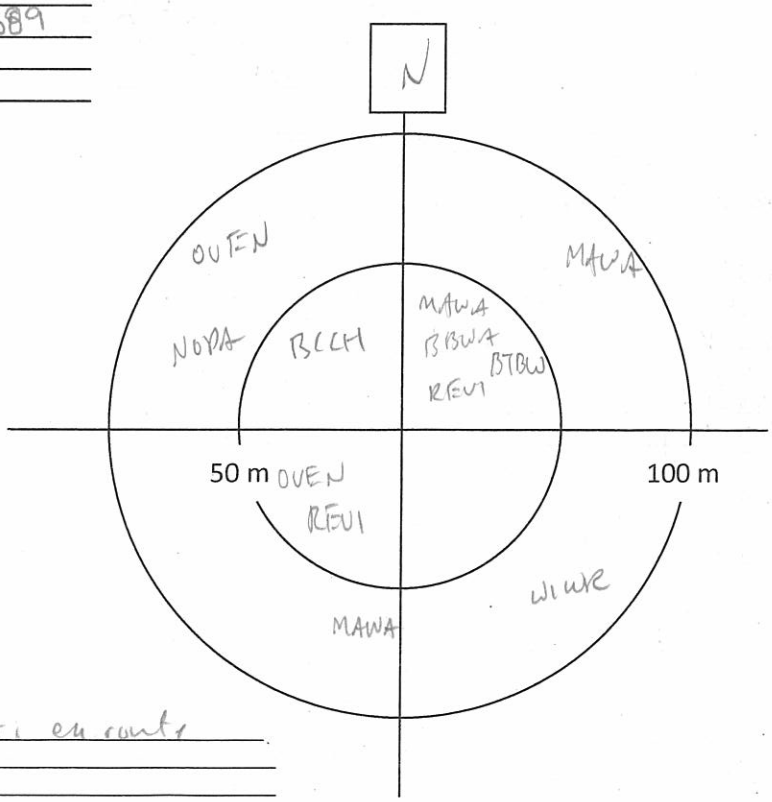

Notes/Incidental observations: RESQ, moose tr. en route

AMEC Earth & Environmental
160 Traders Blvd East, Mississauga, ON L4Z 3K7
Tel: (905) 568-2929
Cell: (416) 459-6228
Fax: (905) 568-1686

Project Number: TC121522
Survey Date: June 1, 2013

Point Count Name: BB110
UTM: 058 17T 462554, 5312984
Start Time 07:43
Habitat: ES13p, ES9p.

Species	<50m			<100m			>100m		
	3min	5min	10min	3min	5min	10min	3 min	5min	10min
NAWA	1		1						
RCKI	1								
WTSP							1		1
HETH	1			1					
YBSA								1	
YBFL								11	
CAGO								1	
BHVI					1	1			
MAWA						1			

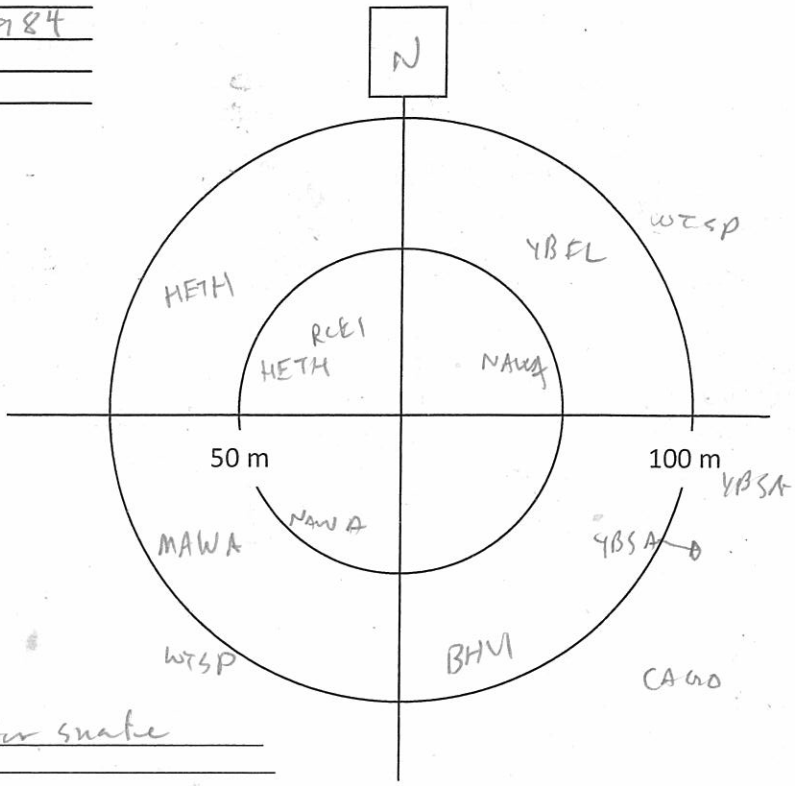

Notes/Incidental observations: upt 059 - Garter snake

Point Count Name: BB107
UTM: 060 462355, 5313896
Start Time 08:05
Habitat: Alder swamp. - whole

Species	<50m			<100m			>100m		
	3min	5min	10min	3min	5min	10min	3 min	5min	10min
TEWA	1			1	1				
REVI									
ALFL	1					1			
COYE	1					1			
WTSP	1	1		1	1				1
REVI							1		
NAWA							1		
RCKI									1
YBSA									11
NOFL				1					

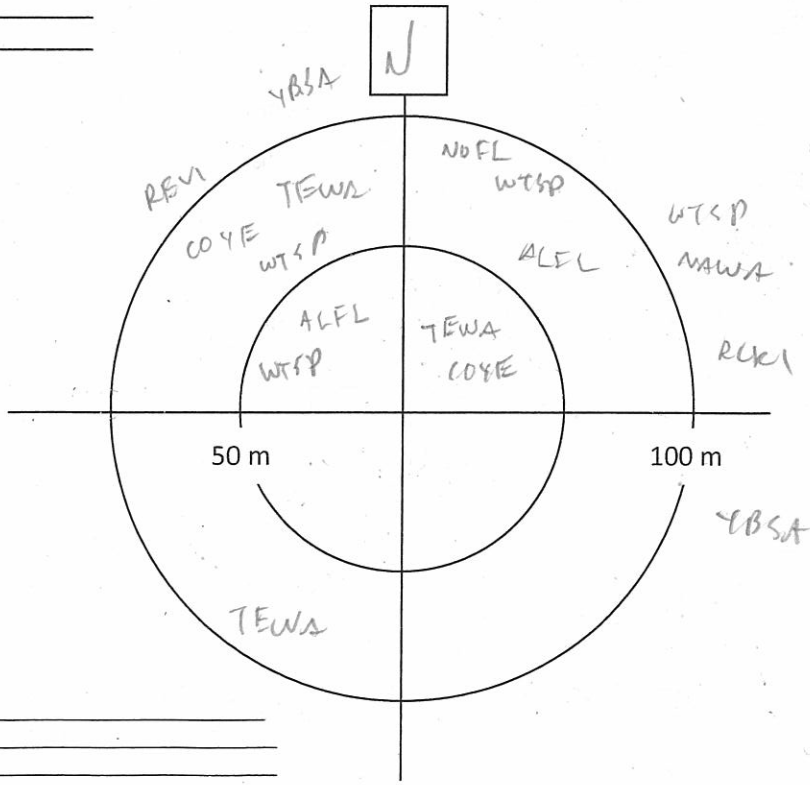

Notes/Incidental observations: RBSA

Project Number: TCI21522
Survey Date: June 1, 2013

AMEC Earth & Environmental
160 Traders Blvd East, Mississauga, ON L4Z 3K7
Tel: (905) 568-2929
Cell: (416) 459-6228
Fax: (905) 568-1686

Point Count Name: BB94
UTM:
Start Time 08:07
Habitat: Spruce (b) ES8

Species	<50m			<100m			>100m		
	3min	5min	10min	3min	5min	10min	3 min	5min	10min
~~AMRE~~ TEWA				1		1			
YBFL	1			1	11				
HETH								1	
WTSP					1	11			
RCKI						1			
NAWA						1			1
BLJA						1			
MAWA						1			

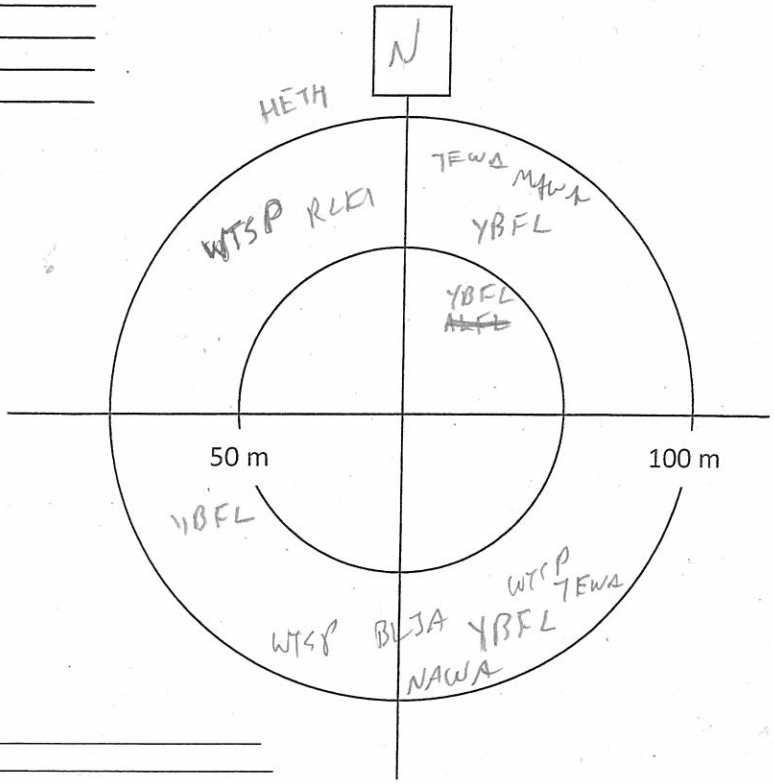

Notes/Incidental observations:

Point Count Name: BB97
UTM: 061-461946, 5313495
Start Time 08:50
Habitat: Tamarack, Sb - ES13p.

Species	<50m			<100m			>100m		
	3min	5min	10min	3min	5min	10min	3 min	5min	10min
MAWA	11								
RCKI	11								
NAWA	1			1					
HETH				1			1		
WTSP				1					
YBSA						1			
LEFL			1						

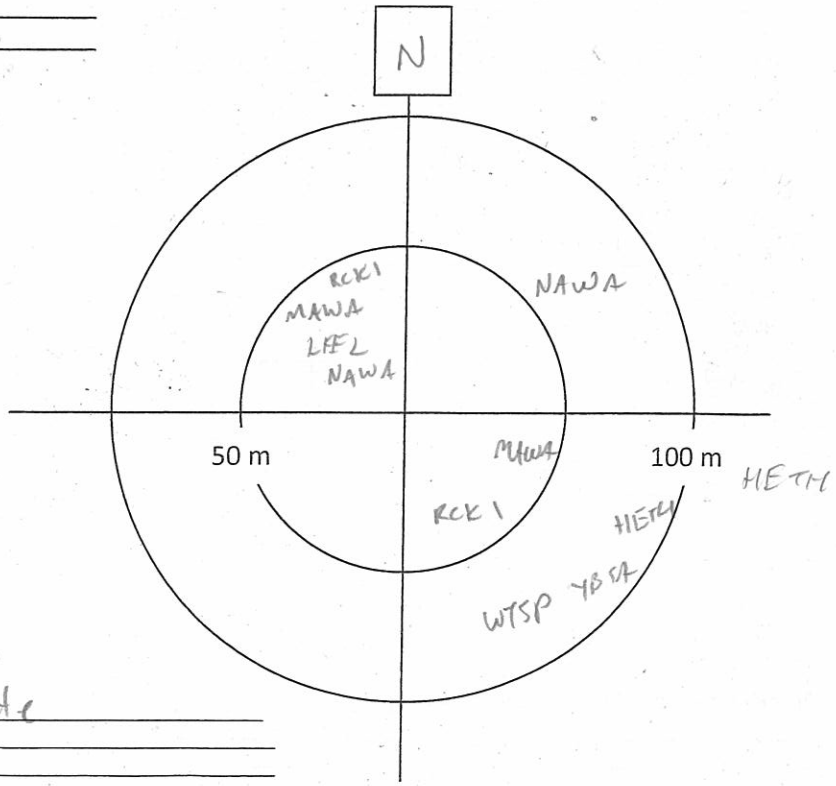

Notes/Incidental observations: SPAR ? en route

AMEC Earth & Environmental
160 Traders Blvd East, Mississauga, ON L4Z 3K7
Tel: (905) 568-2929
Cell: (416) 459-6228
Fax: (905) 568-1686

Project Number: TC121522
Survey Date: June 1, 2015

Point Count Name: BB101
UTM: 062 - 17 T 461987, 5313260
Start Time 09:09
Habitat: FS SF - ND Pj

Species	<50m			<100m			>100m		
	3min	5min	10min	3min	5min	10min	3 min	5min	10min
MAWA	I								
NAWA	II								
BLBW	I								
METH							I		
OVEN							I		
RCKI	I								
GCKI			I						
SACR								I	

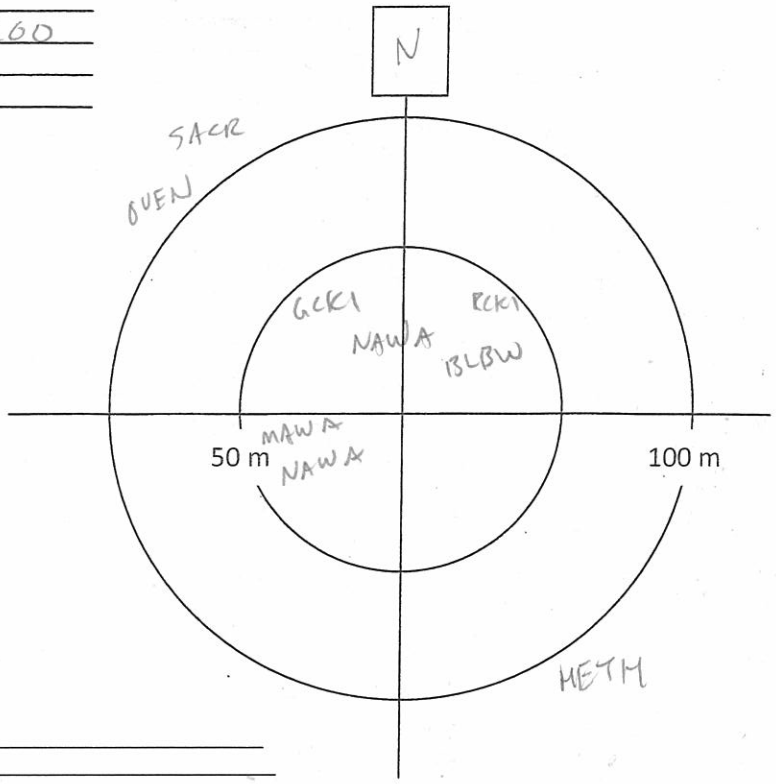

Notes/Incidental observations:

Point Count Name: BB100
UTM:
Start Time 09:33
Habitat: Birch - ES3 / Shrub/alder

Species	<50m			<100m			>100m		
	3min	5min	10min	3min	5min	10min	3 min	5min	10min
NOWA	I								
NAWA	II			I					
YRWA				I					
GCKI	I								
BBWA	I								
COYE				I					
WTSP									
COGR				II		III			

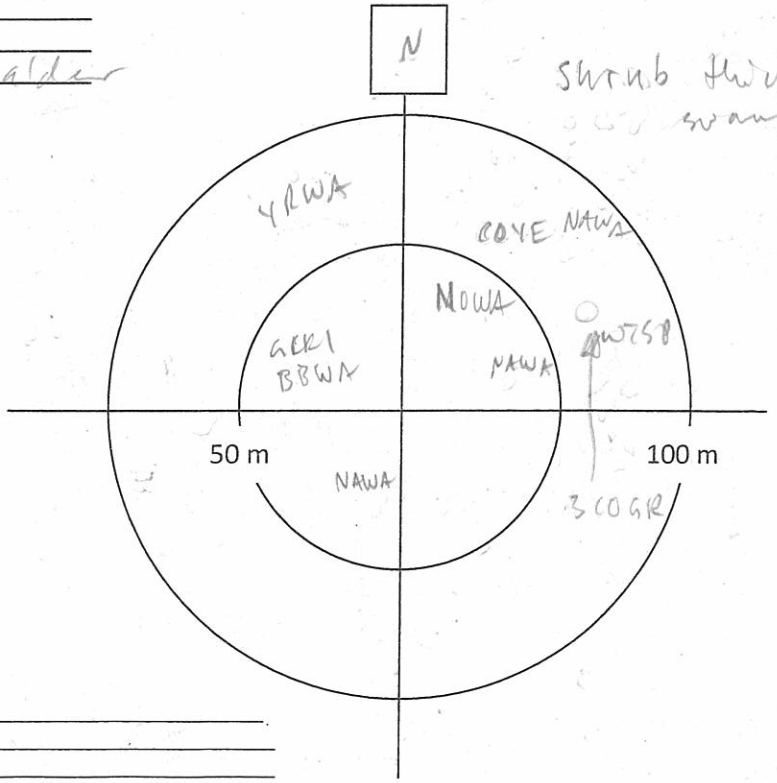

shrub thicket swamp/alder

Notes/Incidental observations: SPPE calling

Project Number: TC121522
Survey Date: June 1, 2013

AMEC Earth & Environmental
160 Traders Blvd East, Mississauga, ON L4Z 3K7
Tel: (905) 568-2929
Cell: (416) 459-6228
Fax: (905) 568-1686

Point Count Name: BB96
UTM:
Start Time 09:54
Habitat: spruce and alder – doesn't fit any spruce ES code

Species	<50m			<100m			>100m		
	3min	5min	10min	3min	5min	10min	3 min	5min	10min
NOWA	1								
RCKI	11								
NAWA	1			1					
TEWA									
YRWA						1			
YBFL					1				
MAWA			1						

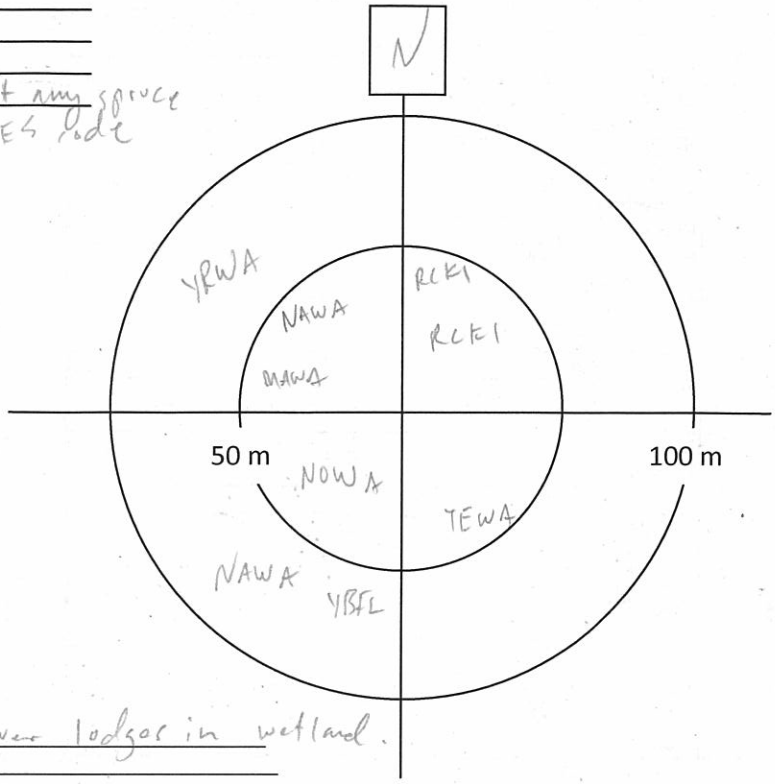

Notes/Incidental observations: en route – beaver lodges in wetland.

Point Count Name: BB99
UTM:
Start Time 10:24
Habitat: ES 6m – upland Poplar w Sb/BF

Species	<50m			<100m			>100m		
	3min	5min	10min	3min	5min	10min	3 min	5min	10min
OVEN	1			1					
LEFL	1								
WIWR	1								
REVI	1								
SWTH	1								
YRWA	11				1				
BBWA		1	1						
NAWA	1								
MOWA						1			
BLBW			1						

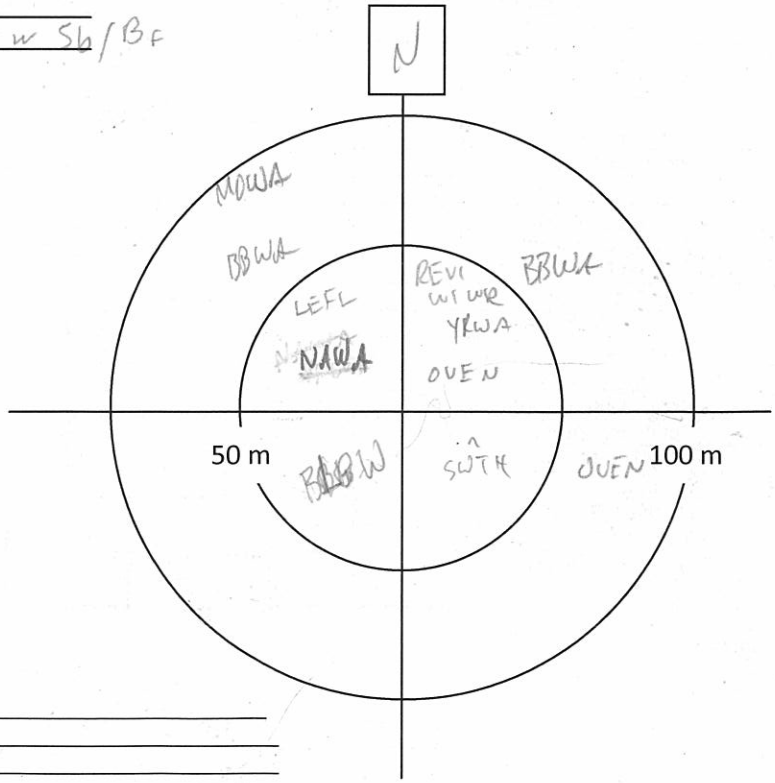

Notes/Incidental observations: RESQ

WIWA?

Project Number:
Survey Date:

AMEC Earth & Environmental
160 Traders Blvd East, Mississauga, ON L4Z 3K7
Tel: (905) 568-2929
Cell: (416) 459-6228
Fax: (905) 568-1686

Other Wildlife Observations **Species at Risk

Obs?	Species	Waypoint	Notes
	Virginia Opossum		
	Shrew sp		
	Star-nosed Mole		
	Bat Sp.		
	Eastern Cottontail		
	Snowshoe Hare		
	European Hare		
	Eastern Chipmunk		
	Woodchuck		
	Grey Squirrel		
	Red Squirrel		
	Flying Squirrel sp		
	Beaver		
	Mouse sp		
	Muskrat		
	Meadow Vole		
	Porcupine		
	Coyote		
	Grey Wolf		
	Red Fox		
	Black Bear		
	Raccoon		
	Mink		
	Striped Skunk		
	White-tailed Deer		
	Moose		
	Snapping Turtle**		
	Midland Painted Turtle		
	Western Painted Turtle		
	Northern Map Turtle**		
	Blanding's Turtle**		
	Eastern Gartersnake		
	East. Ribbon Snake**		
	Northern Watersnake		
	Redbelly Snake		
	Brown Snake		
	Smooth Greensnake		
	Ringneck Snake		
	Eastern Milksnake**		
	Red-spotted Newt		
	Bl.-spotted Salamander		
	Spotted Salamander		
	Four-toed Salamander		
	Northern Redback		
	American Toad		
	Western Chorus Frog**		
	Boreal Chorus Frog		
	Spring Peeper		
	Gray Treefrog		
	Bullfrog*		
	Northern Green Frog		
	Wood Frog		
	Northern Leopard Frog		
	Mink Frog		

Other Species	Waypoint	Notes

Notes

Project Number: TC121522
Survey Date: June 1, 2013

AMEC Earth & Environmental
160 Traders Blvd East, Mississauga, ON L4Z 3K7
Tel: (905) 568-2929
Cell: (416) 459-6228
Fax: (905) 568-1686

Point Count Name: ~~BB102~~ BB103
UTM: 063 - E414 461273, 5312824
Start Time 10:46
Habitat: ES 6m / Spruce ES

Species	<50m			<100m			>100m		
	3min	5min	10min	3min	5min	10min	3 min	5min	10min
GCKI	1								
NAWA	1								
REVI							1		
WTSP	~~1~~			1					
RCKI				1					
WIWR						1			
BPWA			1			1			

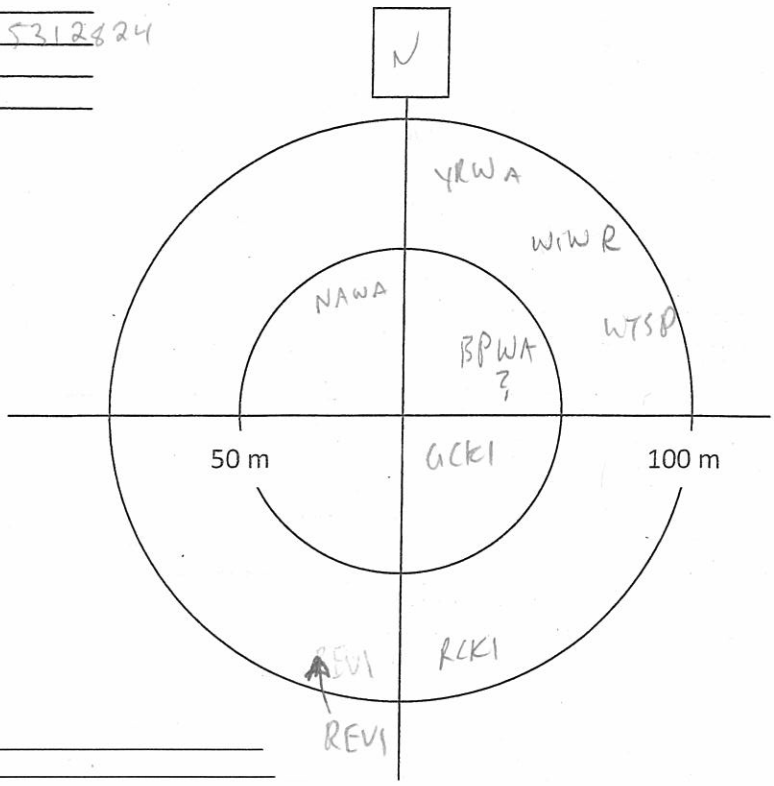

Notes/Incidental observations: RES Q

Point Count Name: BB104
UTM: 064 - 0461548, 5312712
Start Time 11:06
Habitat: Birch/Poplar - ES 4m

Species	<50m			<100m			>100m		
	3min	5min	10min	3min	5min	10min	3 min	5min	10min
BBWA	1								
MAWA				1					
RBNU	1								
NAWA				1					
NOPA				1					

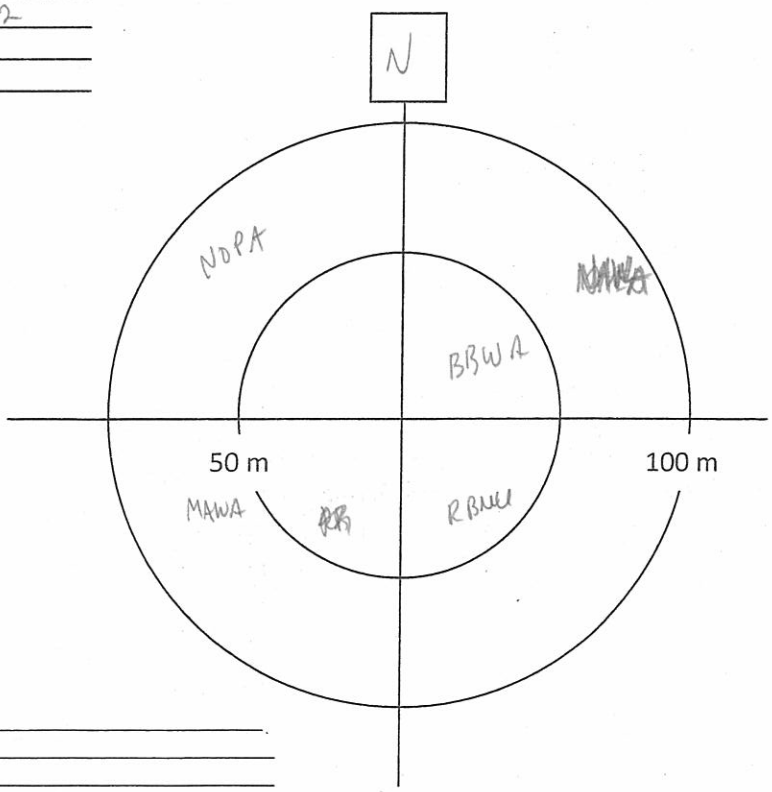

Notes/Incidental observations:

AMEC Earth & Environmental
160 Traders Blvd East, Mississauga, ON L4Z 3K7
Tel: (905) 568-2929
Cell: (416) 459-6228
Fax: (905) 568-1686

Breeding Bird Point Count Survey

Project Name: IMG		**Project Number:** TC121522	
Crew Leader: JEFF BANDOW	**Observers:**		
Date: JUNE 1/2013	**Start Time (24hr):** 05:35am	**End Time (24hr):** 10:45am	
Weather: CALM SOMEWHAT CLOUDY	**Temperature:**	**Wind:** 1	**Precipitation (Circle):** (0) None - 1 Haze/Fog 2 Drizzle 3 Rain

Point Count Name: B173
UTM:
Start Time 5:35 - 5:45am
Habitat: REGEN CLEARCUT W/ MATURE REMNANT SF (DECID. REGEN) + SCATTERED CEDAR

Species	<50m			<100m			>100m		
	3min	5min	10min	3min	5min	10min	3 min	5min	10min
MOWA	1					1			
WIWR	1								
CSWA	1								
NOPA	1								
VEER						1			
YRWA				1					
WTSP				IIII			II		
BHVI				1					
GRJA						1			
HETH					1				
YBSA									1
SWTH				1					
RENI				1					
MAWA				1					

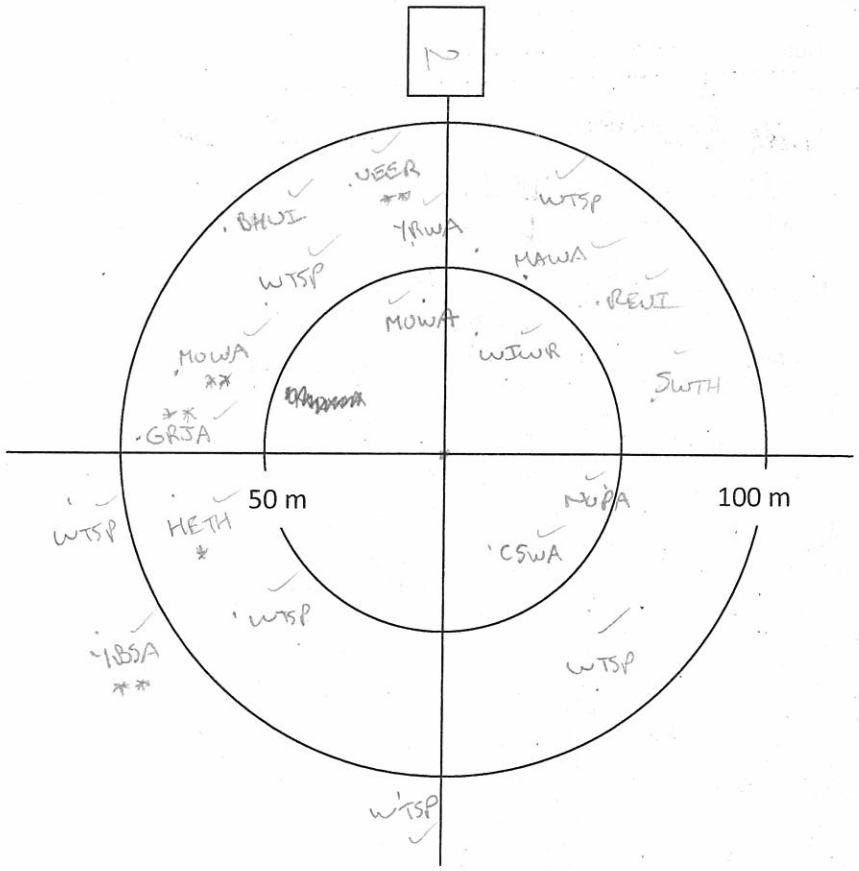

Notes/Incidental observations:

Project Number: IMG
Survey Date: JUNE 1/2013

AMEC Earth & Environmental
160 Traders Blvd East, Mississauga, ON L4Z 3K7
Tel: (905) 568-2929
Cell: (416) 459-6228
Fax: (905) 568-1686

Point Count Name: B172
UTM: _____
Start Time 5:58 - 6:08
Habitat: SAME AS B173, BUT NO CEDAR AND SOME At + Bf
LOTS OF At REGEN + B. HAZEL

Species	<50m			<100m			>100m		
	3min	5min	10min	3min	5min	10min	3 min	5min	10min
MOWA	1								
WIWR	1								
AMRO		1							
REVI	1								
NAWA	1								
SWTH				1					
WTSP				IIII					
HETH					1				
RBGR				1					
RUGR					1				
MAWA				1					
BTNW				1				1	
DOWO					1				
HAWO				1					
CANG									1

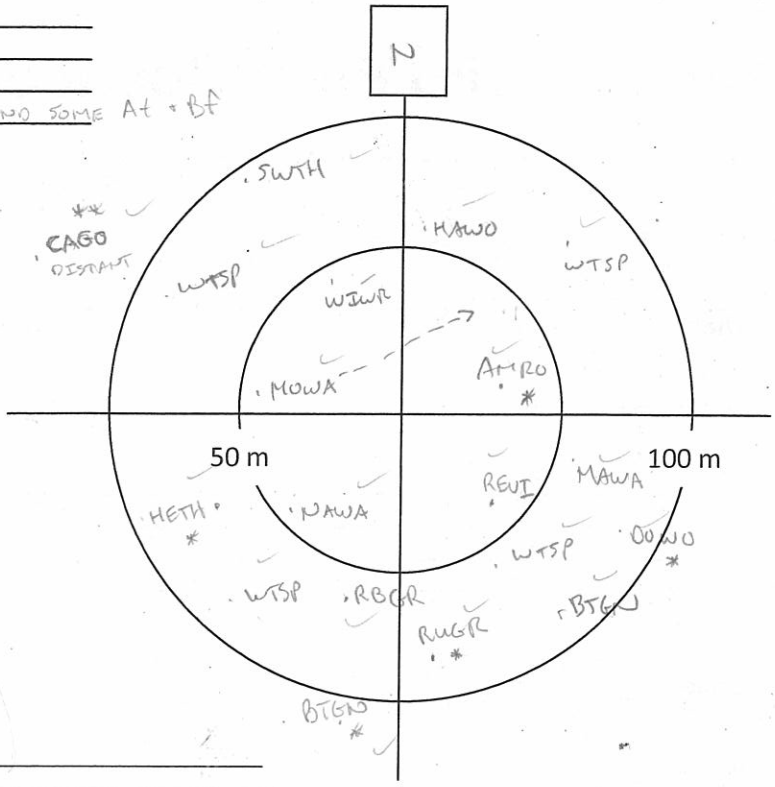

Notes/Incidental observations: _____

Point Count Name: B176
UTM: _____
Start Time 6:18 - 6:28
Habitat: CEDAR 20 Bf 30 Pw 10 Sw 10 Sc 10 Bw 20
GROUND VEG SPARSE

Species	<50m			<100m			>100m		
	3min	5min	10min	3min	5min	10min	3 min	5min	10min
NOPA	1								
WIWR	II								
MAWA		1		II					
REVI				1					
OVEN				1		1			
WTSP				1					
RBNU				1					
YBSA				1					
BTNW				1					
COGR									1
BLJA				1					
BBWA				1					
YRWA						1			

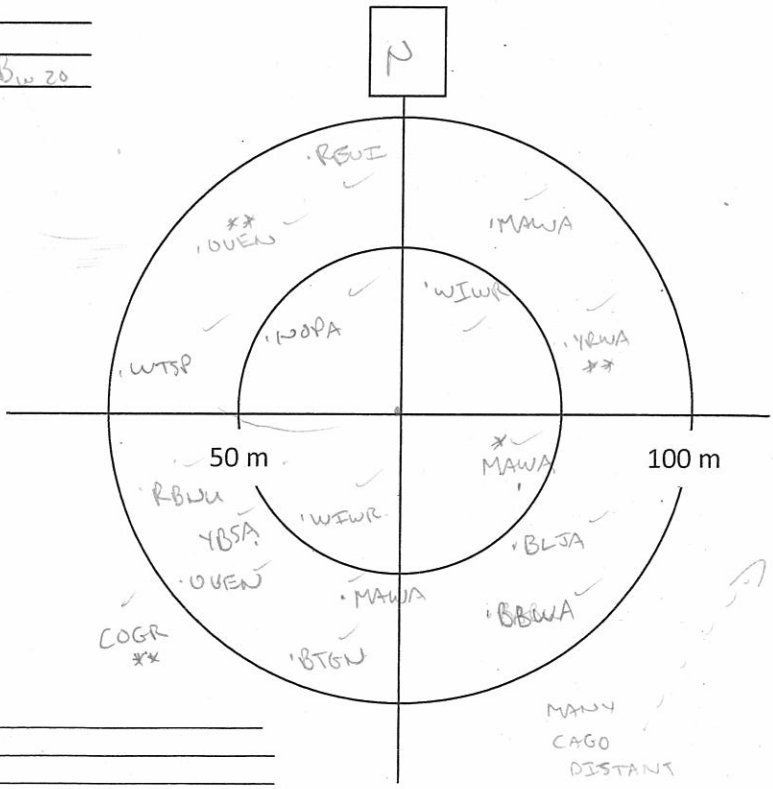

Notes/Incidental observations: _____

Project Number: IMG
Survey Date: JUN 1/2013

AMEC Earth & Environmental
160 Traders Blvd East, Mississauga, ON L4Z 3K7
Tel: (905) 568-2929
Cell: (416) 459-6228
Fax: (905) 568-1686

Point Count Name: B171
UTM:
Start Time 6:41 - 6:51
Habitat: EDGE OF CLEARCUT + CONIFER FOREST (BF, SW)
WITH REGEN. SOME BW ~10%

Species	<50m			<100m			>100m		
	3min	5min	10min	3min	5min	10min	3 min	5min	10min
WTSP	1			IIII					
CSWA	1			1					
NAWA	1								
BCCH	1								
NOPA		1							
BLBW	1								
YRWA					1				
MAWA				II					
REVI				1					
LISP				1					
HETH				II					1
AMRI							1		
MOWA					1				
RUGR					1				
WIWR									1

COLO 1

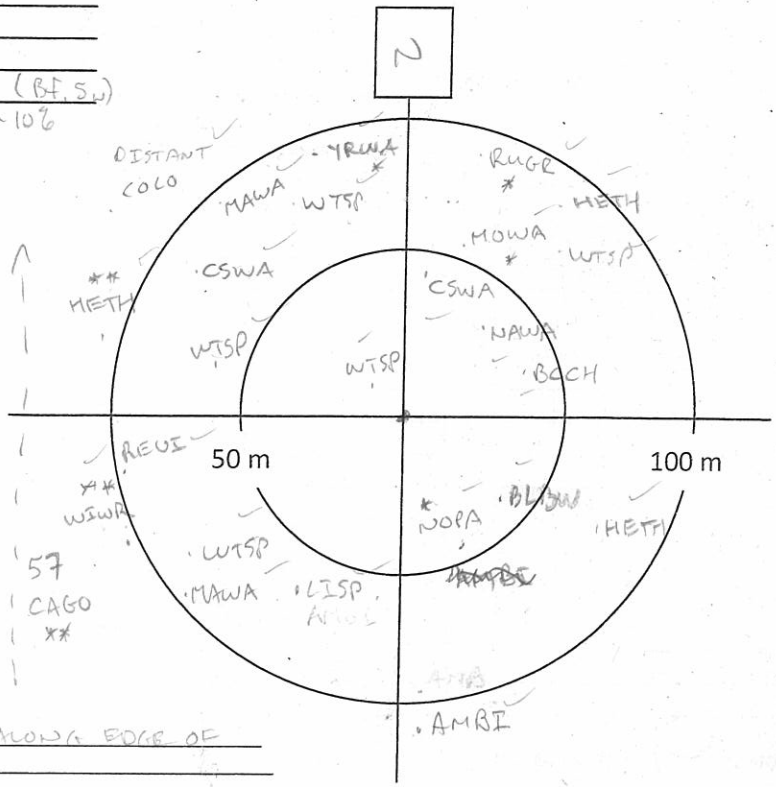

Notes/Incidental observations: AMBI IN DITCH ALONG EDGE OF LOGGING ROAD

Point Count Name: B170
UTM:
Start Time 7:06 - 7:16
Habitat: CLEARCUT, SOME REGEN
MIXED + CONIF. FOREST SURR.

Species	<50m			<100m			>100m		
	3min	5min	10min	3min	5min	10min	3 min	5min	10min
MOWA		1			1				
WTSP	II			III					
CSWA	1			1					
LISP				1		1			
YRWA						1			
MAWA				1					
HETH				1			1		
RCKI						1			
RBNU									1
NAWA								1	
WIWR							1		
YBFL							1		
YBSA								1	

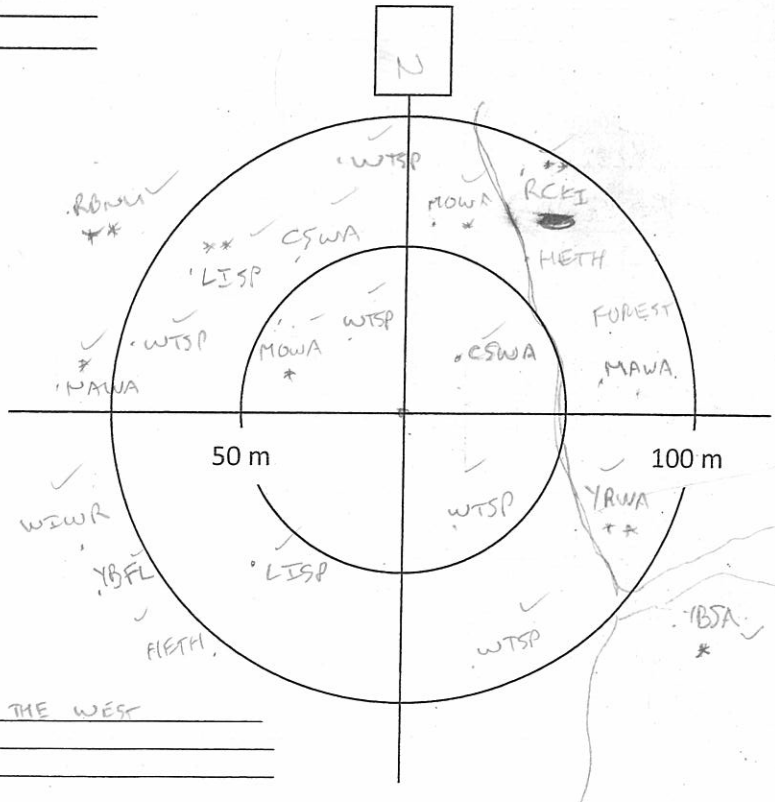

Notes/Incidental observations: FOREST OVER 100m TO THE WEST

Project Number: IMG
Survey Date: 1-JUN-13

AMEC Earth & Environmental
160 Traders Blvd East, Mississauga, ON L4Z 3K7
Tel: (905) 568-2929
Cell: (416) 459-6228
Fax: (905) 568-1686

Point Count Name: B175
UTM:
Start Time 7:48 - 7:58
Habitat: SAME AS B168 - LOW SHRUBS ABUNDANT
MORE SPP. = KALANGU, GAUHISP, VACOCCI, ILEVERT LEATHERLEAF

Species	<50m			<100m			>100m		
	3min	5min	10min	3min	5min	10min	3 min	5min	10min
WTSP	1			11			11		
NAWA	1								
COYE	1								
MAWA		1	1						
YBFL	1								
RBNU				1					
ALFL					1				
SWSP					1		1		
WIWR						1	1		
HETH				1					
RCKI						1			
SWTH				1					
GCKI				1					
YRWA				1					
RUGR							1		
CORA							1		

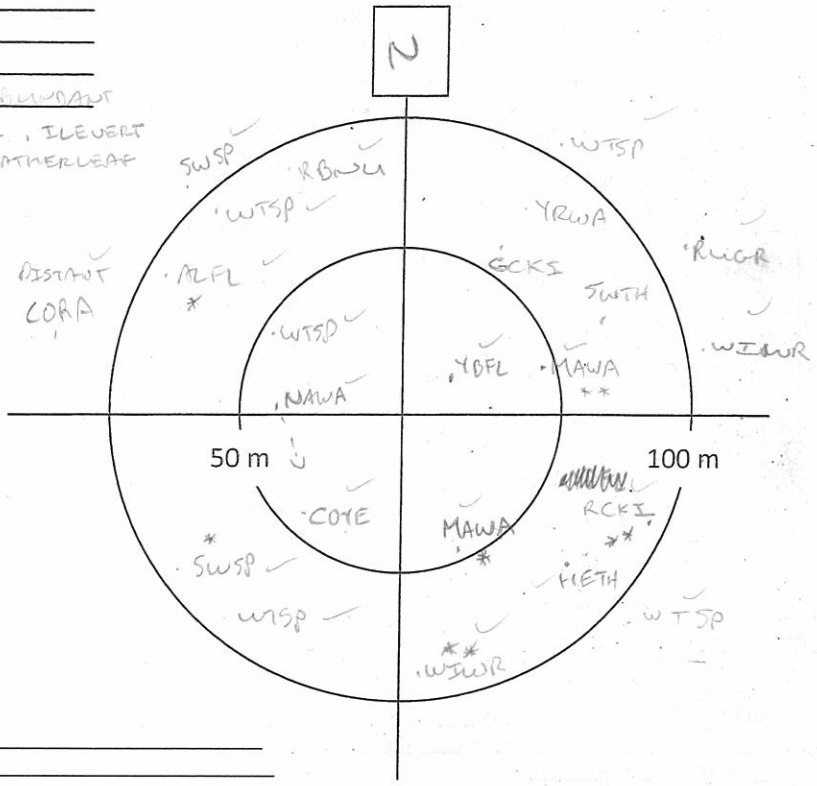

Notes/Incidental observations:

Point Count Name: B169
UTM:
Start Time 7:26 - 7:36
Habitat: Sb ORGANIC FEN -- SPHAG, RHO GROE
10-25% TREES SOME TAMARACK KALPOLI, CARTRIS

Species	<50m			<100m			>100m		
	3min	5min	10min	3min	5min	10min	3 min	5min	10min
MAWA		1							
GRJA			1						
CEDW			1						
NAWA			1			1			
RBNU				1					
ALFL				1			1		
SWSP				1					
COYE					1	1			
GCKI				1					
YRWA				1	1				
BLJA				11					
HETH				1					
WIWR				1					
WTSP							1		

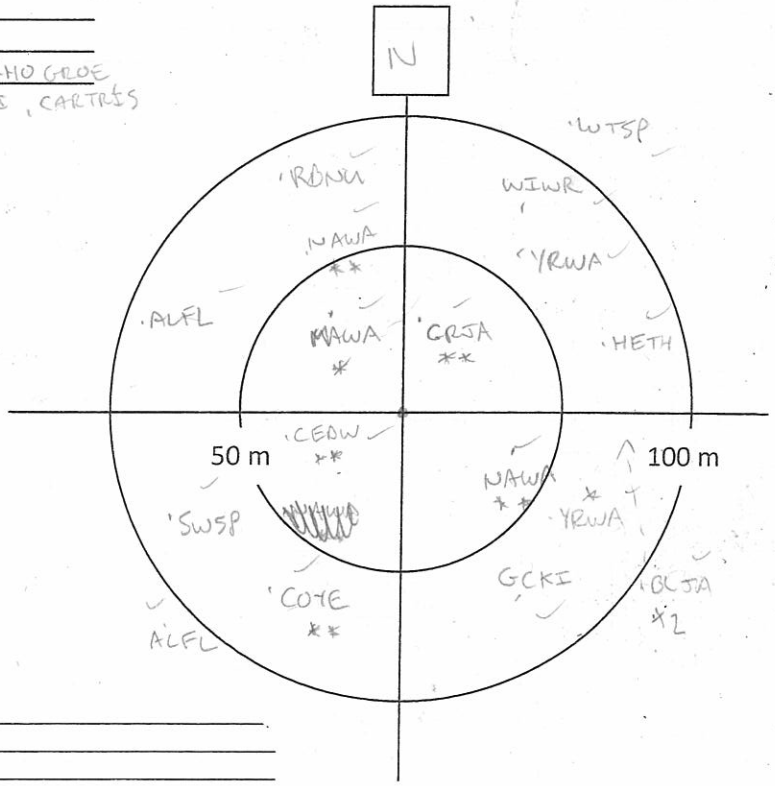

Notes/Incidental observations:

Project Number: IMG
Survey Date: JUNE 1/2013

AMEC Earth & Environmental
160 Traders Blvd East, Mississauga, ON L4Z 3K7
Tel: (905) 568-2929
Cell: (416) 459-6228
Fax: (905) 568-1686

Point Count Name: B177
UTM: _____
Start Time 8:13 - 8:23
Habitat: CEDAR 80% BW 70% (UPLAND)

Species	<50m			<100m			>100m		
	3min	5min	10min	3min	5min	10min	3 min	5min	10min
BCCH			1						
BTNW	1					1			
RCKI		1							
NOPA				1					
COYE				1					
NAWA				1					
NOWA					1				
YBSA				1					
WTSP				1		1			
WIWR				1					
MAWA				1					
HETH				1					
PUFI					1				

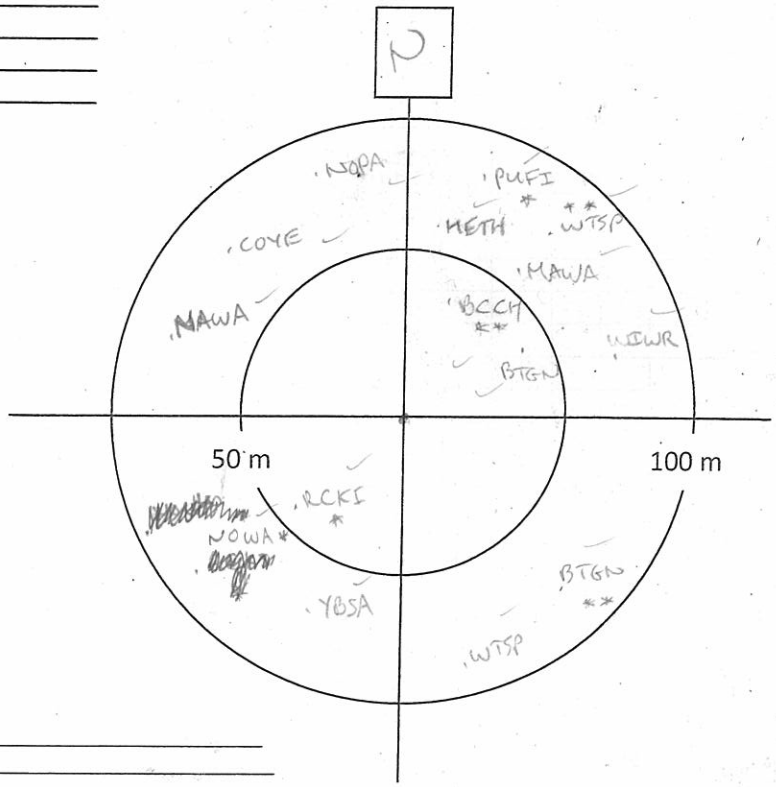

Notes/Incidental observations: _____

Point Count Name: B178
UTM: _____
Start Time 8:32 - 8:42
Habitat: SB ORGANIC (PEAT) SWAMP - SOME CEDAR (5%) (50% TREE COVER)
DRIER THAN B169 & 175

Species	<50m			<100m			>100m		
	3min	5min	10min	3min	5min	10min	3 min	5min	10min
NAWA	1								
GCKI	1								
MAWA	1		1						
RCKI	1								
YRWA				1		1			
AMBI								1	
WIWR				1					
BTNW				1					
HETH				11					
BLJA						1			
SWTH					1				

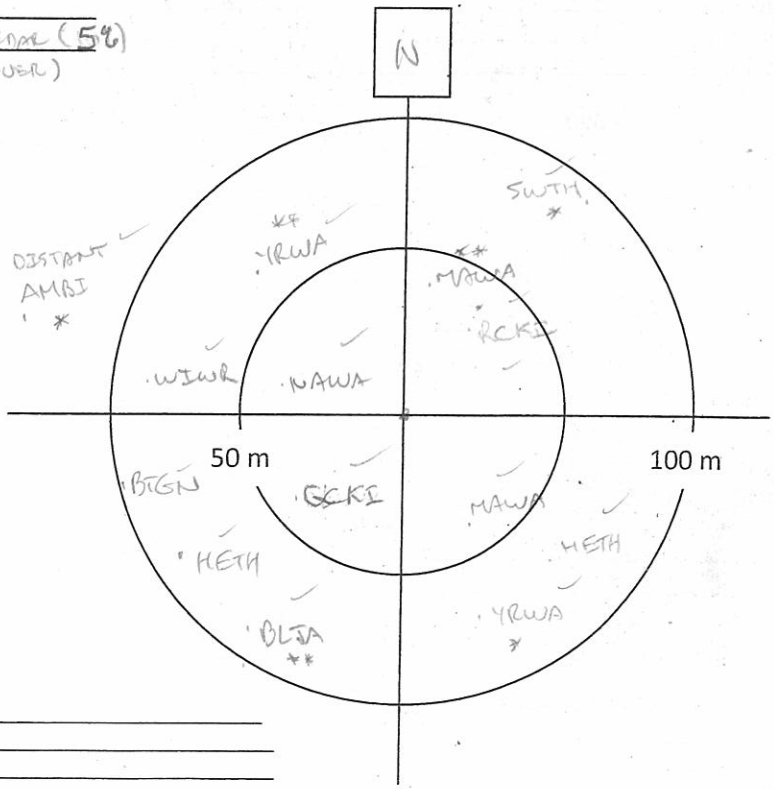

Notes/Incidental observations: _____

Project Number: IMG
Survey Date: JUNE 1/2013

AMEC Earth & Environmental
160 Traders Blvd East, Mississauga, ON L4Z 3K7
Tel: (905) 568-2929
Cell: (416) 459-6228
Fax: (905) 568-1686

Point Count Name: B179
UTM: _____
Start Time 852 - 9:02
Habitat: Bw 60 Mr 10 Bf 10 Sw 10 At 10
GROUND VEG SOMEWHAT SPARSE

Species	<50m			<100m			>100m		
	3min	5min	10min	3min	5min	10min	3 min	5min	10min
NOPA	1								
BHVI	1								
BTBW	1								
SWTH	1								
YRWA	1								
REVI				1	1				
PUFI					11				
OVEN				1					
RCKI				1					
DOWO				1					
WIWR						1			

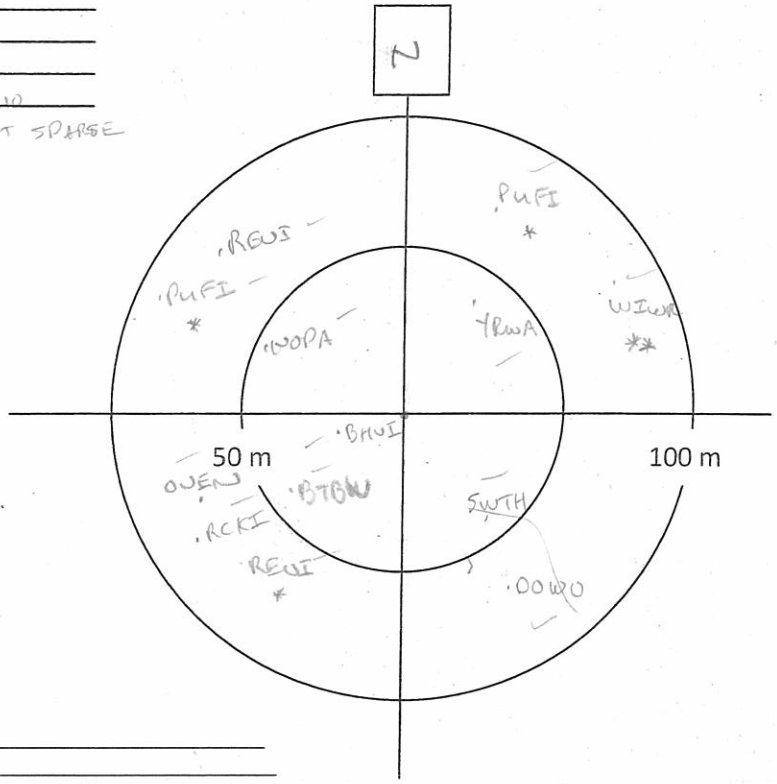

Notes/Incidental observations: _____

Point Count Name: B180
UTM: _____
Start Time 9:15 - 9:25 * CEDER
Habitat: MIXED - Bf Sw 50% Bw Mr At 50%
GROUND SPARSE - MAIANTHEMUM, TRIENTALIS, SHRUBS OCCASSIONAL Mm, B. HABEL

Species	<50m			<100m			>100m		
	3min	5min	10min	3min	5min	10min	3 min	5min	10min
OVEN	1			1					
BHVI			1						
YRWA	1			11					
BTNW	1			1					
BLBW	1								
NAWA				1		1			
RUGR				1					
RCKI				1					
BLJA				1			1		
WIWR					1				

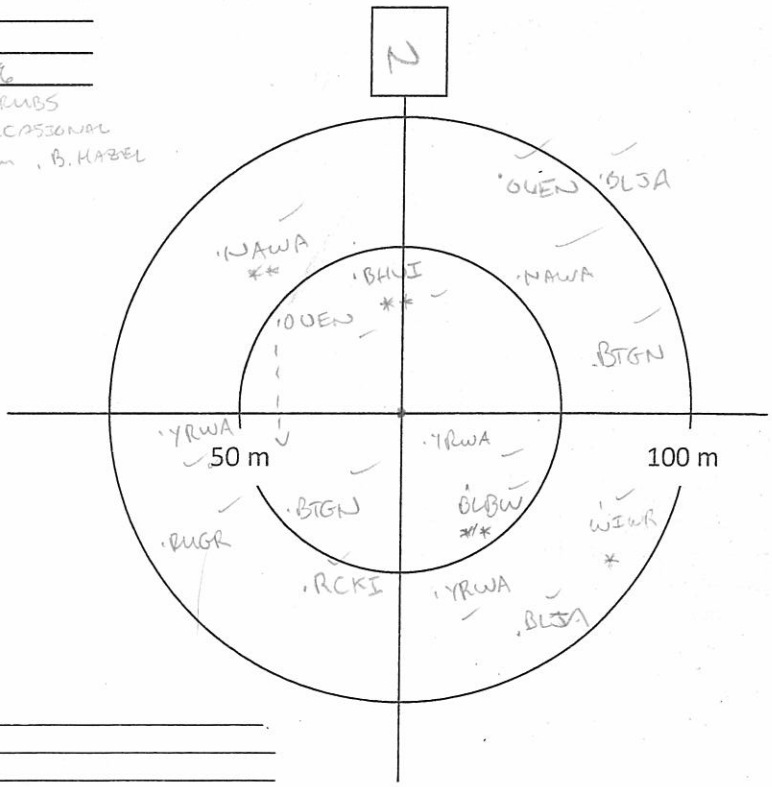

Notes/Incidental observations: _____

Project Number: IMG
Survey Date: JUNE 1/2013

AMEC Earth & Environmental
160 Traders Blvd East, Mississauga, ON L4Z 3K7
Tel: (905) 568-2929
Cell: (416) 459-6228
Fax: (905) 568-1686

Point Count Name: B174
UTM: _____
Start Time 9:43-9:53
Habitat: BF Sr Sw Cedar 80% Dw 20%
BF REGEN ABUNDANT Mr LOW. SP.

Species	<50m			<100m			>100m		
	3min	5min	10min	3min	5min	10min	3 min	5min	10min
YBSA	1								
BTBW	1								
YRWA		1							
REVI		1		1					
BTNW				III					
WIWR				1					1
SWTH				1					
OVEN						1			
NOPA				1					

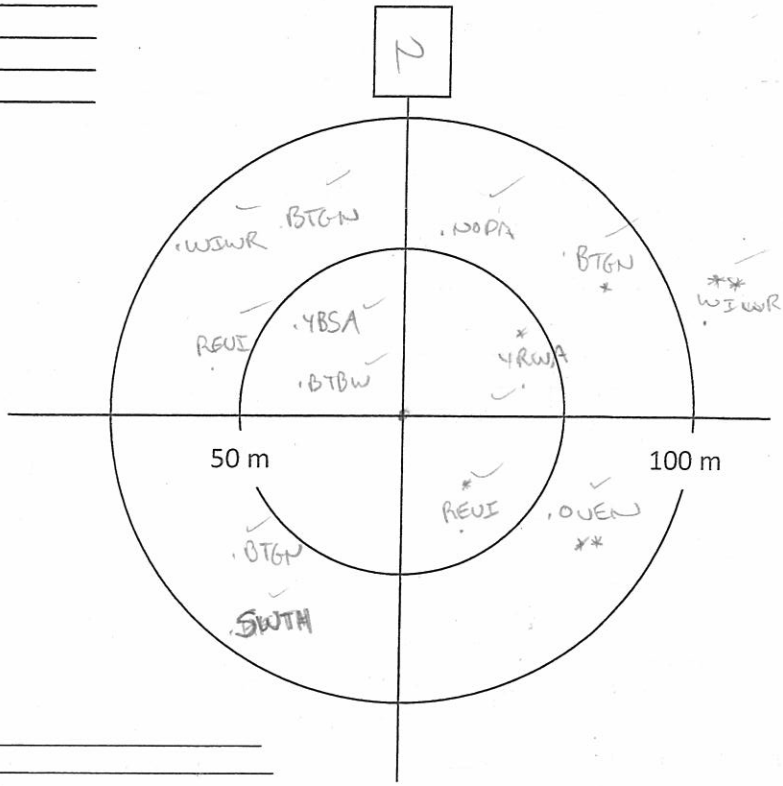

Notes/Incidental observations: ROAD AUDIBLE

Point Count Name: B181
UTM: _____
Start Time 10:18 - 10:28
Habitat: BF Sx 60% Bw Mr 40% GREEN CANOPY
D. HAZEL At Mr MORE COMMON THAN OTHER SPOTS ~20%

Species	<50m			<100m			>100m		
	3min	5min	10min	3min	5min	10min	3 min	5min	10min
BLBW	1								
HETH	1								
OVEN	1			1					
REVI	1			1	1				
NAWA		1							
BTBW	1								
BTNW						II			
NOPA				1					
YRWA				1					
RUGR				1					

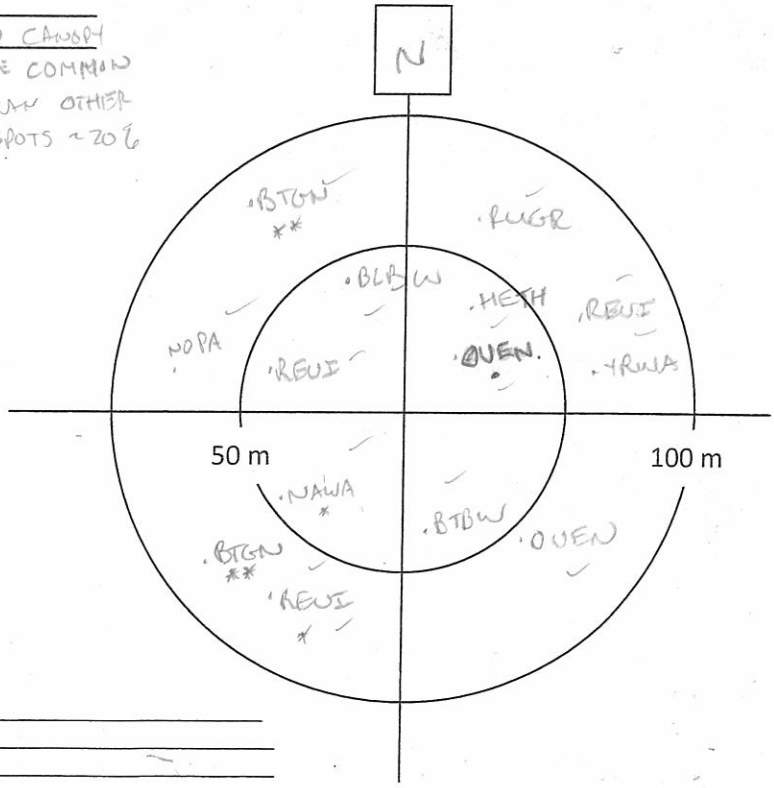

Notes/Incidental observations: _____

AMEC Earth & Environmental
160 Traders Blvd East, Mississauga, ON L4Z 3K7
Tel: (905) 568-2929
Cell: (416) 459-6228
Fax: (905) 568-1686

Breeding Bird Point Count Survey

Project Name: IAMGOLD		**Project Number:** TC121522	
Crew Leader:	**Observers:** Jon Pleizier		
Date: June 2, 2013	**Start Time (24hr):** 05:50	**End Time (24hr):** 08:20	
Weather: 100% cloud	**Temperature:**	**Wind:** 2-3	**Precipitation (Circle):** 0 None, 1 Haze/Fog, (2) Drizzle, 3 Rain

Wash outs along roads - increased walking.

Point Count Name: BB53
UTM: 068 17T 460116, 5333800
Start Time 06:15
Habitat: Poplar - ES7m

Species	<50m			<100m			>100m		
	3min	5min	10min	3min	5min	10min	3 min	5min	10min
BCCH	1								
OVEN	1			11					
NOPA	1			11					
BAWW	1								
HETH				11					
YRWA				1					

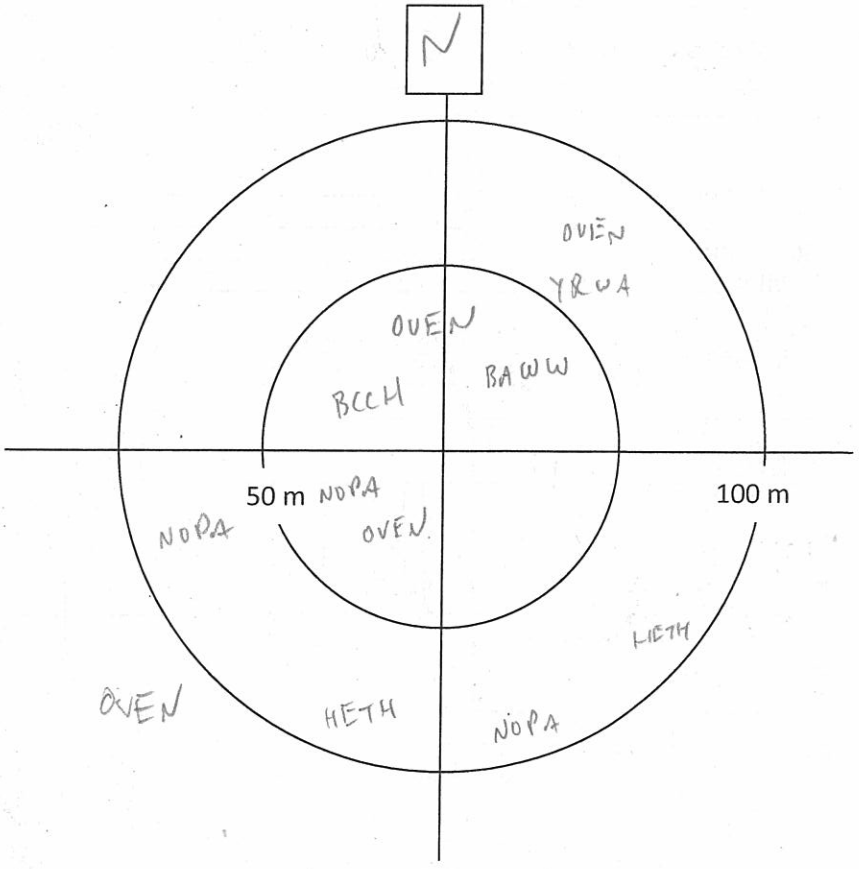

Notes/Incidental observations:

Project Number: TC121522
Survey Date: June 2, 2013

AMEC Earth & Environmental
160 Traders Blvd East, Mississauga, ON L4Z 3K7
Tel: (905) 568-2929
Cell: (416) 459-6228
Fax: (905) 568-1686

Point Count Name: BB44
UTM:
Start Time 06:36
Habitat: Lake / ES7c

Species	<50m			<100m			>100m		
	3min	5min	10min	3min	5min	10min	3 min	5min	10min
OVEN				1		1	1	1	
LEFL				1					
NAWA				1					
YBSA			1					1	
SPSA		1			1				
RUGR						1			
NOPA						1			
~~YBSA~~ HOME	1								
CAGO	III								

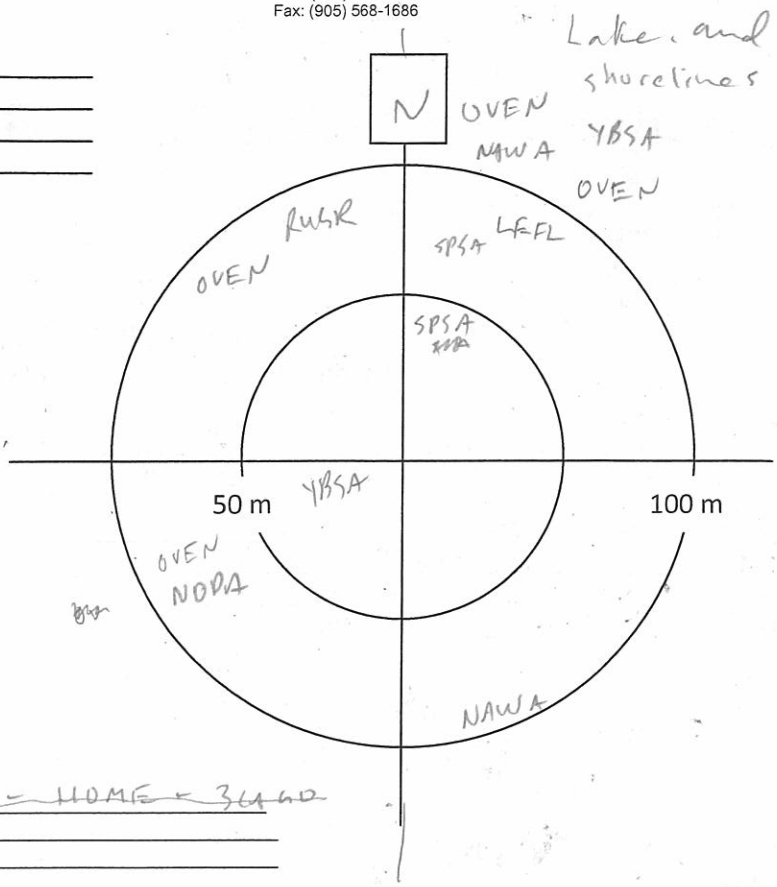

Notes/Incidental observations: ~~prior to count - HOME - 3CAGO~~
~~using lake~~
RESQ , SPPE

Point Count Name: BB46
UTM: 06:55
Start Time
Habitat: Aspen ES7c

Species	<50m			<100m			>100m		
	3min	5min	10min	3min	5min	10min	3 min	5min	10min
NAWA	1								
OVEN				1					
RCKI			1						
WIWR						1			

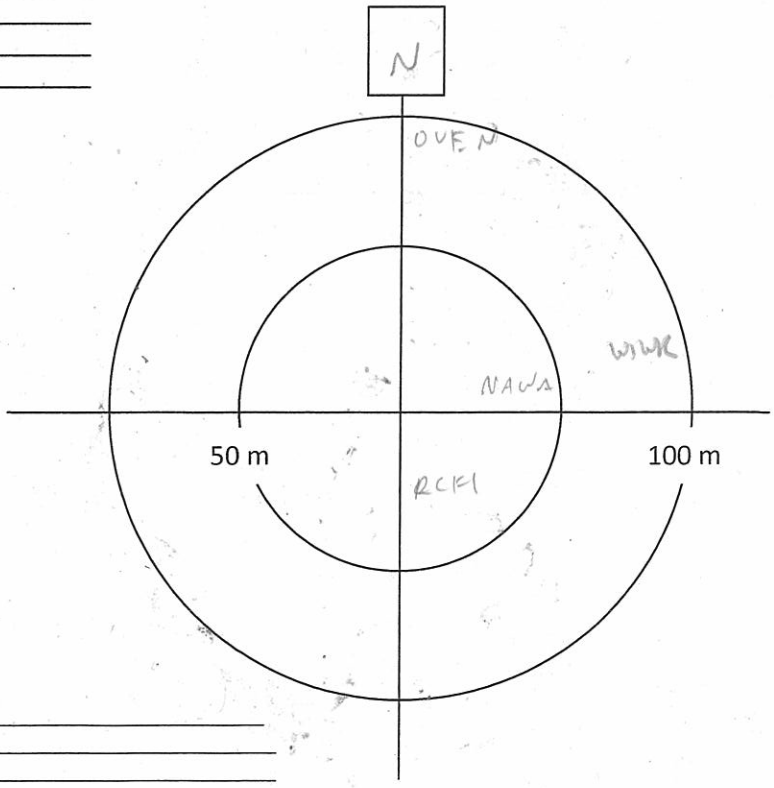

Notes/Incidental observations: PIWO en route

Project Number: TC121522
Survey Date: June 2, 2013

AMEC Earth & Environmental
160 Traders Blvd East, Mississauga, ON L4Z 3K7
Tel: (905) 568-2929
Cell: (416) 459-6228
Fax: (905) 568-1686

Point Count Name: 047
UTM: 070 177 460508, 5333127
Start Time 07:17
Habitat: spruce / Open muskeg (larch) ESH

Species	<50m			<100m			>100m		
	3min	5min	10min	3min	5min	10min	3 min	5min	10min
SWSP				1					
COYE	11								
NAWA	6			11					
WIWR				1					
RBGR							1		
MALL				11					
RCKI						11			
WTSP						1			

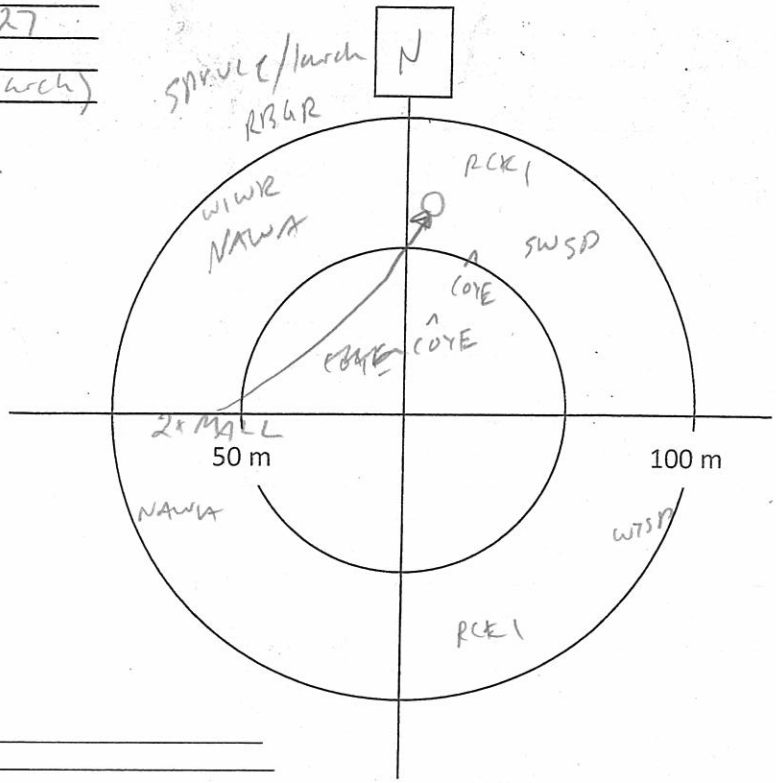

Notes/Incidental observations: RESQ enroute
SPPE

Point Count Name: BB50
UTM:
Start Time 07:45
Habitat:

Species	<50m			<100m			>100m		
	3min	5min	10min	3min	5min	10min	3 min	5min	10min
NAWA	1								
WTSP				1					
REVI					1				

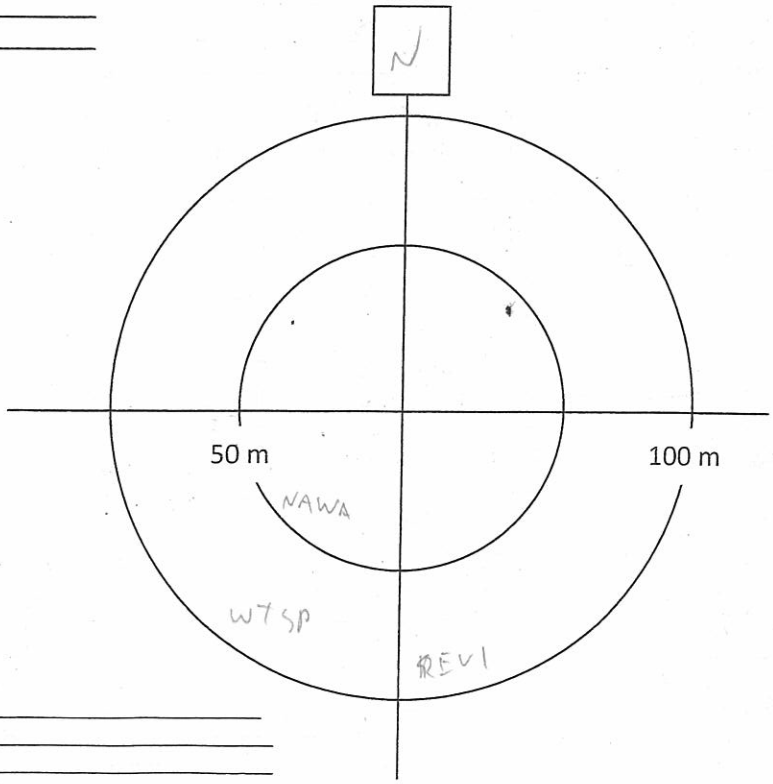

Notes/Incidental observations: SPPE

Project Number: TC121522
Survey Date: June 2, 2013

AMEC Earth & Environmental
160 Traders Blvd East, Mississauga, ON L4Z 3K7
Tel: (905) 568-2929
Cell: (416) 459-6228
Fax: (905) 568-1686

Point Count Name: BB51
UTM: 071 461025, 5332834
Start Time 08:10
Habitat: ES6M - Aspen

Species	<50m			<100m			>100m		
	3min	5min	10min	3min	5min	10min	3 min	5min	10min
NAWA	1								
NOPA				1					
OVEN				1					
BBWA				1					
BLCH		1							

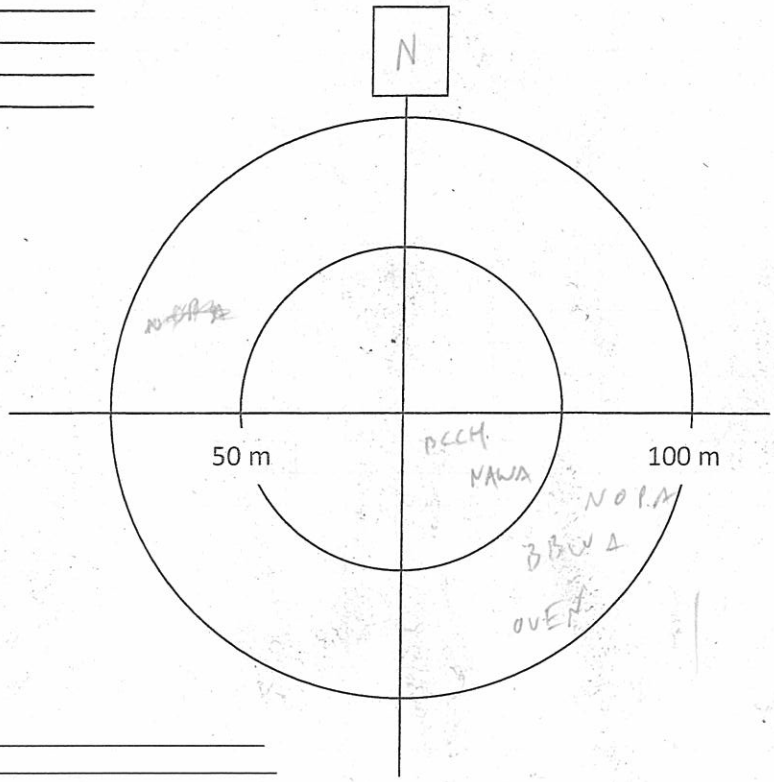

Notes/Incidental observations:

Point Count Name: 55
UTM:
Start Time
Habitat: Birch

Species	<50m			<100m			>100m		
	3min	5min	10min	3min	5min	10min	3 min	5min	10min
	1								

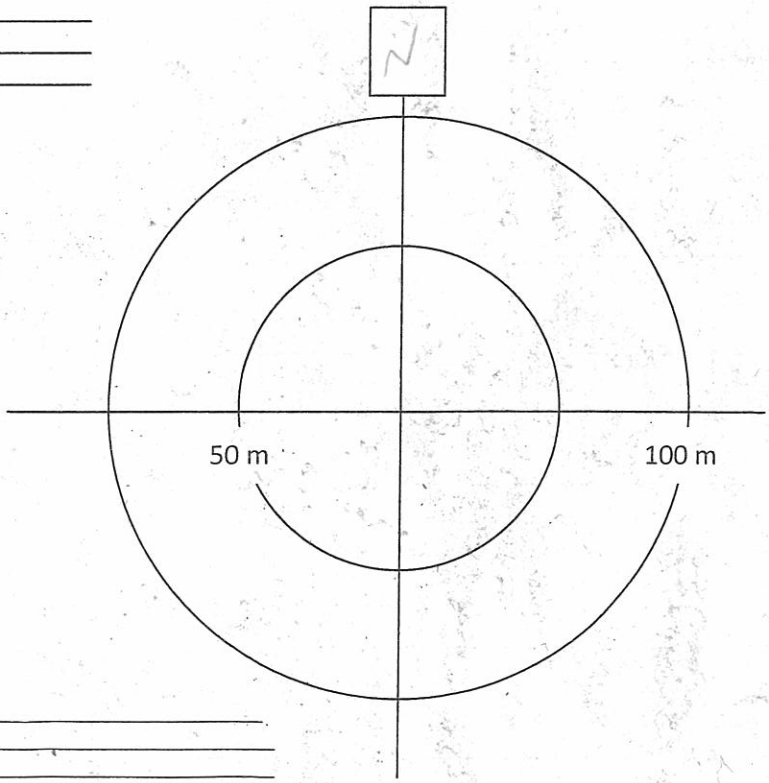

Notes/Incidental observations:

AMEC Earth & Environmental
160 Traders Blvd East, Mississauga, ON L4Z 3K7
Tel: (905) 568-2929
Cell: (416) 459-6228
Fax: (905) 568-1686

Breeding Bird Point Count Survey

Project Name: IMG		**Project Number:** TC121522	
Crew Leader: JEFF BALSDON	**Observers:**		
Date: JUNE 2, 2013	**Start Time (24hr):** 5:38 am	**End Time (24hr):** 08:30	
Weather: OVERCAST INT. DRIZZLE	**Temperature:**	**Wind:** 1	**Precipitation (Circle):** (0) None, 1 Haze/Fog, (2) Drizzle, 3 Rain

Point Count Name: B40
UTM:
Start Time 5:39 - 5:49
Habitat: CONIF. FOREST - Sb 80% Pw 10% Pj 10% ← POINT ON HILL
feather moss, ~~[illegible]~~ VACANGU, GAUPROC.

Species	<50m			<100m			>100m		
	3min	5min	10min	3min	5min	10min	3 min	5min	10min
DEJU				11					
NAWA	1			11					
YRWA	1	1				1			
HETH	1					1			
~~[illegible]~~									
RCKI				1					
WTSP				1			1		
OVEN				1					
WIWR					1				

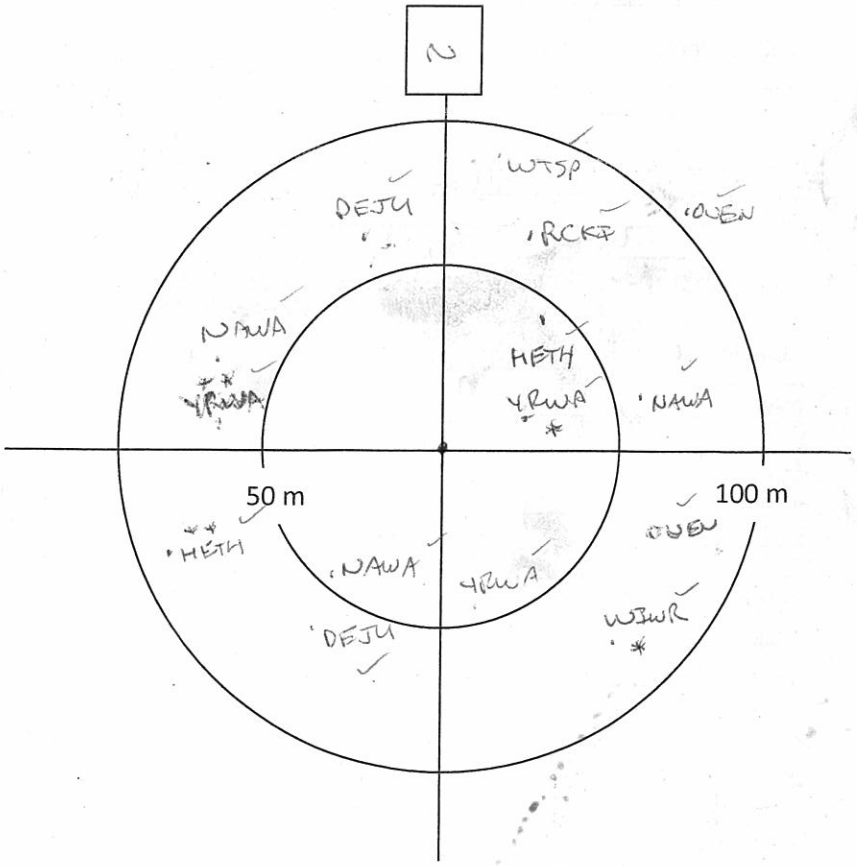

Notes/Incidental observations:

Project Number: IMG
Survey Date: JUN 2/2013

amec
AMEC Earth & Environmental
160 Traders Blvd East, Mississauga, ON L4Z 3K7
Tel: (905) 568-2929
Cell: (416) 459-6228
Fax: (905) 568-1686

Point Count Name: B41
UTM:
Start Time 6:00 - 6:10 ← ABUNDANT
Habitat: Sb 90% RHO GROE, SCH. MOSS, GAUHISP
Am Bw 10% KALANG. WETLAND

Species	<50m			<100m			>100m		
	3min	5min	10min	3min	5min	10min	3 min	5min	10min
GCKI	11								
RCKI				1					
MAWA						1			
OVEN				1					
WIWR					1				
NAWA						1			
CORA							1		
YRWA					1				

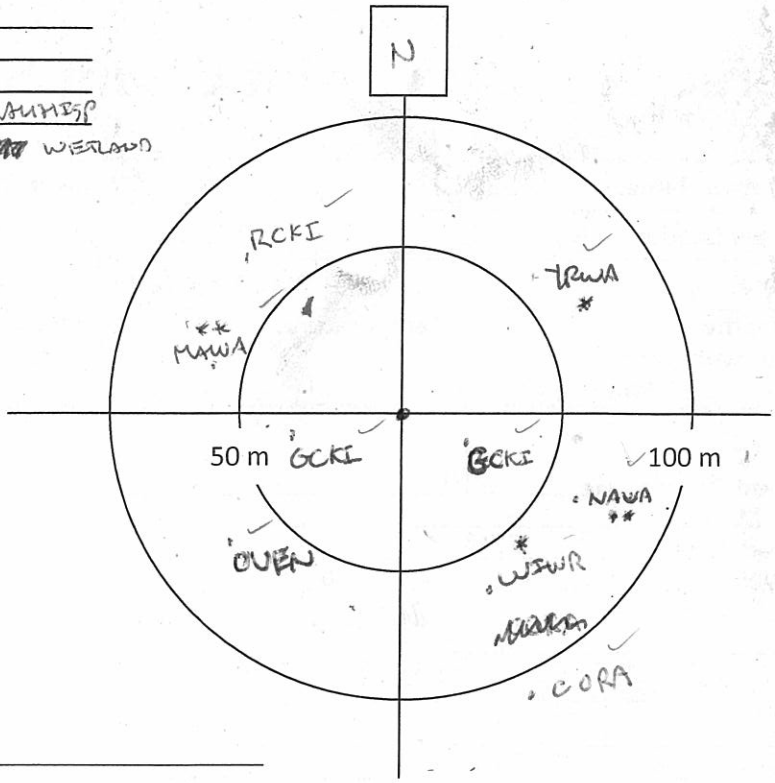

Notes/Incidental observations:

Point Count Name: B42
UTM:
Start Time 6:24 - 6:34
Habitat: Sb 70% Bf 10% Bw 20% SCH. MOSS
NOT WETLAND CORCANA

Species	<50m			<100m			>100m		
	3min	5min	10min	3min	5min	10min	3 min	5min	10min
MAWA				11		1			
BLBW	1								
RBNU					1				
NOPA			1						
GCKI		1							
BTBW			1	11					
YRWA	1								
DOWO					1				
HETH				1					

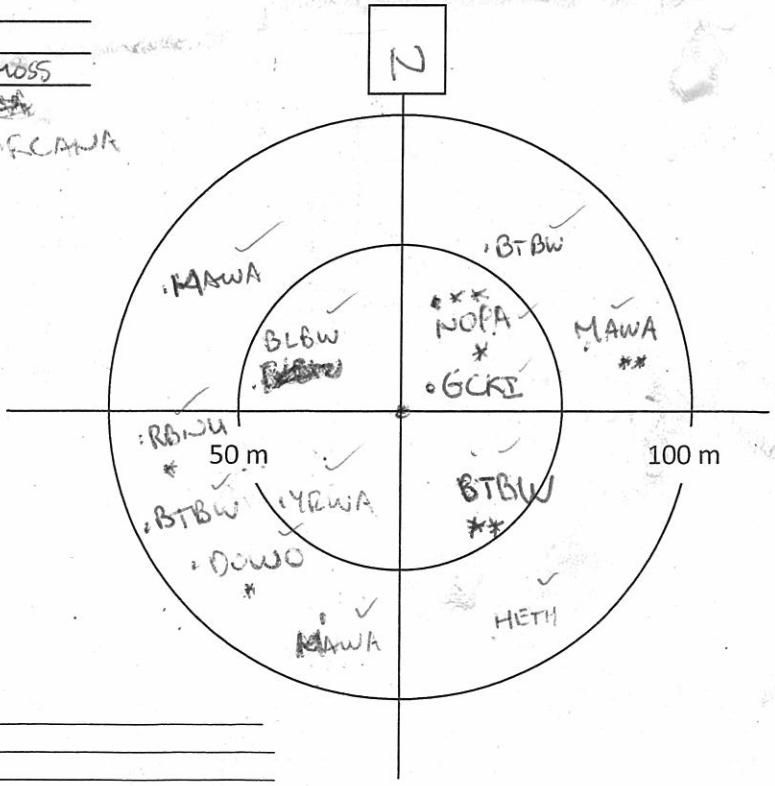

Notes/Incidental observations:

Project Number: IMG
Survey Date: JUN 2/2013

AMEC Earth & Environmental
160 Traders Blvd East, Mississauga, ON L4Z 3K7
Tel: (905) 568-2929
Cell: (416) 459-6228
Fax: (905) 568-1686

Point Count Name: B43
UTM:
Start Time 6:47 - 6:57
Habitat: CEDAR SWAMP Bw 10% SPHAGNUM
LOW VEG. DIV. Sb 10% Bf 10%

Species	<50m			<100m			>100m		
	3min	5min	10min	3min	5min	10min	3 min	5min	10min
YRWA			1						
RCKI					1				
BLJA						1			
CORA							1		
WIWR				1					
PIWO								1	

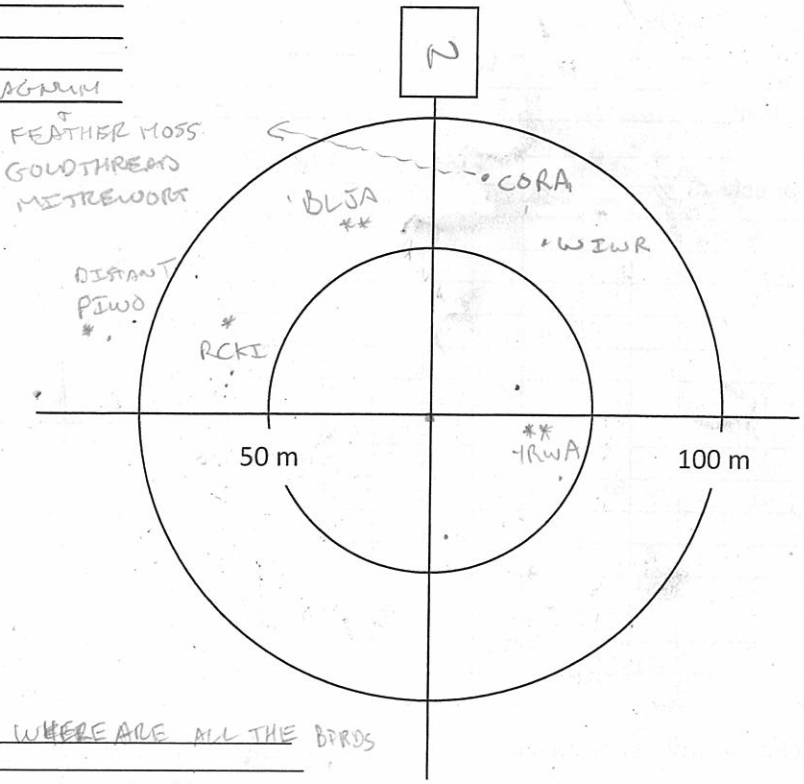

Notes/Incidental observations: ODDLY QUIET!! WHERE ARE ALL THE BIRDS

Point Count Name: B39
UTM:
Start Time 7:13-7:23
Habitat: CON. FOREST - Sb 80% Ce 10% Bw 10%
VEG SPARSE, FEATHERMOSS, NOT WETLAND

Species	<50m			<100m			>100m		
	3min	5min	10min	3min	5min	10min	3 min	5min	10min
YRWA	1			1		1			
OVEN				1		1			
BHVI				1					
CORA				1					
NOFL						1			
PIWO							1		
WTSP				1					
RCKI					1				
GRJA				1					

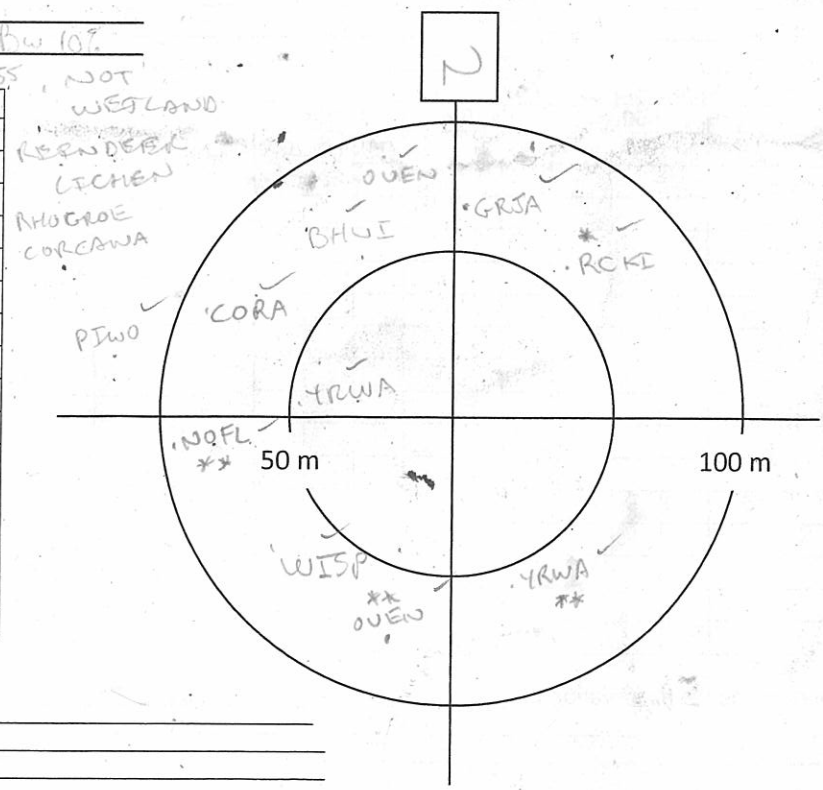

Notes/Incidental observations:

Project Number: IMG
Survey Date: JUN 21 2013

AMEC Earth & Environmental
160 Traders Blvd East, Mississauga, ON L4Z 3K7
Tel: (905) 568-2929
Cell: (416) 459-6228
Fax: (905) 568-1686

Point Count Name: B35
UTM: _____
Start Time 7:34 - 7:44
Habitat: TRANSITION - PA REGEN (YOUNG) + Sb/Ta WETLAND RHOGROE GLYCERIA CARTRES

Species	<50m			<100m			>100m		
	3min	5min	10min	3min	5min	10min	3 min	5min	10min
MAWA			1						
OVEN	1								
SWTH	1								
YRWA			1	1					
WIWR				1					
HETH				1	1				
WTSP					1				
NOFL				1					
RUGR				1					

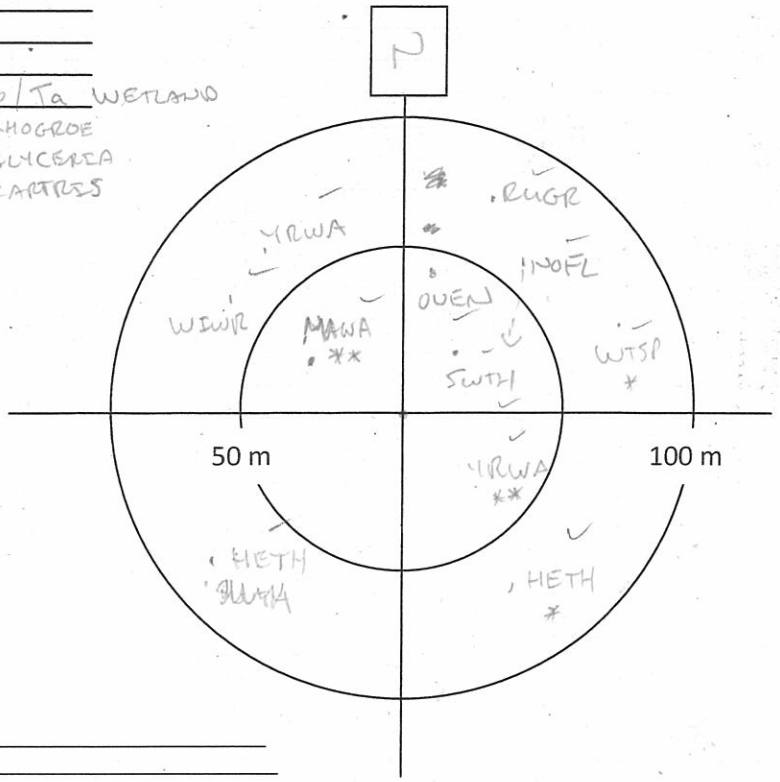

Notes/Incidental observations: _____

Point Count Name: B38
UTM: _____
Start Time 7:56 - 8:06
Habitat: TRANSITION - Sw Sb Pj B... REGEN FOREST CON. WETLAND Sb Ce Ta & GLYCANA R.O. DOGWOOD (R) ALDER } ALL CUT + REGEN.

Species	<50m			<100m			>100m		
	3min	5min	10min	3min	5min	10min	3 min	5min	10min
BHVI	1								
MAWA	1								
RCKI				1					
YRWA				1		11			
NAWA				1					
RUGR				1					
OVEN									1
REVI						1			
RCKI									1

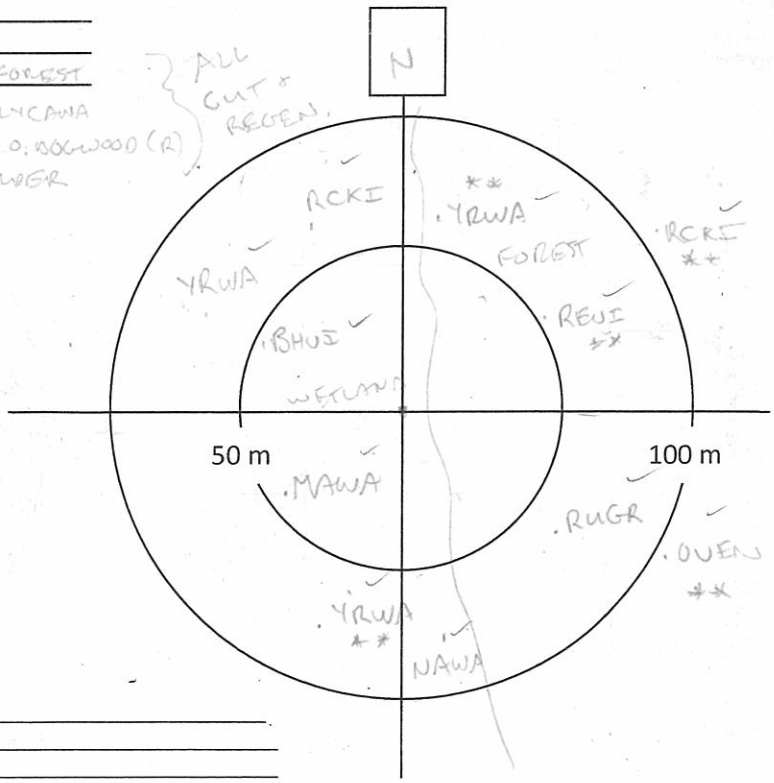

Notes/Incidental observations: _____

Project Number: IMG
Survey Date: JUNE 2/2013

AMEC Earth & Environmental
160 Traders Blvd East, Mississauga, ON L4Z 3K7
Tel: (905) 568-2929
Cell: (416) 459-6228
Fax: (905) 568-1686

Point Count Name: B34
UTM:
Start Time 8:17 - 8:27
Habitat: Sb REGEN FOREST BW RARE SPARSE VEG

Species	<50m			<100m			>100m		
	3min	5min	10min	3min	5min	10min	3 min	5min	10min
MAWA	1					1			
SWTH	1								
YRWA	1								
BCCH		1			1				
NAWA		1							
WIWR				1					
RUGR				1					
HETH				1					
AMCR									1

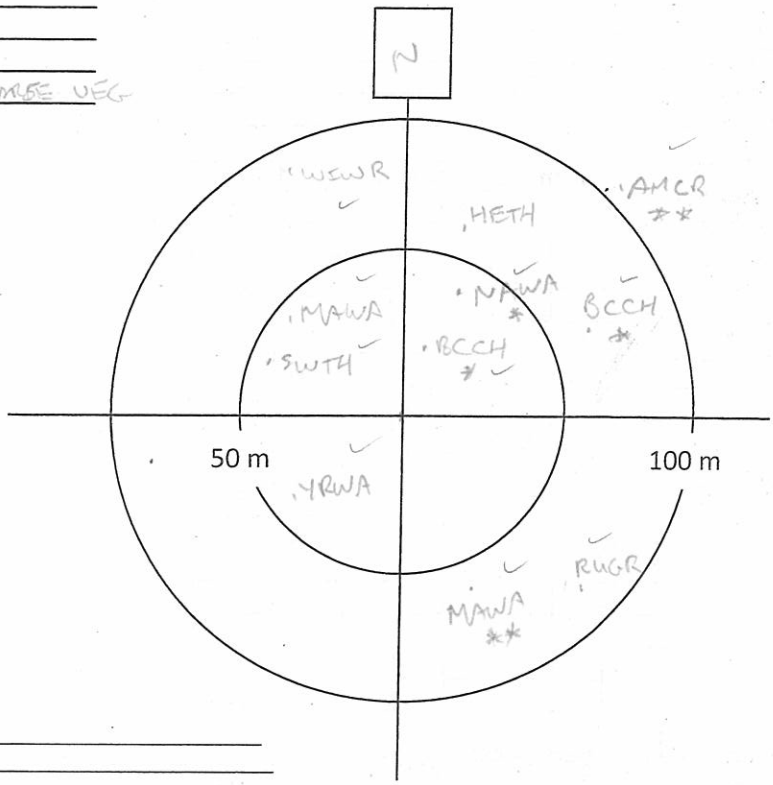

Notes/Incidental observations:

Point Count Name:
UTM:
Start Time
Habitat:

Species	<50m			<100m			>100m		
	3min	5min	10min	3min	5min	10min	3 min	5min	10min

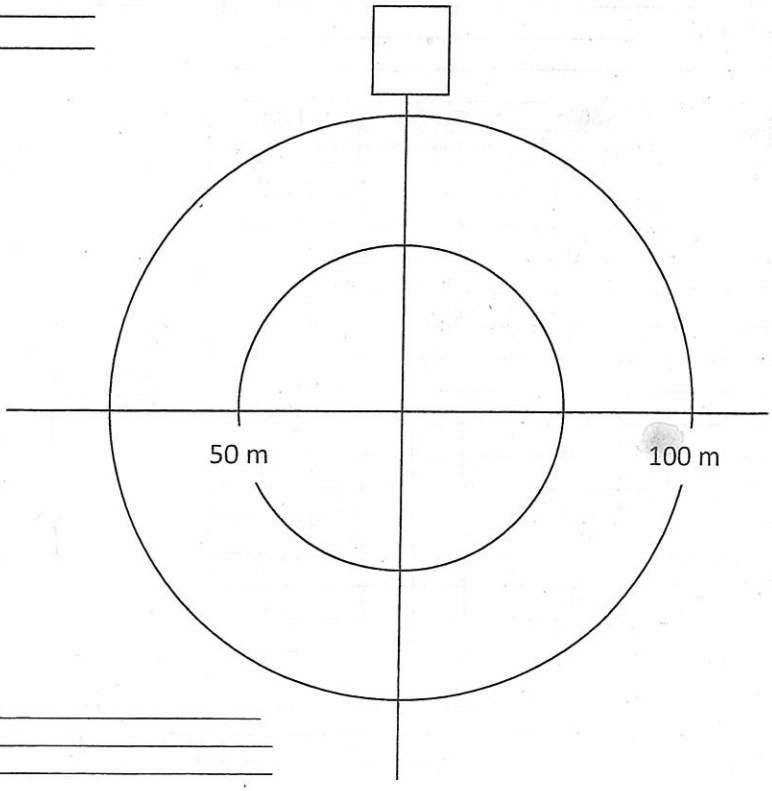

Notes/Incidental observations:

AMEC Earth & Environmental
160 Traders Blvd East, Mississauga, ON L4Z 3K7
Tel: (905) 568-2929
Cell: (416) 459-6228
Fax: (905) 568-1686

Breeding Bird Point Count Survey

Project Name: IAMGOLD		**Project Number:** TC121522	
Crew Leader:	**Observers:** Jon Pleizier		
Date: June 3, 2013	**Start Time (24hr):** 05:25	**End Time (24hr):** 07:10	
Weather: 90% cloud.	**Temperature:** 4°C	**Wind:** 3	**Precipitation (Circle):** 0 None, 1 Haze/Fog, 2 Drizzle, 3 Rain

Point Count Name: BB10
UTM: 073-17U 465730; 5353801
Start Time 05:32
Habitat: Jack Pine - upland feathermoss, blueberry, bunchberry (spruce, moist feathermoss, labrador tea (ES11)

Species	<50m			<100m			>100m		
	3min	5min	10min	3min	5min	10min	3 min	5min	10min
HETH				1					
CORA							1		
NAWA	1								
RCKI	1								
WTSP				1					
OVEN							1		
RUGR							1		
DEJU		1							
GCKI			1						

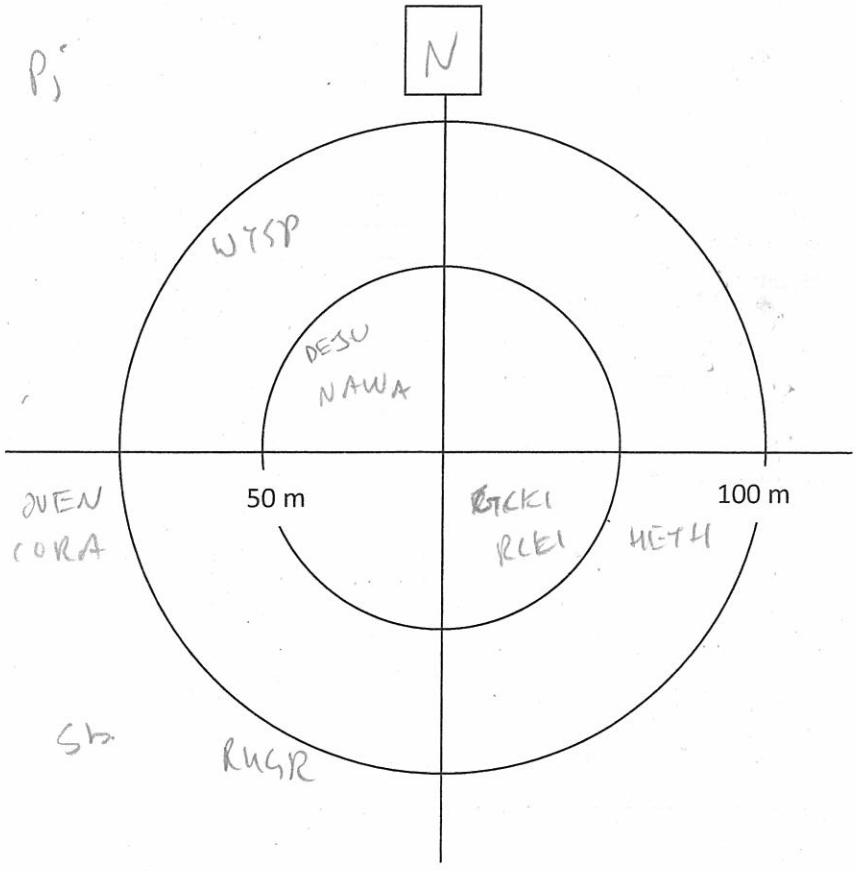

Notes/Incidental observations: RESQ

Project Number: TCR1522
Survey Date: June 3, 2013

AMEC Earth & Environmental
160 Traders Blvd East, Mississauga, ON L4Z 3K7
Tel: (905) 568-2929
Cell: (416) 459-6228
Fax: (905) 568-1686

Point Count Name: BB11
UTM: 075, 17U 465911, 5353938
Start Time 05:55
Habitat: Black spruce dominated - very patchy no ecosite

Species	<50m			<100m			>100m		
	3min	5min	10min	3min	5min	10min	3 min	5min	10min
NAWA	1			1					
OVEN				1					
REVI				1					
RCKI					1				
RUGR					1				
YRWA						1			

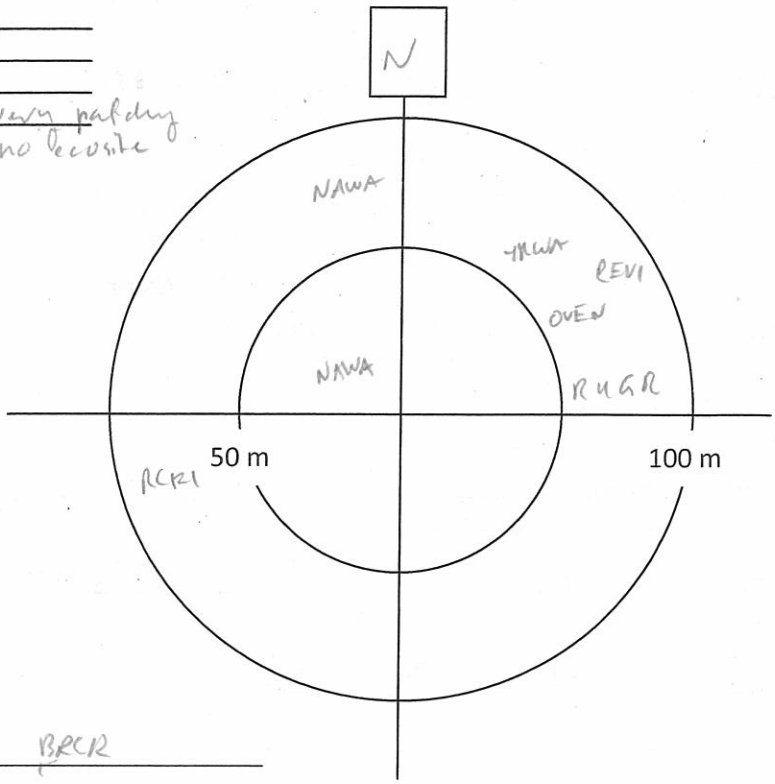

Notes/Incidental observations: en route NAWA BRCR

Point Count Name: BB13
UTM: 075, 17U 460769, 5383866.
Start Time 06:23
Habitat: ES2 (Jack Pine - sandy soil) 1 Muskeg.

PJ

Species	<50m			<100m			>100m		
	3min	5min	10min	3min	5min	10min	3 min	5min	10min
SWSP				1					1
RCKI				1				1	
YRWA	11								
PAWA						1			

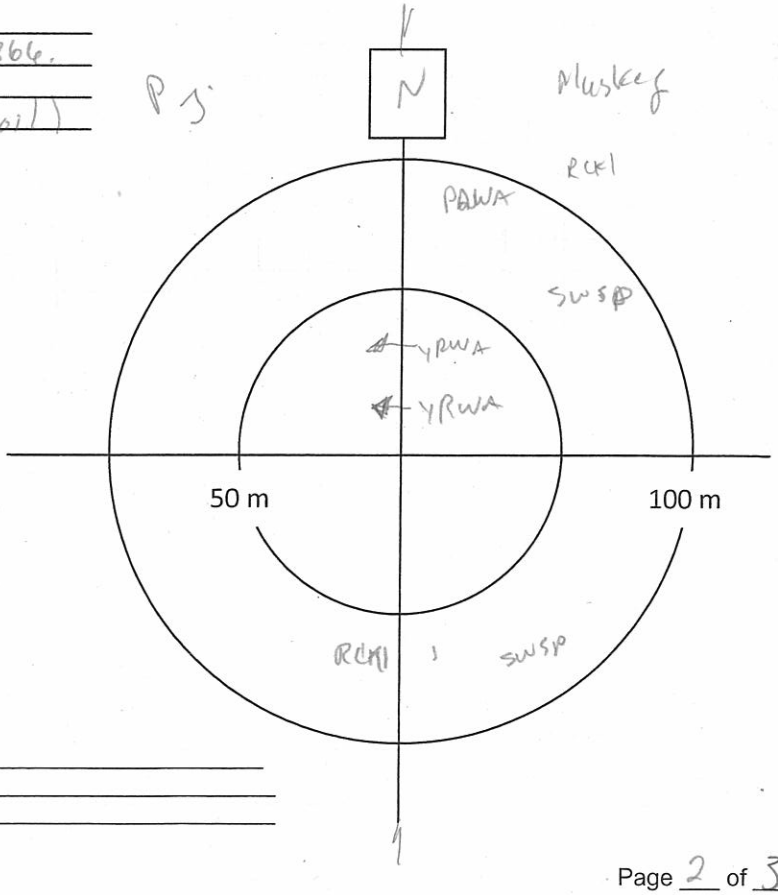

Notes/Incidental observations: SAPE

Project Number: TC121522
Survey Date: June 3, 2013

AMEC Earth & Environmental
160 Traders Blvd East, Mississauga, ON L4Z 3K7
Tel: (905) 568-2929
Cell: (416) 459-6228
Fax: (905) 568-1686

Point Count Name: ~~[illegible]~~ BB14
UTM: Ø76 466317, 5354179
Start Time 06:43
Habitat: - Muskeg 5 open water - larch
- Pi - EB2

Species	<50m			<100m			>100m		
	3min	5min	10min	3min	5min	10min	3 min	5min	10min
BUFF				11					
COYE	1					1			
DCKI	1								
PAWA				1					
HOME				1					
CORA									1
OVEN						1			
SWSP			1						
AMGO									
MOWA						1			
MAWA						1			

FO

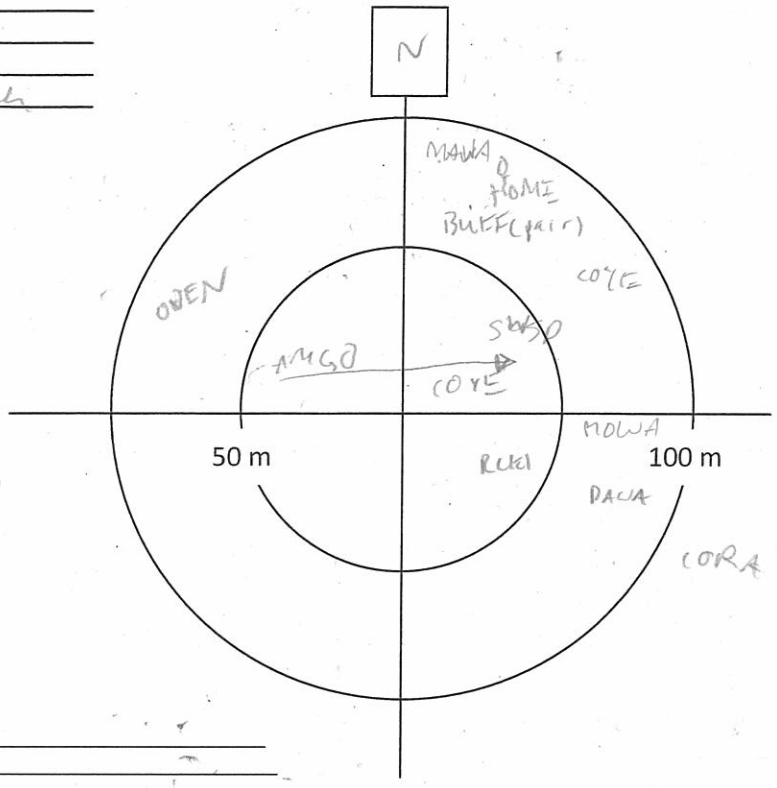

Notes/Incidental observations:

Point Count Name:
UTM:
Start Time
Habitat:

Species	<50m			<100m			>100m		
	3min	5min	10min	3min	5min	10min	3 min	5min	10min

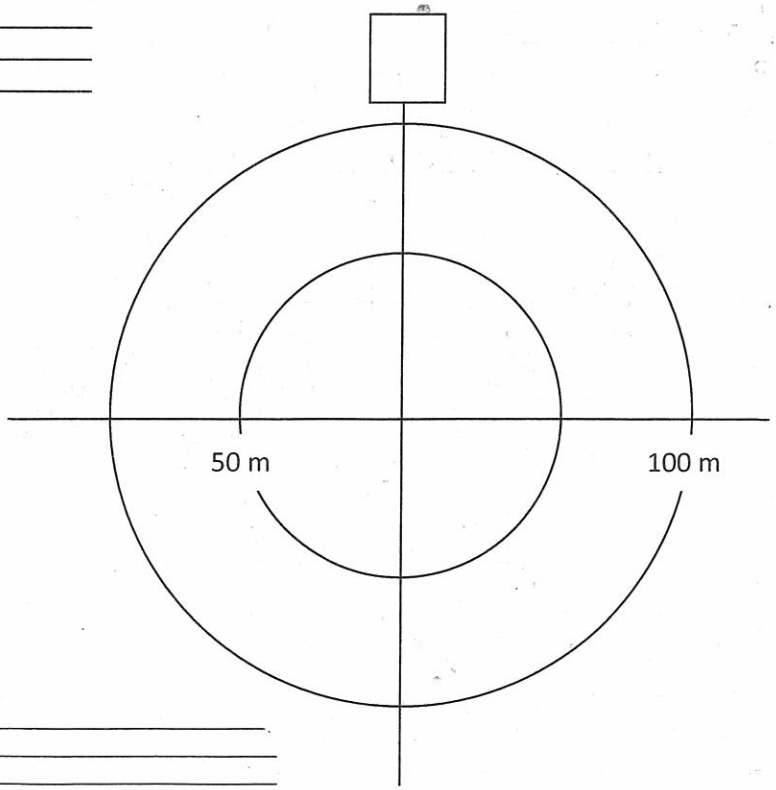

Notes/Incidental observations:

AMEC Earth & Environmental
160 Traders Blvd East, Mississauga, ON L4Z 3K7
Tel: (905) 568-2929
Cell: (416) 459-6228
Fax: (905) 568-1686

Breeding Bird Point Count Survey

Project Name: IMG		Project Number: TC121522	
Crew Leader: J. BAUSDON		Observers: J. BAUSDON	
Date: JUNE 3/2013	Start Time (24hr): 5:30 am		End Time (24hr): 6:39 am
Weather: OVERCAST	Temperature: 4°C	Wind: 1-2	Precipitation (Circle): 0 None, 1 Haze/Fog, 2 Drizzle, 3 Rain

Point Count Name: B5
UTM:
Start Time 5:30 - 5:40
Habitat: Pj PLANTATION (5-6m HGT)
SOME Bw ABAL-SP PRUSERO
CAULPROL CORCANA BRACKEN VACANGU
EPIREPE PICHARI ABIBALS At

Species	<50m			<100m			>100m		
	3 min	5 min	10 min	3 min	5 min	10 min	3 min	5 min	10 min
WTSP	1			11					
CORA							1		
NAWA					1				
MAWA				1					
YRWA					1				
OVEN				1		1			

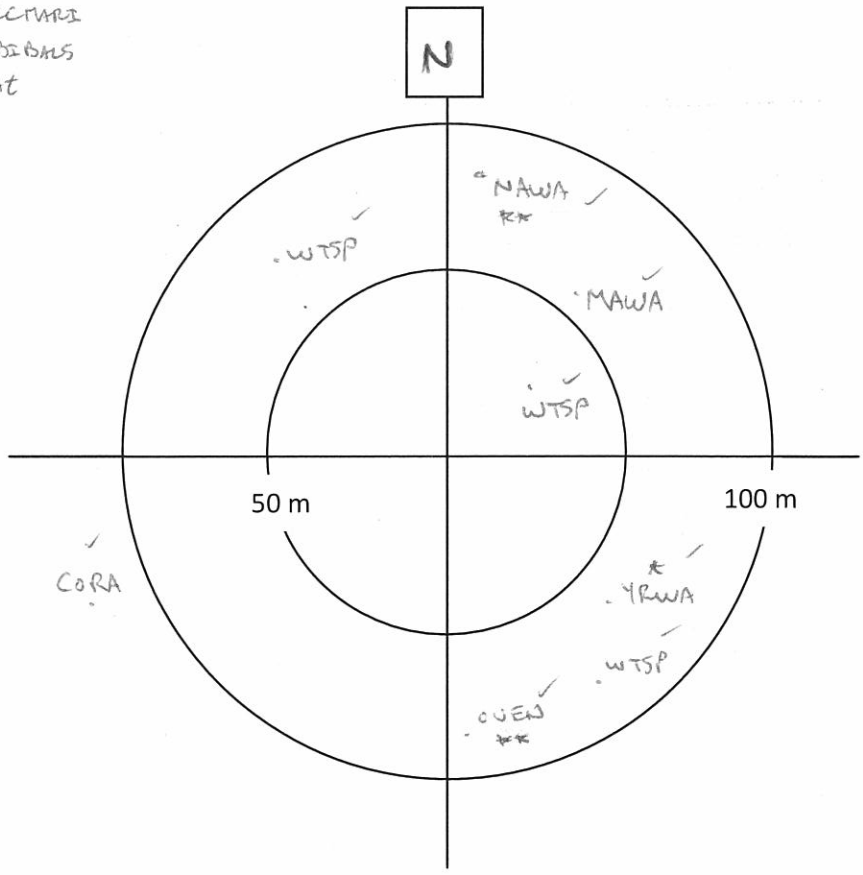

Notes/Incidental observations:

Project Number: TC121522
Survey Date: JUNE 3/2013

AMEC Earth & Environmental
160 Traders Blvd East, Mississauga, ON L4Z 3K7
Tel: (905) 568-2929
Cell: (416) 459-6228
Fax: (905) 568-1686

Point Count Name: B6
UTM:
Start Time 5:46 - 5:56
Habitat: SAME AS B5

Species	<50m			<100m			>100m		
	3min	5min	10min	3min	5min	10min	3min	5min	10min
OVEN				11	1				
NOFL				1					
YRWA				1					
NAWA				1					
RUGR						1			
AMKE					1				

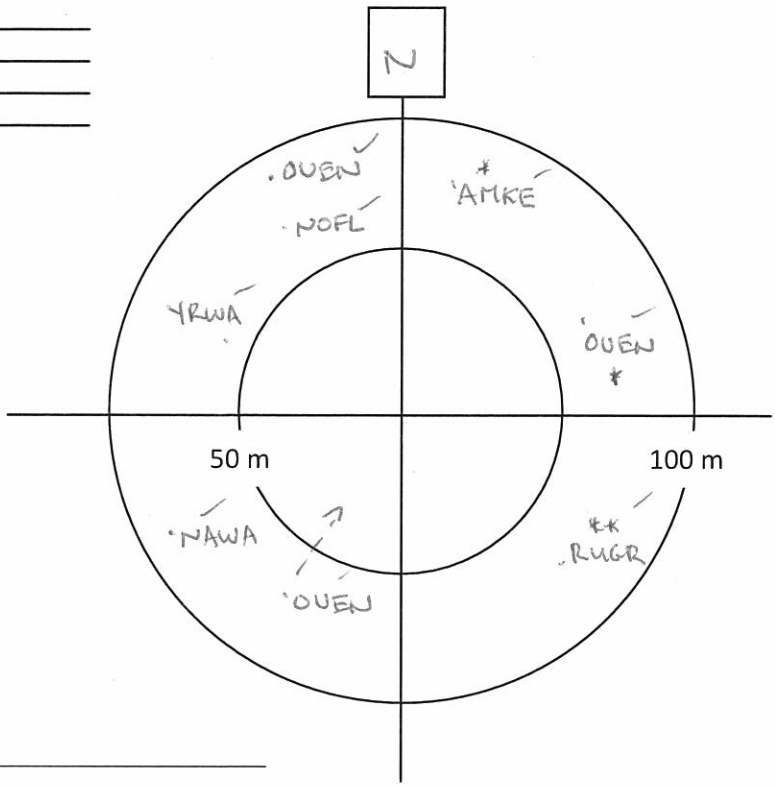

Notes/Incidental observations:

Point Count Name: B7
UTM:
Start Time 6:03 - 6:13
Habitat: SAME AS B5

Species	<50m			<100m			>100m		
	3min	5min	10min	3min	5min	10min	3min	5min	10min
WTSP				1	1				
OVEN				1		1			
NAWA				1					
YRWA	1			1					
AMCR				1					
RUGR					1				

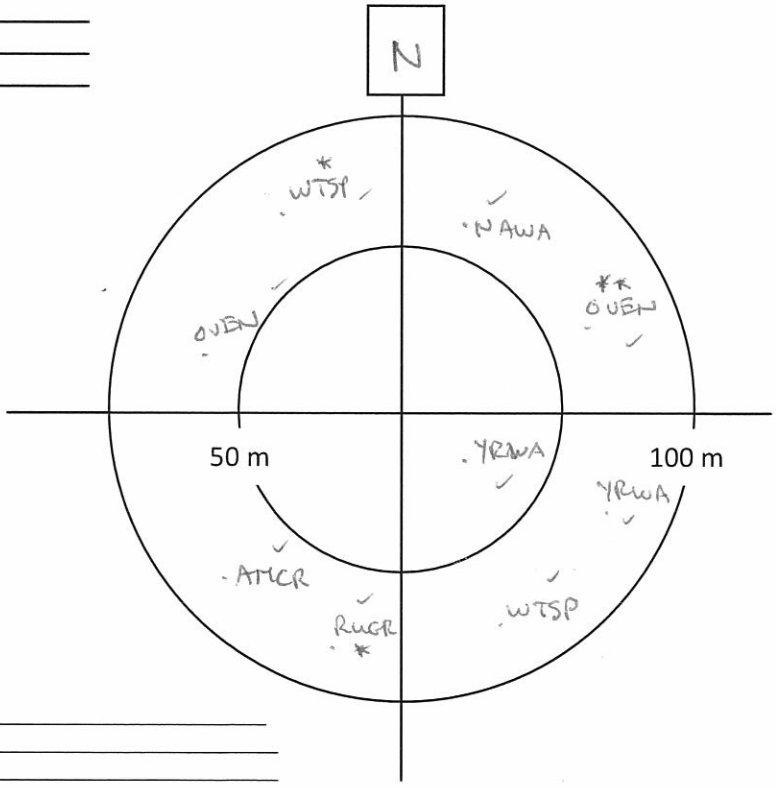

Notes/Incidental observations:

Project Number: TC121522
Survey Date: JUNE 3/2013

AMEC Earth & Environmental
160 Traders Blvd East, Mississauga, ON L4Z 3K7
Tel: (905) 568-2929
Cell: (416) 459-6228
Fax: (905) 568-1686

PointCountName: B8
UTM:
StartTime 6:29 - 6:39
Habitat:

Species	<50m			<100m			>100m		
	3min	5min	10min	3min	5min	10min	3min	5min	10min
WTSP				1					
YRWA	1								
AMCR				1					
OVEN				11					
CORA						1			
RUGR				1					
PIWO							1		
RBGH	→ FLY-OVER								

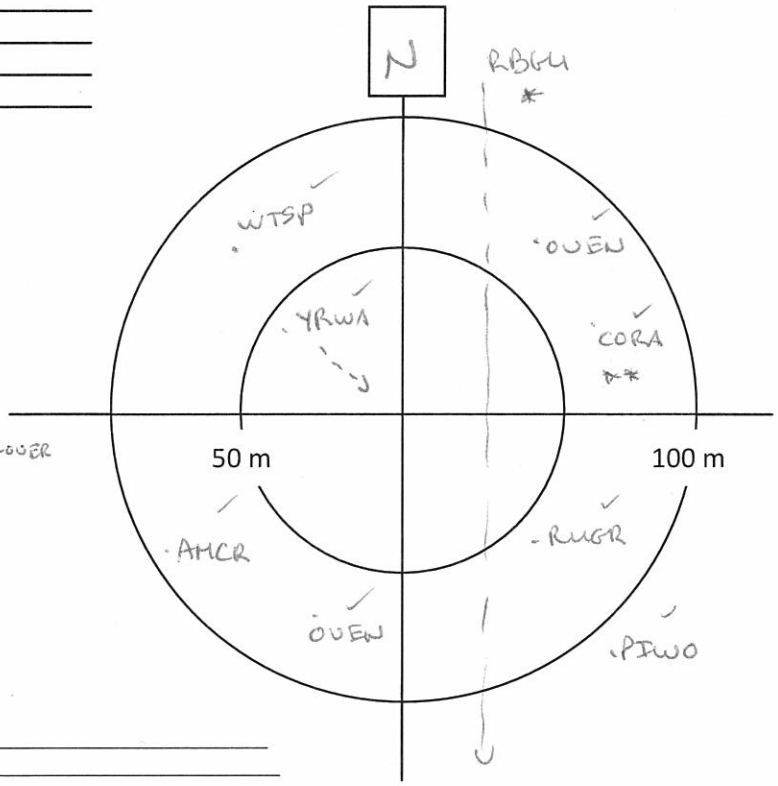

Notes/Incidental observations:

PointCountName:
UTM:
StartTime
Habitat:

Species	<50m			<100m			>100m		
	3min	5min	10min	3min	5min	10min	3min	5min	10min

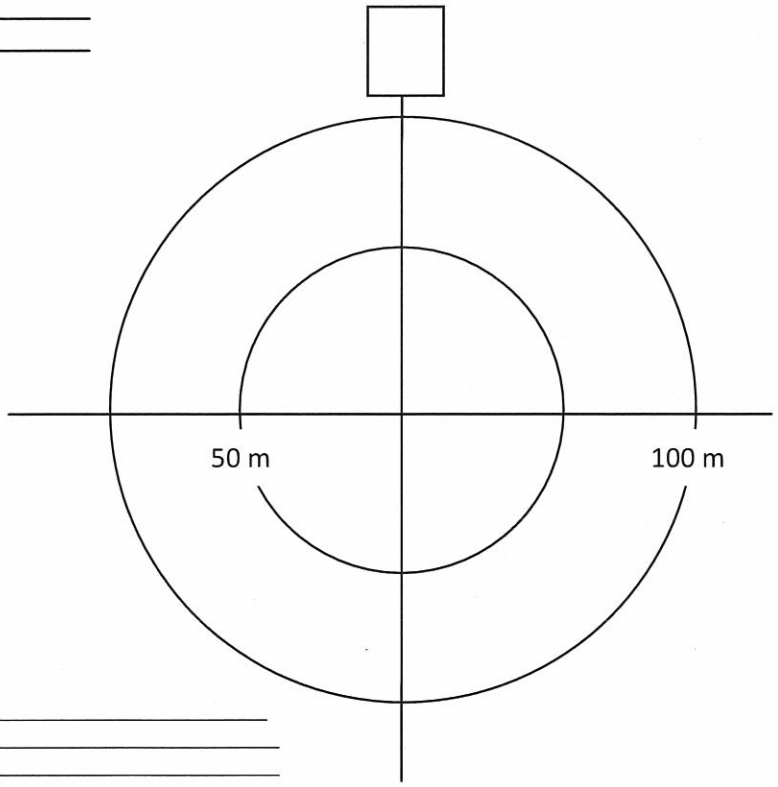

Notes/Incidental observations:

Jon Pleasier

Wind 2-3, Cloud 10%, Rain-0

Project Number: TC121522
Survey Date: June 4, 2012

AMEC Earth & Environmental
160 Traders Blvd East, Mississauga, ON L4Z 3K7
Tel: (905) 568-2929
Cell: (416) 459-6228
Fax: (905) 568-1686

Point Count Name: BB54
UTM:
Start Time 05:19
Habitat: Birch (100%) - EST c - stoney soil
LQ dominant - no Aspen balsam Fir abund. Mount. maple

Species	<50m			<100m			>100m		
	3min	5min	10min	3min	5min	10min	3 min	5min	10min
HETH				1					
RUGR									
VEER	11			1	1				
OVEN				11					
BCCH				1					
RCKI					1				
BTN	1								
BTBW	1								
SWTH						1			
WIWR				1					
NOPA				1					
AMCR									
REVI			11						

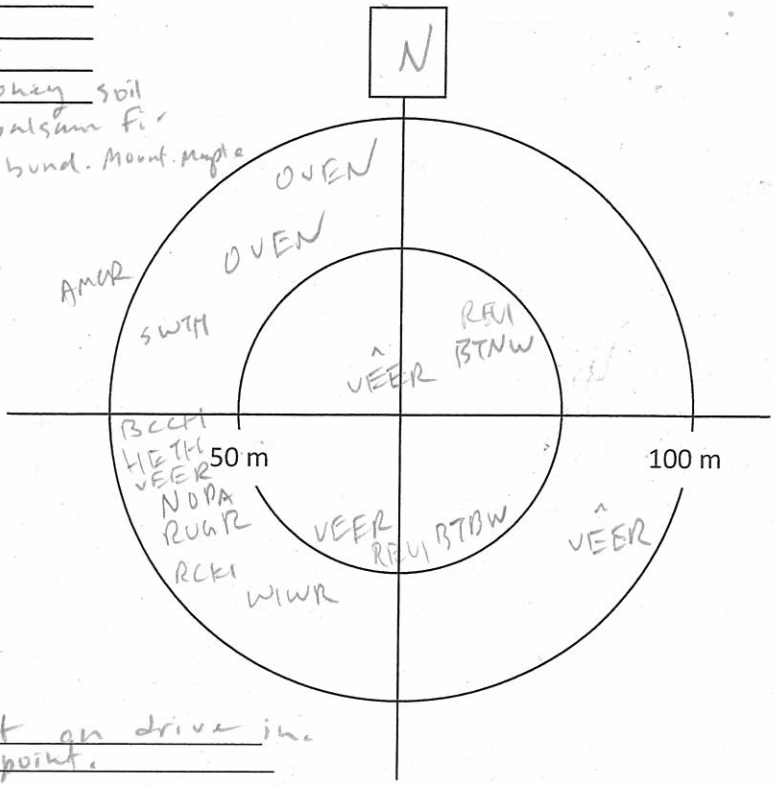

Notes/Incidental observations: Lynx or bobcat on drive in. MOWA along corridor at entry point.

Point Count Name: BB58
UTM:
Start Time 05:45
Habitat: EST c - same as prev

Species	<50m			<100m			>100m		
	3min	5min	10min	3min	5min	10min	3 min	5min	10min
REVI				11					
HETH				11					
AMCR							1		
OCKI	1								
NOPA		1		1					
OVEN	1				1				
BCCH				1					
WIWR				1					
BTNW	1								
BLBW					1				
RUGR									

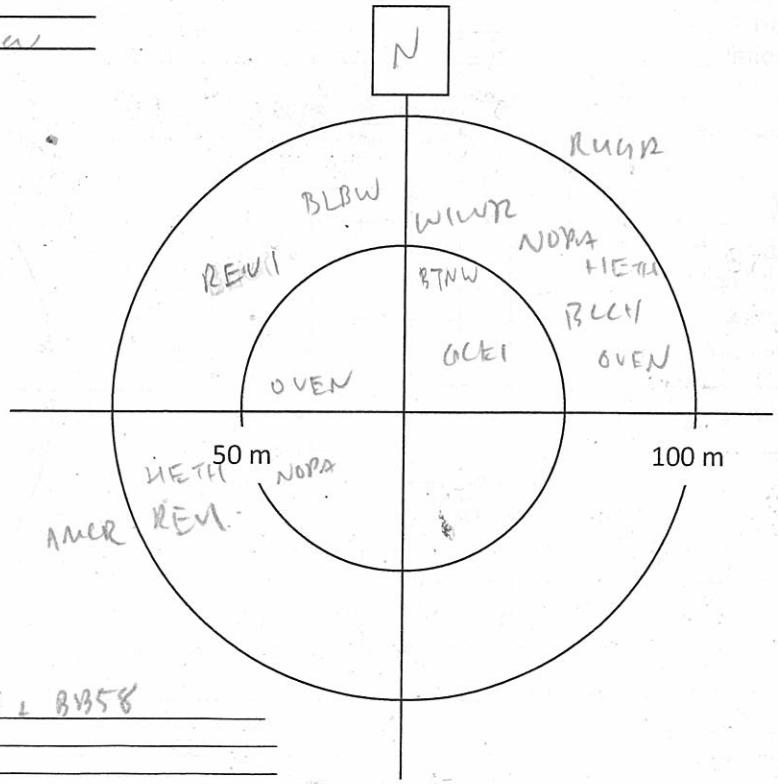

Notes/Incidental observations: enroute btw BB54 & BB58
- Four-toed salamander
- Small vernal pool (074)
- abundant downed woody debris.
- RESQ
- Few large dying Bw (079)
- PIWI holes en route.

AMEC Earth & Environmental
160 Traders Blvd East, Mississauga, ON L4Z 3K7
Tel: (905) 568-2929
Cell: (416) 459-6228
Fax: (905) 568-1686

Project Number: TC121522
Survey Date: June 4, 2013

Point Count Name: BB55
UTM: _____
Start Time 06:10
Habitat: same as prev.

Species	<50m			<100m			>100m		
	3min	5min	10min	3min	5min	10min	3 min	5min	10min
REVI	11			(1)					
RUGR				1					
UNWO	1			1					
OVEN	1			1					
RBGR				1					
BTBW	1								
WTSP				1					
SWTH					1				

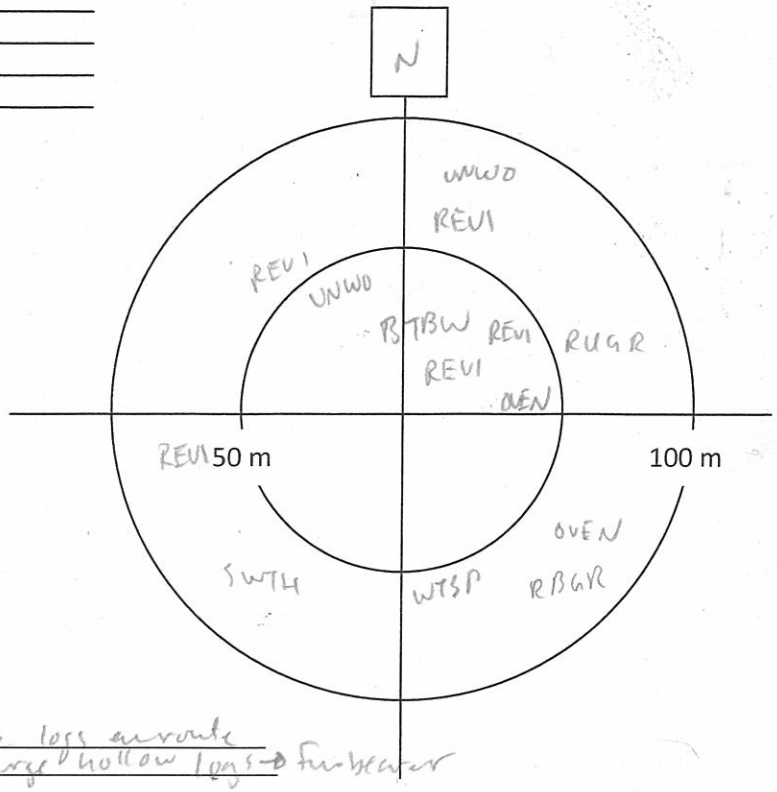

Notes/Incidental observations: Searched more logs en route → no salamanders - several large hollow logs → further deepening habitat.
- wet depression at count & few downed logs nearby.

Point Count Name: BB56
UTM: _____
Start Time 06:55
Habitat: Poplar - E57m ab. Mountain Maple sp. woodfern

Species	<50m			<100m			>100m		
	3min	5min	10min	3min	5min	10min	3 min	5min	10min
HETH	1			1					
REVI	1			1					
NAWA	1								
BTBW	1								
DOWO	1								
MAWA				1					
YBSA				1					
OVEN								1	

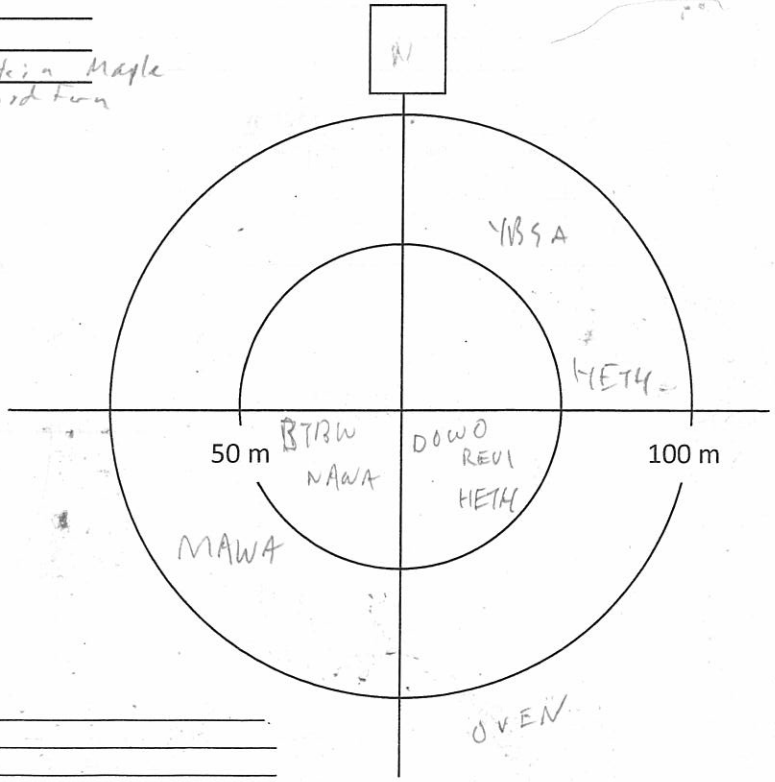

Notes/Incidental observations: _____

Project Number: TC121522
Survey Date: June 4, 2013

AMEC Earth & Environmental
160 Traders Blvd East, Mississauga, ON L4Z 3K7
Tel: (905) 568-2929
Cell: (416) 459-6228
Fax: (905) 568-1686

Point Count Name: BB57
UTM:
Start Time 07:00
Habitat: spruce dom. - ES4 / ES4

Species	<50m			<100m			>100m		
	3min	5min	10min	3min	5min	10min	3 min	5min	10min
RCKI	11								
WTSP				1				1	
OVEN				1					
BHVI				1					
DOWO				1					
NAWA	11								

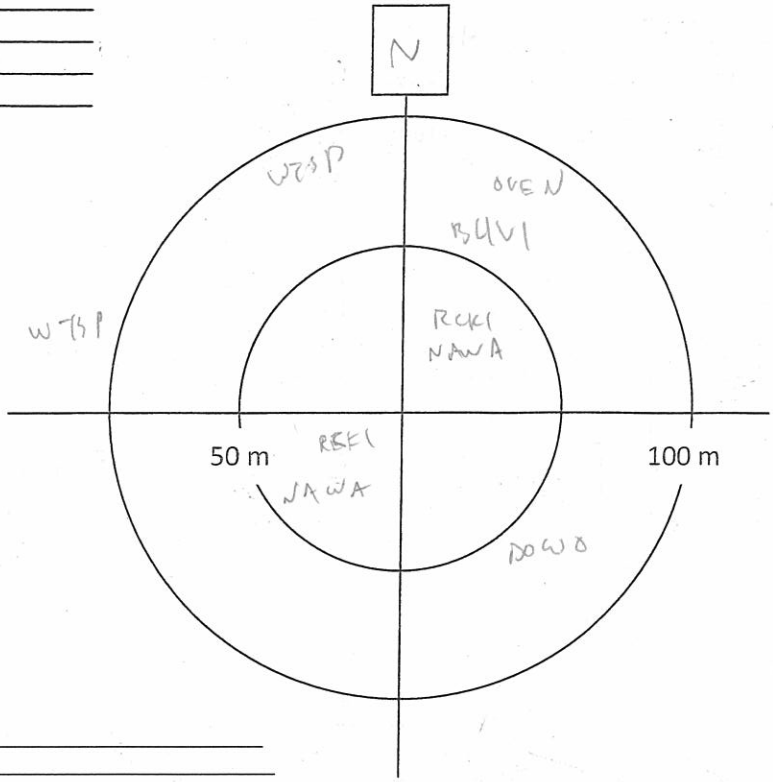

Notes/Incidental observations:

Point Count Name: BB52
UTM:
Start Time 07:21
Habitat: Birch dom-

Species	<50m			<100m			>100m		
	3min	5min	10min	3min	5min	10min	3 min	5min	10min
LEFL	1			1					
WTSP	1								
RCKI	1				1				
NAWA	1			1					
HETH	1							1	
MAWA		11			1				
RUGR						1			
TEWA						1			

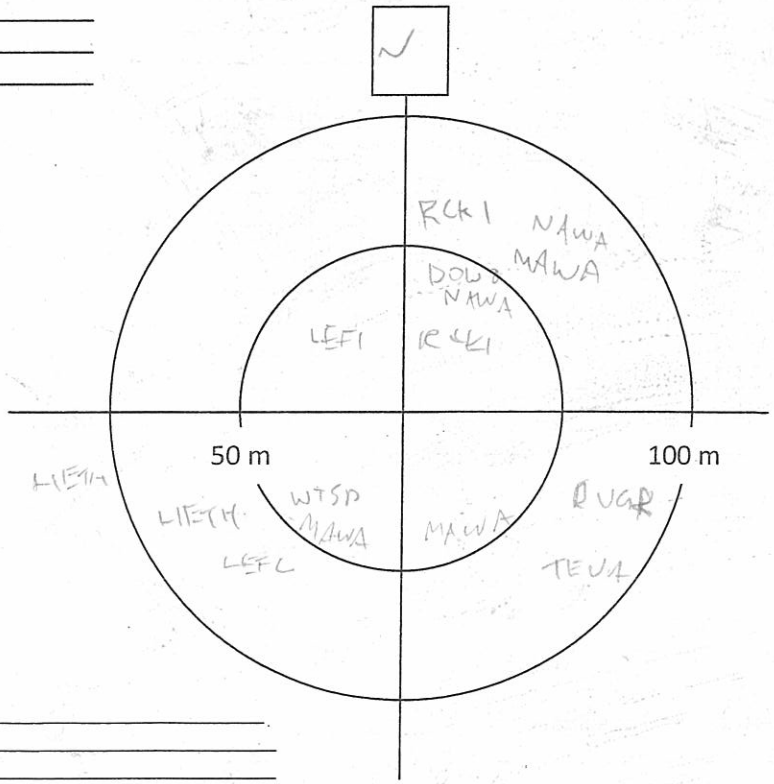

Notes/Incidental observations:
N. Birch dom - ash, Alder, Balsam
- mud feather moss
- wet
- clubmosses

Project Number: TL121522
Survey Date: June 4, 2013

AMEC Earth & Environmental
160 Traders Blvd East, Mississauga, ON L4Z 3K7
Tel: (905) 568-2929
Cell: (416) 459-6228
Fax: (905) 568-1686

Point Count Name: BB49
UTM:
Start Time 07:41
Habitat: Sb dom - BW, Pj, Pt - ES6c

Species	<50m			<100m			>100m		
	3min	5min	10min	3min	5min	10min	3 min	5min	10min
NAWA	1			1					
MAWA	1								
OVEN				1					
RCKI	1				1				
HETH				1					
~~BHVI~~									

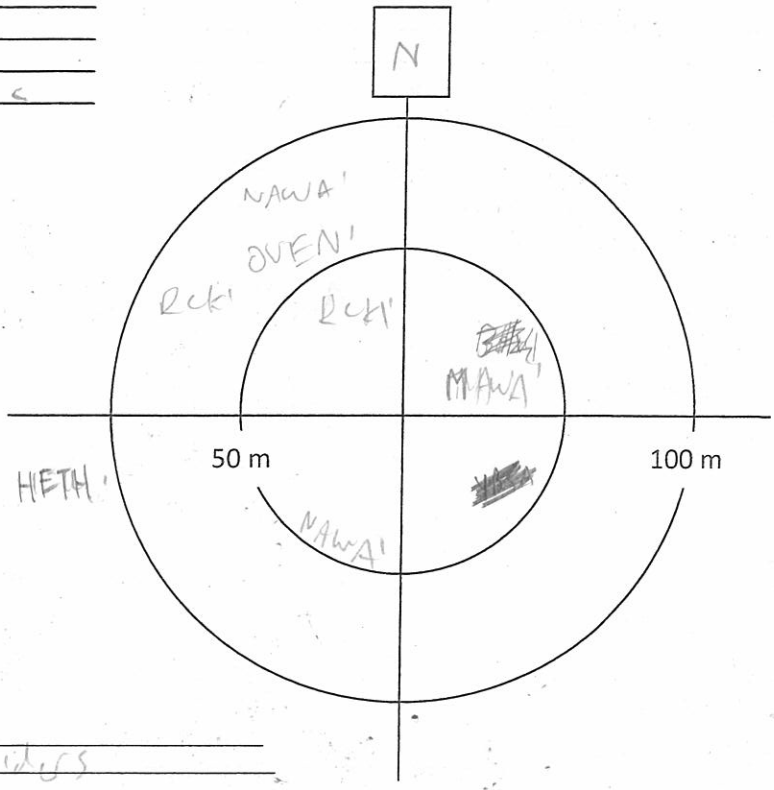

Notes/Incidental observations:
- Very rocky ground - small boulders

Point Count Name: BB48
UTM:
Start Time 08:05
Habitat: / Brush & Alder

Species	<50m			<100m			>100m		
	3min	5min	10min	3min	5min	10min	3 min	5min	10min
NAWA				1	1		1		
MAWA	1	1							
YRWA	1								
RCKI	1			1					
WTSP				1				1	
BHVI			1						
YBFL	11								
OVEN				1					

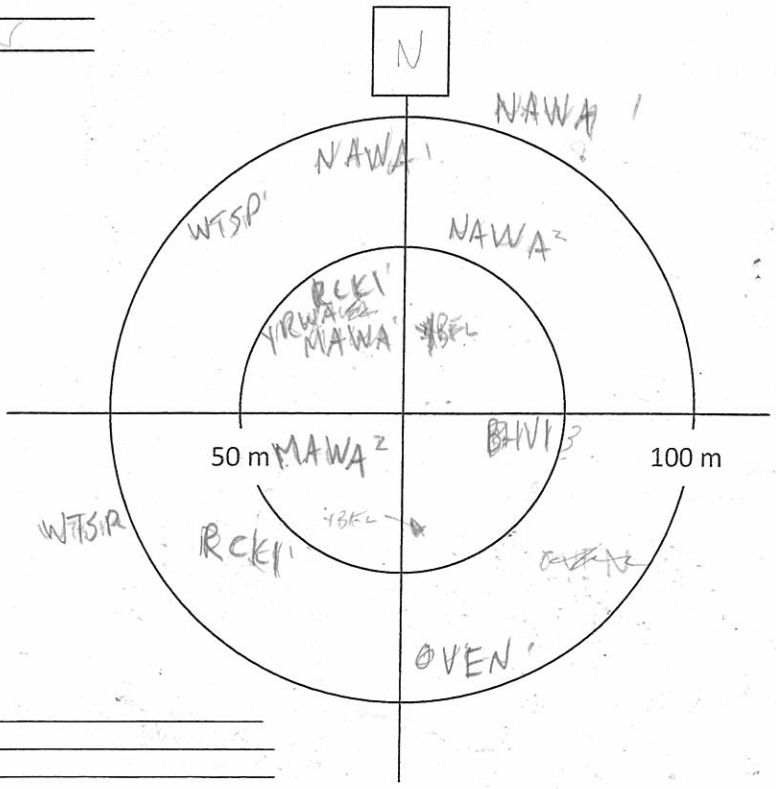

Notes/Incidental observations: RESQ

Project Number: TC121522
Survey Date: June 4, 2013

AMEC Earth & Environmental
160 Traders Blvd East, Mississauga, ON L4Z 3K7
Tel: (905) 568-2929
Cell: (416) 459-6228
Fax: (905) 568-1686

Point Count Name: BB45
UTM:
Start Time 08:45
Habitat: Muskeg + Black Spruce dom (ES-11)

Species	<50m			<100m			>100m		
	3min	5min	10min	3min	5min	10min	3 min	5min	10min
RCKI				1					
WTSP				1					
OCWA	1								
SWSP				1					
REVI							1		
AMCR							1		
OVEN							1		
BLJA					1				

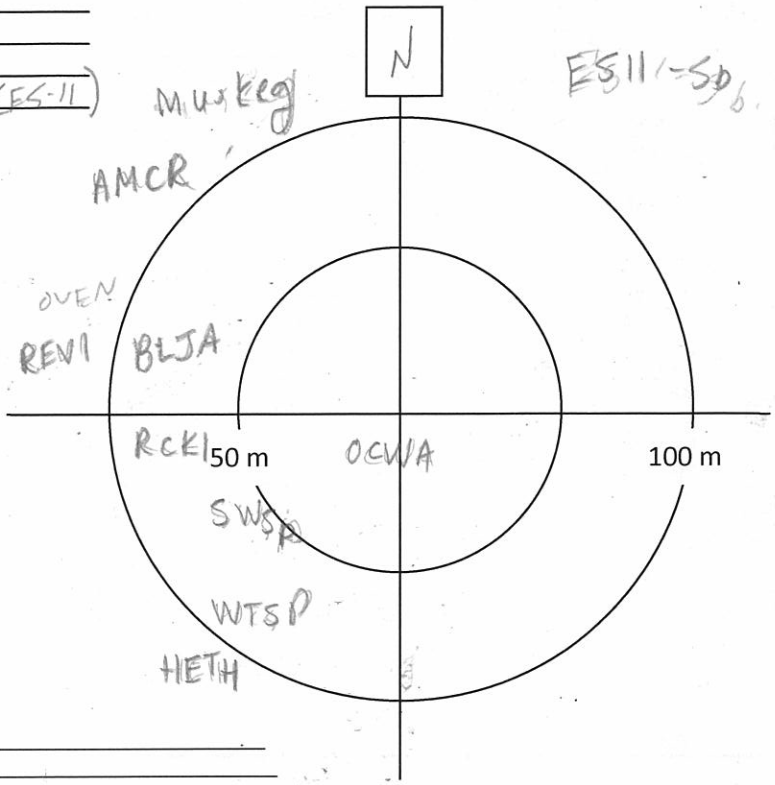

Notes/Incidental observations:

Point Count Name: BB1
UTM:
Start Time 10:07
Habitat: Poplar dom.

Species	<50m			<100m			>100m		
	3min	5min	10min	3min	5min	10min	3 min	5min	10min
REVI				1					
NAWA				1					
OVEN	11								
RCKI	1								
REVI					1				
RUGR								1	
YBSA			1						

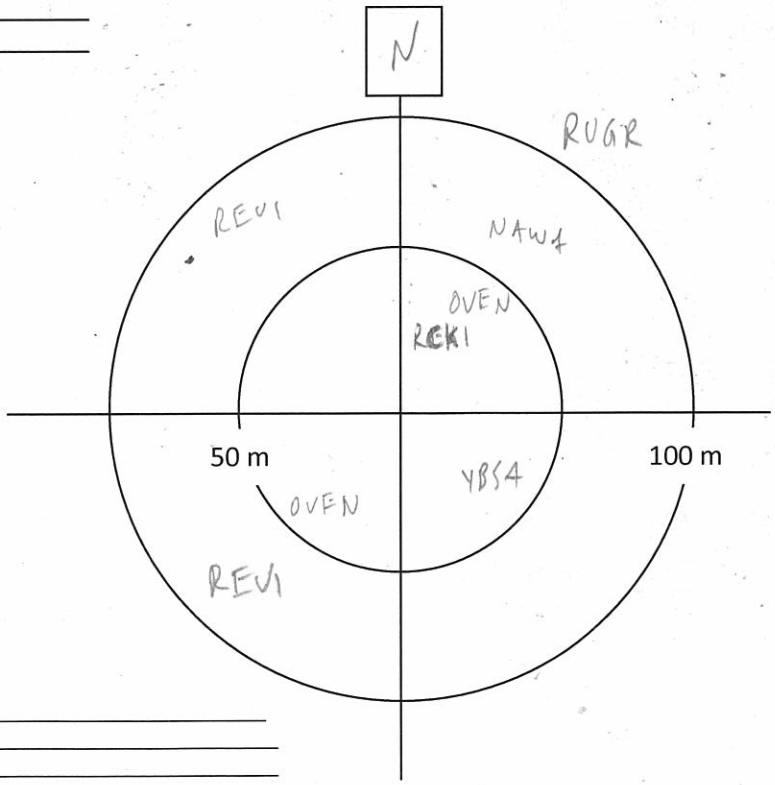

Notes/Incidental observations: RESQ

AMEC Earth & Environmental
160 Traders Blvd East, Mississauga, ON L4Z 3K7
Tel: (905) 568-2929
Cell: (416) 459-6228
Fax: (905) 568-1686

Breeding Bird Point Count Survey

Project Name: IMG		**Project Number:** TC121522	
Crew Leader: JEFF BALSDON	**Observers:** J. BALSDON		
Date: JUNE 4/2013	**Start Time (24hr):** 5:05 am	**End Time (24hr):** 0555	
Weather: CLEAR	**Temperature:** 5°C	**Wind:** 1-2	**Precipitation (Circle):** (0) None 1 Haze/Fog 2 Drizzle 3 Rain

Point Count Name: B36
UTM: _____
Start Time 5:05 -5:15
Habitat: MIXED Bw 60 At 10 Sw 10 S-L 10 Bf 10
YOUNG CONIF. REGEN ABUNDANT

Species	<50m			<100m			>100m		
	3min	5min	10min	3min	5min	10min	3 min	5min	10min
OVEN				III					
REVI				I					
RBNU				I	I				
AMRO					I				
MAWA	II								
NOPA	I								
YRWA	II								
BTNW						I			
RUGR				I					
YBSA			I						
NAWA						I			
*									

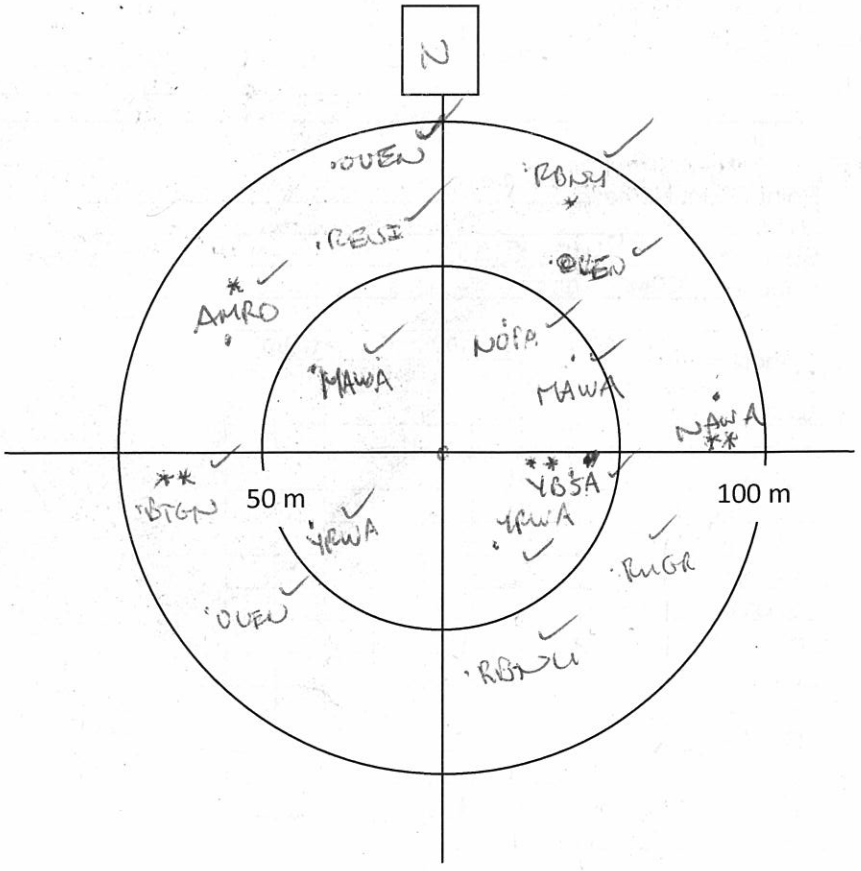

Notes/Incidental observations: _____

Project Number: TC121522
Survey Date: JUNE 4/2013

AMEC Earth & Environmental
160 Traders Blvd East, Mississauga, ON L4Z 3K7
Tel: (905) 568-2929
Cell: (416) 459-6228
Fax: (905) 568-1686

Point Count Name: B37
UTM:
Start Time 5:25 - 5:35
Habitat: MIXED - SAME AS B36

Species	<50m			<100m			>100m		
	3min	5min	10min	3min	5min	10min	3 min	5min	10min
NOPA	1								
WIWR				1					
CORA									1
RCKI						1			
YRWA				1					
WTSP	1								
NAWA				1					
MAWA	1								
BTNW						1			
BAWW					II				
MOWA	1								
RUGR				1					
AMCR							1		
OVEN				1					
REVI						1			
BTBW	1								
YBSA					1				

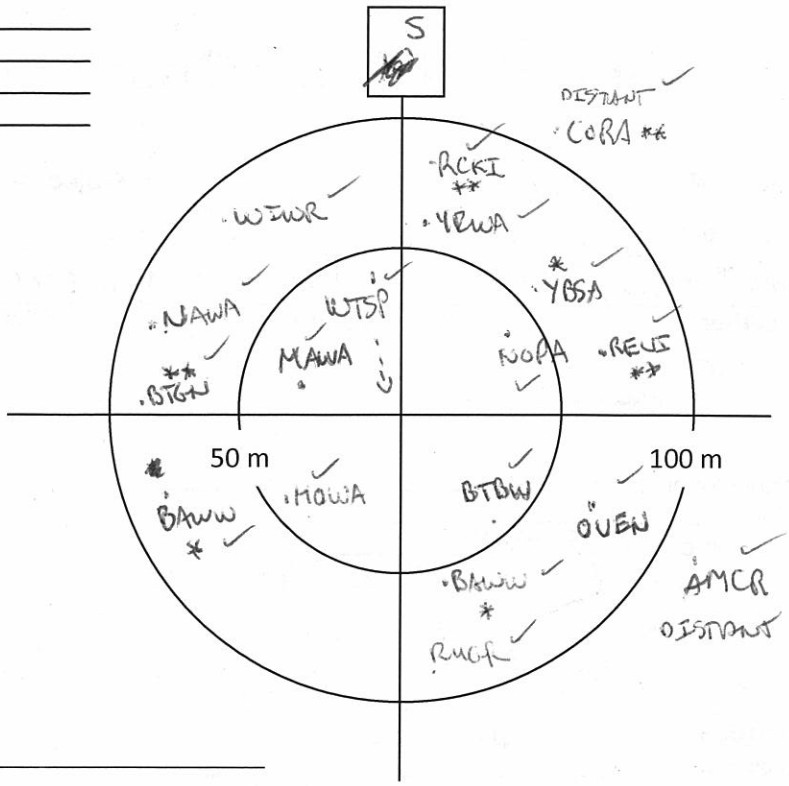

Notes/Incidental observations:

Point Count Name: B32
UTM:
Start Time 5:45 - 5:55
Habitat: SAME AS B36 + B37, SOME CEDAR

Species	<50m			<100m			>100m		
	3min	5min	10min	3min	5min	10min	3 min	5min	10min
WIWR				1					
PUFI						II			
YBSA				1					
NAWA			1	1					
MAWA	1								
HAWO	1								
SWTH	1								
OVEN	1				1				
BHVI				1					
RCKI						1			
RUGR									
BTNW				1					
REVI					1				
RUGR				1					
AMCR							1		

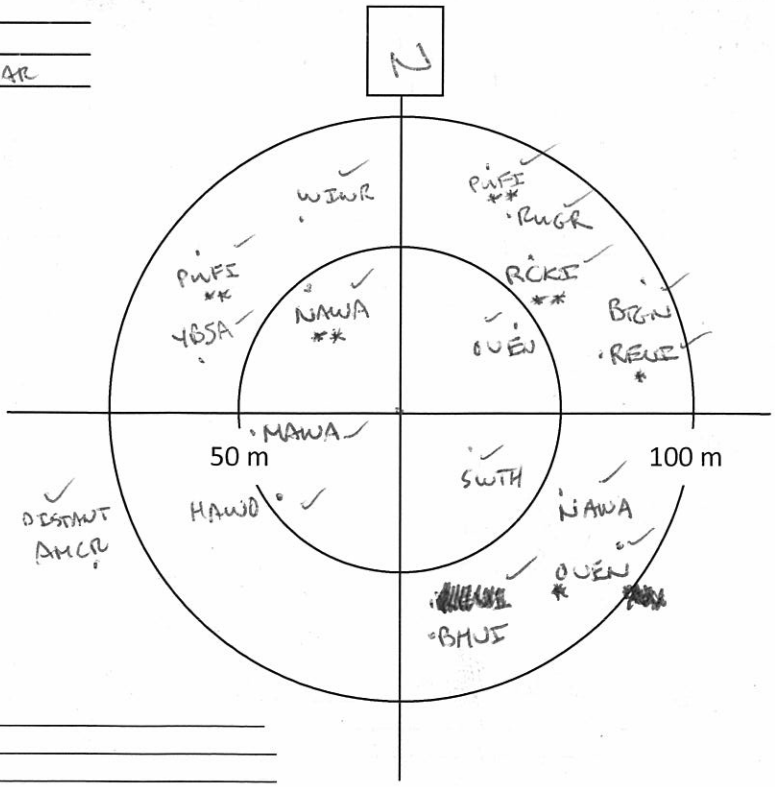

Notes/Incidental observations:

AMEC Earth & Environmental
160 Traders Blvd East, Mississauga, ON L4Z 3K7
Tel: (905) 568-2929
Cell: (416) 459-6228
Fax: (905) 568-1686

Breeding Bird Point Count Survey

Project Name: IMG		**Project Number:** TC121522	
Crew Leader: JEFF BALSDON	**Observers:** J. BALSDON		
Date: JUNE 4/2013	**Start Time (24hr):** 6:47	**End Time (24hr):** 10:00	
Weather: CLEAR	**Temperature:** 5°C	**Wind:** 1	**Precipitation (Circle):** (0) None 1 Haze/Fog 2 Drizzle 3 Rain

Point Count Name: B22
UTM:
Start Time 6:47 - 6:52
Habitat: Sb Ta SWAMP (56% TREE COVER) - TRANSITION? FROM Sb TO Ta
MYRICA RHODORA GAULTHERIA LYCOPODIUM (BRISTLY) SPHAGNUM VEG SPARSE CORNUS COMUS

Species	<50m			<100m			>100m		
	3min	5min	10min	3min	5min	10min	3 min	5min	10min
AMCR							1		
YBSA							1		
NAWA	1								
YRWA	1	1		1					
RCKI	1		1	1		1			
BHVI				1					
RUGR					1				
BLJA					1				
WTSP						1			

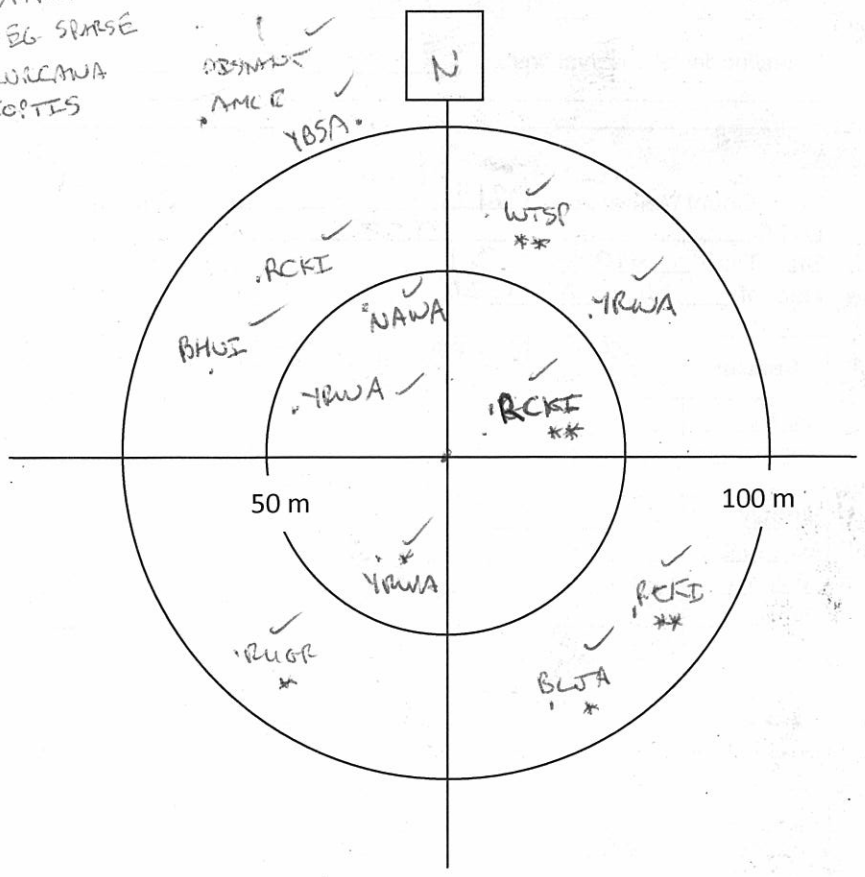

Notes/Incidental observations:

Project Number: TC121522
Survey Date: JUNE 4/2013

AMEC Earth & Environmental
160 Traders Blvd East, Mississauga, ON L4Z 3K7
Tel: (905) 568-2929
Cell: (416) 459-6228
Fax: (905) 568-1686

Point Count Name: B20
UTM:
Start Time 7:06 - 7:16
Habitat: Ta Sb SWAMP - SOME Ce206 (60% TREE COVER)
SAME GROUND VEG AS B22

Species	<50m			<100m			>100m		
	3min	5min	10min	3min	5min	10min	3 min	5min	10min
CORA							1		1
YRWA	1	1		1					
WTSP				1					
WIWR	1				1				
NAWA				1					
AMCR							1		
RCKI	1			1					

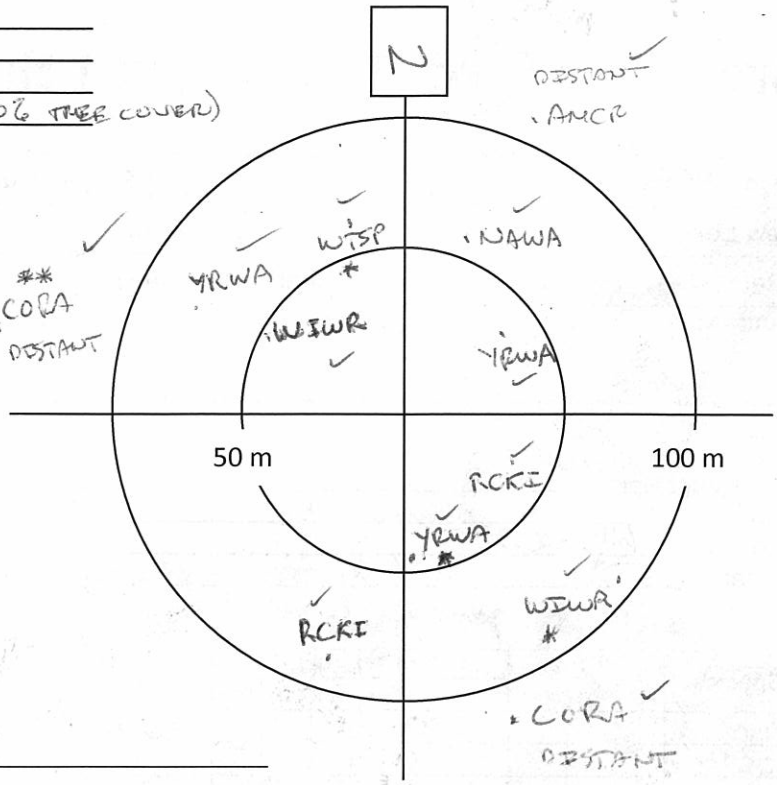

Notes/Incidental observations:

Point Count Name: B21
UTM:
Start Time 7:24 - 7:34
Habitat: SAME AS B20

Species	<50m			<100m			>100m		
	3min	5min	10min	3min	5min	10min	3 min	5min	10min
RCKI	1			1					1
YRWA		1	1	1					
CORA					III				
[illegible]									
WIWR	1								
RBNU	1								
NAWA	II								
BOCH			1						
WTSP				1					
MAWA				1					
SWTH				1					

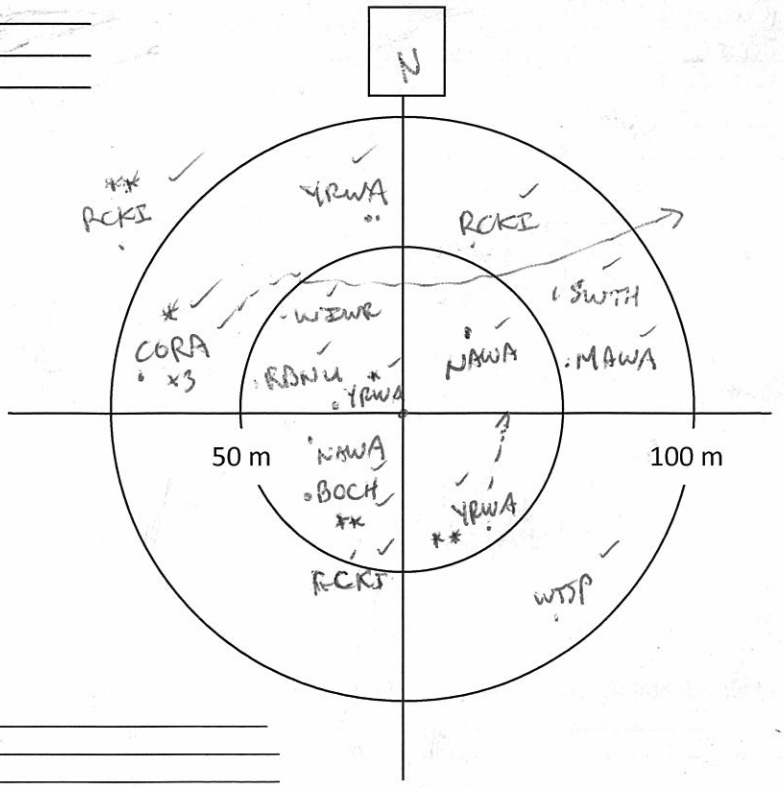

Notes/Incidental observations:

Project Number: TC121522
Survey Date: JUNE 4/2013

AMEC Earth & Environmental
160 Traders Blvd East, Mississauga, ON L4Z 3K7
Tel: (905) 568-2929
Cell: (416) 459-6228
Fax: (905) 568-1686

Point Count Name: B18
UTM:
Start Time 7:45 - 7:55
Habitat: MIXED - BF 50 SW 10 BW 30 AT 10
CORCORN ACESPIC LYCOP. (GROUND PINE)
CLIBORE
TRIBOR
MAICANA
RUBPUBE
CORCANA
BRACKEN

Species	<50m			<100m			>100m		
	3min	5min	10min	3min	5min	10min	3 min	5min	10min
CORA									1
OVEN				III		1			
REVI				II					
BTNW				II					
YBSA	1								
BLBW	1								
~~RBNU~~									
WIWR									1
RUGR	1								
NOPA	5	1							
SWTH				1					
RBNU				1	1				

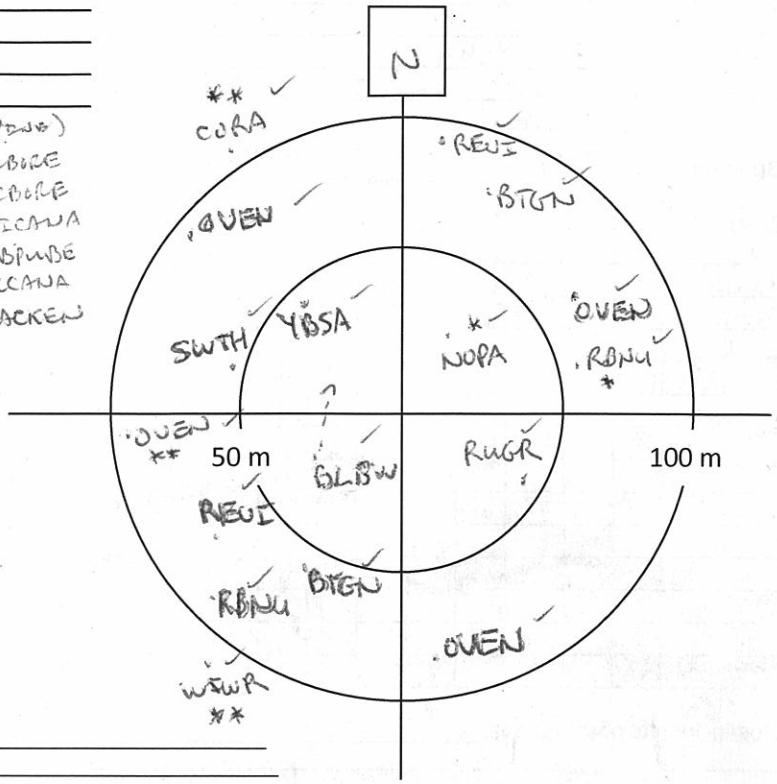

Notes/Incidental observations:

Point Count Name: B17
UTM:
Start Time 8:08 - 8:18
Habitat: SAME AS B18

Species	<50m			<100m			>100m		
	3min	5min	10min	3min	5min	10min	3 min	5min	10min
CAGO							1		
WIWR				1					
NAWA	II			1					
BLBW			1						
RCKI						1			
OVEN				II					
RBNU	1								
BAWW	1								
REVI			1	1					
WTSP				1					
CORA				1					
YRWA				II					
RUGR				1					
RCKI				1					
BTNW					1				

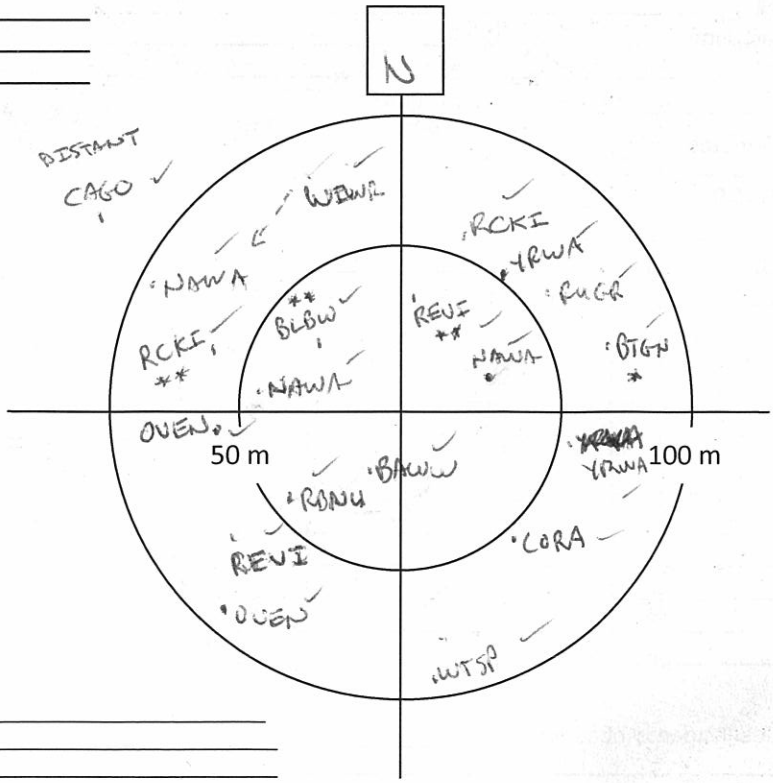

Notes/Incidental observations:

AMEC Earth & Environmental
160 Traders Blvd East, Mississauga, ON L4Z 3K7
Tel: (905) 568-2929
Cell: (416) 459-6228
Fax: (905) 568-1686

Project Number: TC121522
Survey Date: JUNE 4/2013

Point Count Name: B19
UTM: _____
Start Time 8:34-8:44
Habitat: Sb SWAMP - SOME Ta - UEG VERY SPARSE
60% TREE COVER SPHAG. & FEATHER MOSS

Species	<50m			<100m			>100m		
	3min	5min	10min	3min	5min	10min	3 min	5min	10min
WTSP				11			1		
RCKI				11					
NAWA	1			1					
BLJA						1			
CORA							1		
YRWA	1	1							
WIWR				1					

SAME AS B22

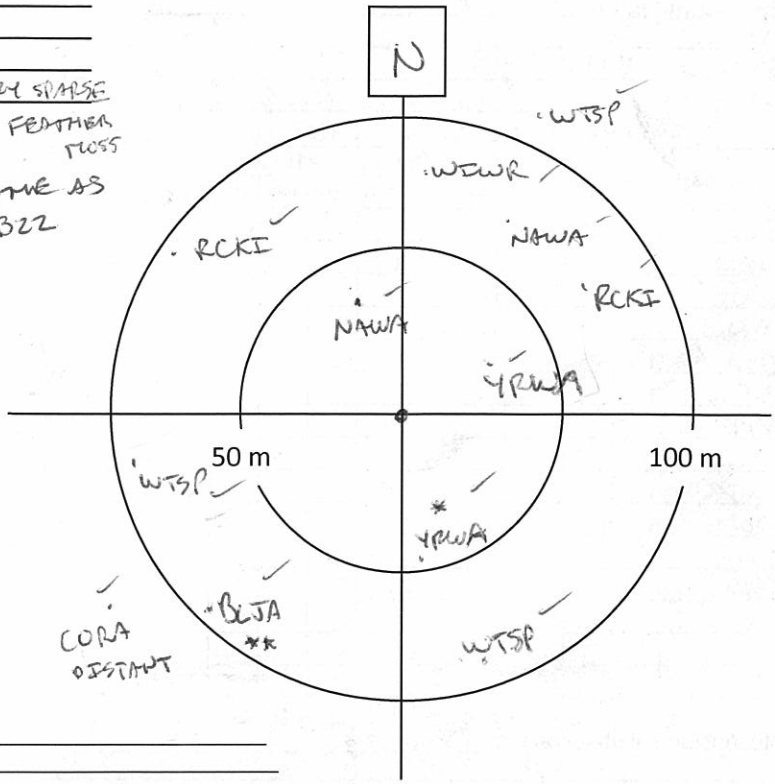

Notes/Incidental observations: _____

Point Count Name: B4
UTM: _____
Start Time 9:20 - 9:30
Habitat: EDGE OF P_j STAND + P_j PLANTATION
VACANT CAMPING

Species	<50m			<100m			>100m		
	3min	5min	10min	3min	5min	10min	3 min	5min	10min
AMCR							1		
HETH				11					
YRWA	1	1		1					
WTSP			1	1	1				
MAWA		1							
OVEN				1					
BCCH			1						

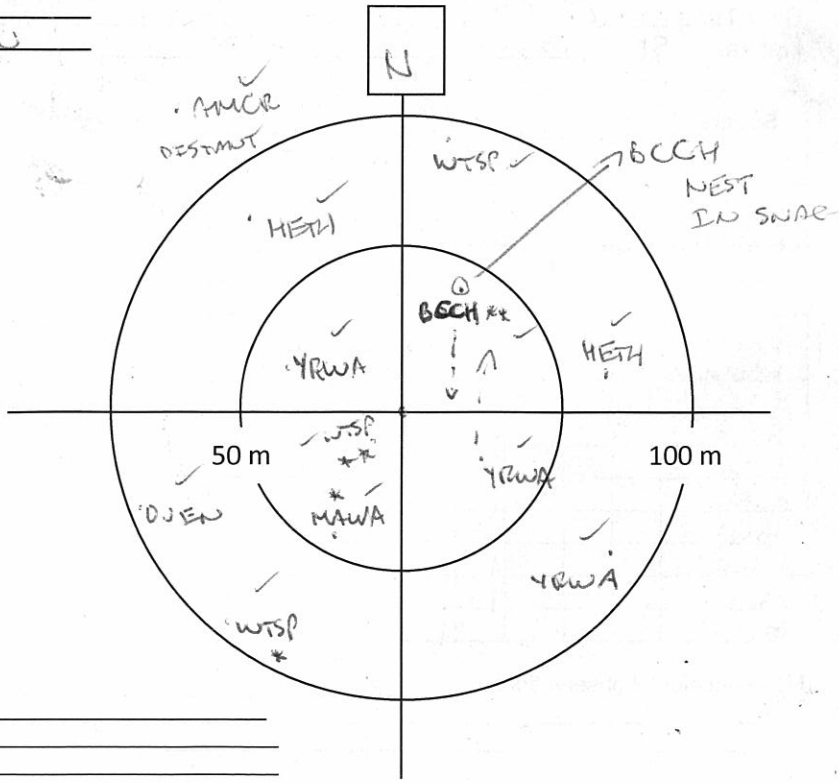

Notes/Incidental observations: _____

Project Number: TC121522
Survey Date: JUNE 4/2013

AMEC Earth & Environmental
160 Traders Blvd East, Mississauga, ON L4Z 3K7
Tel: (905) 568-2929
Cell: (416) 459-6228
Fax: (905) 568-1686

Point Count Name: B9
UTM:
Start Time 9:38 - 9:48
Habitat: Pj FOREST Sb 5% Sw 5% (Sb+Sw REGEN)
50% COVER GAUPROB ABUNDANT, VACANGU, FEATHERMOSS
MEIN DEER
LICHEN
SWEET FERN

OPEN CANOPY

Species	<50m			<100m			>100m		
	3min	5min	10min	3min	5min	10min	3 min	5min	10min
RCKI				1					
CORA							1		
MAWA				11					
NAWA	1								
WTSP				111					
YRWA	1								
OVEN				1			1		
HETH		1		1					

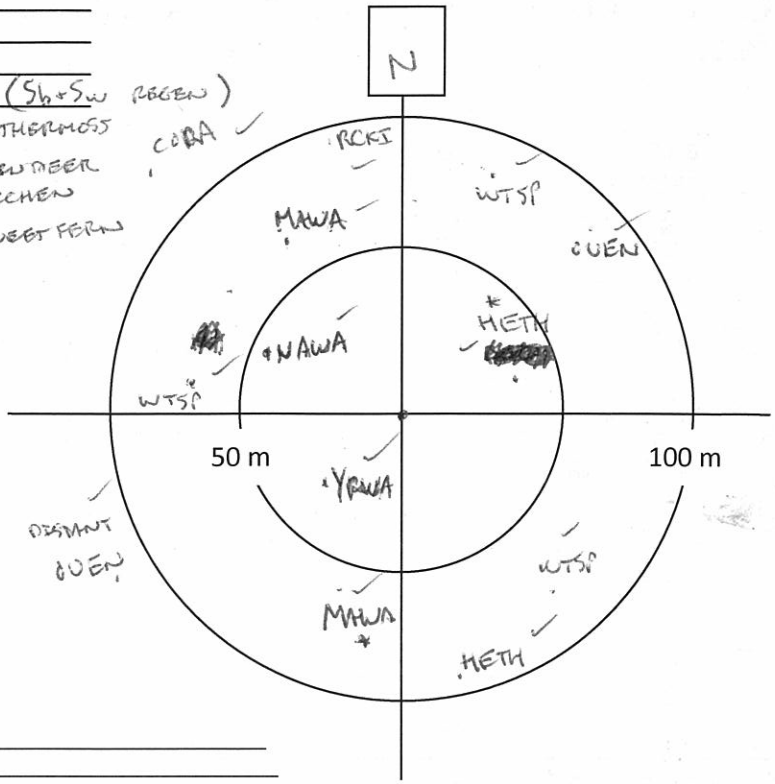

Notes/Incidental observations:

Point Count Name:
UTM:
Start Time
Habitat:

Species	<50m			<100m			>100m		
	3min	5min	10min	3min	5min	10min	3 min	5min	10min

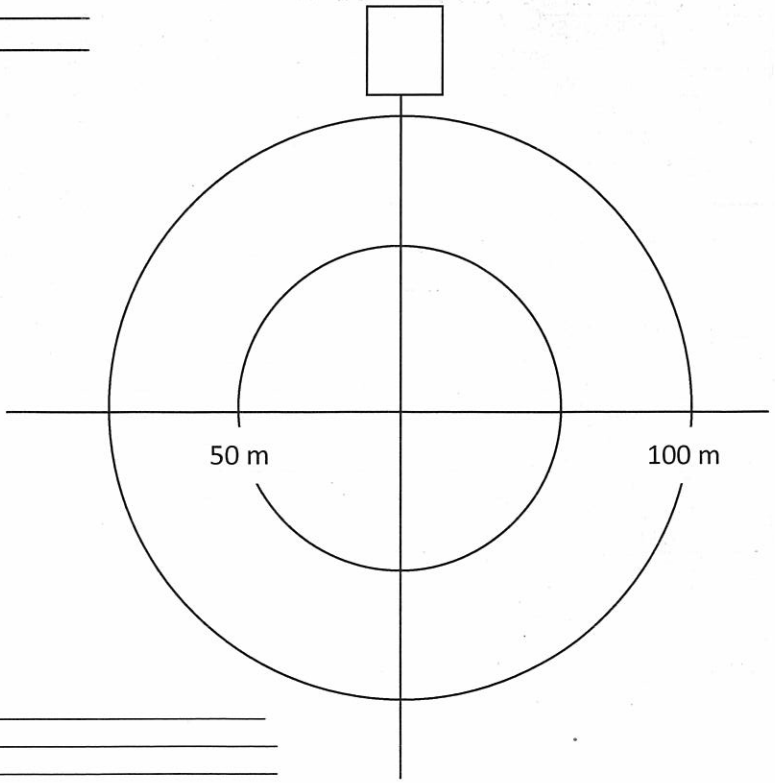

Notes/Incidental observations:

AMEC Earth & Environmental
160 Traders Blvd East, Mississauga, ON L4Z 3K7
Tel: (905) 568-2929
Cell: (416) 459-6228
Fax: (905) 568-1686

Breeding Bird Point Count Survey

Project Name: IAMGOLD		Project Number: TC121522	
Crew Leader: Jeff Balsdon	Observers: LEL Leah Lefler		
Date: 04 June 2013	Start Time (24hr): 0510	End Time (24hr): 1009	
Weather: clear, no rain	Temperature: 5°C	Wind: 1	Precipitation (Circle): (0) None 1 Haze/Fog 2 Drizzle 3 Rain

Point Count Name: BB30
UTM: _____
Start Time 0510 End: 0520
Habitat: PICABIE, BETPAP4, transition between upland & swamp.

Species	<50m			<100m			>100m		
	3min	5min	10min	3min	5min	10min	3 min	5min	10min
RCKI	1			1					
OVEN				1					
WIWR				1					
WTSP				1					
HETH						1			
DOWO			1						
NAWI					1				
AMCR							1		
COLO								1	

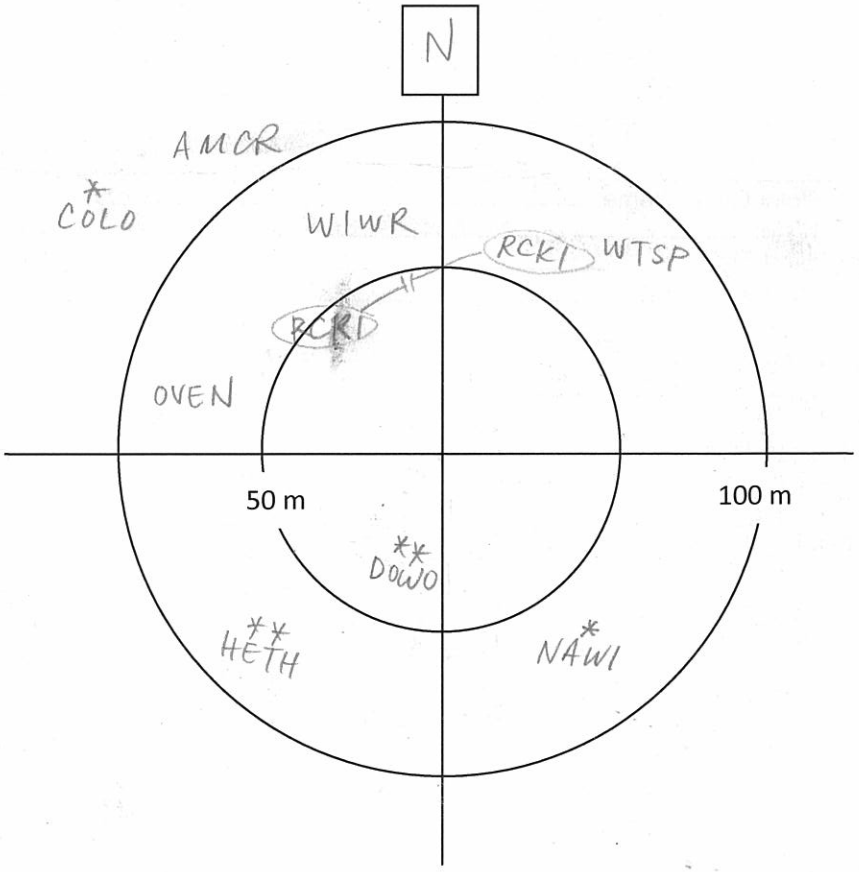

Notes/Incidental observations: RESQ

Project Number: TC121522
Survey Date: JUNE 4, 2013

AMEC Earth & Environmental
160 Traders Blvd East, Mississauga, ON L4Z 3K7
Tel: (905) 568-2929
Cell: (416) 459-6228
Fax: (905) 568-1686

Point Count Name: BB33
UTM:
Start Time 0531 End 0542
Habitat: BETPAP4, mountain maple, PICABIE young forest DIELON1, MAICANA ENRMACR

Species	<50m			<100m			>100m		
	3min	5min	10min	3min	5min	10min	3 min	5min	10min
YRWA	1				1				
OVEN	1			2			1		
RUGR	1								
BRCR	1								
MAWA				1					
YBFL				1					
NOPA					1				
BGWA						1			
NAWA					1				
REVI						1			
AMCR								1	

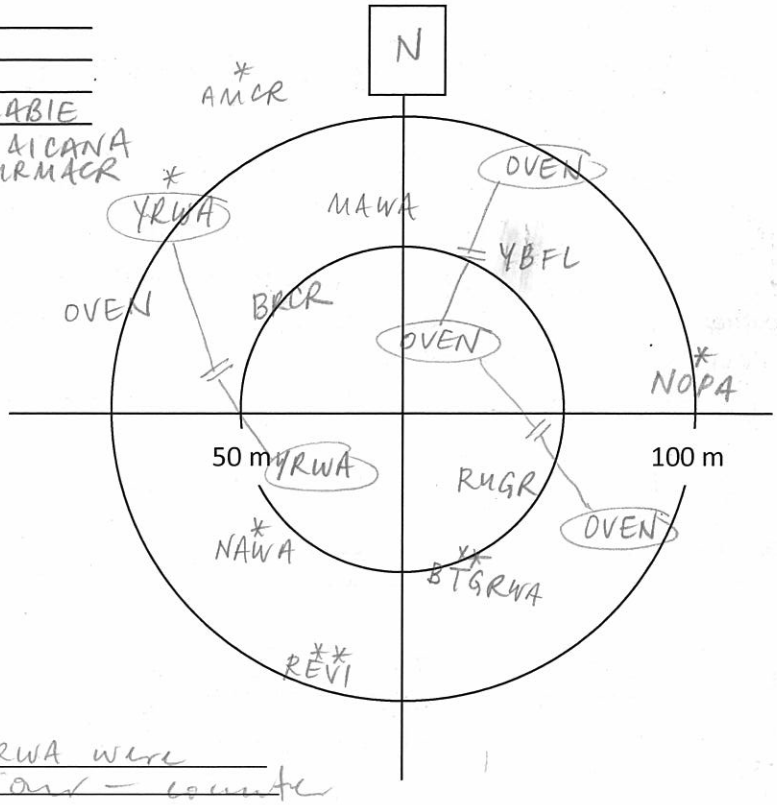

Notes/Incidental observations: RESQ; OVEN + YRWA were displaying territorial behaviour — counter singing

Point Count Name: BB31
UTM:
Start Time 0554 0604
Habitat: THUOCCI PICNIGR swamp. SWC Labrador Tea

Species	<50m			<100m			>100m		
	3min	5min	10min	3min	5min	10min	3 min	5min	10min
DOWO	1								
NAWA	1			1					
BCCH	1								
YRWA					1				
HETH				1					
WTSP					1	1			
WIWR				1					
RCKI				1					
RCKI									

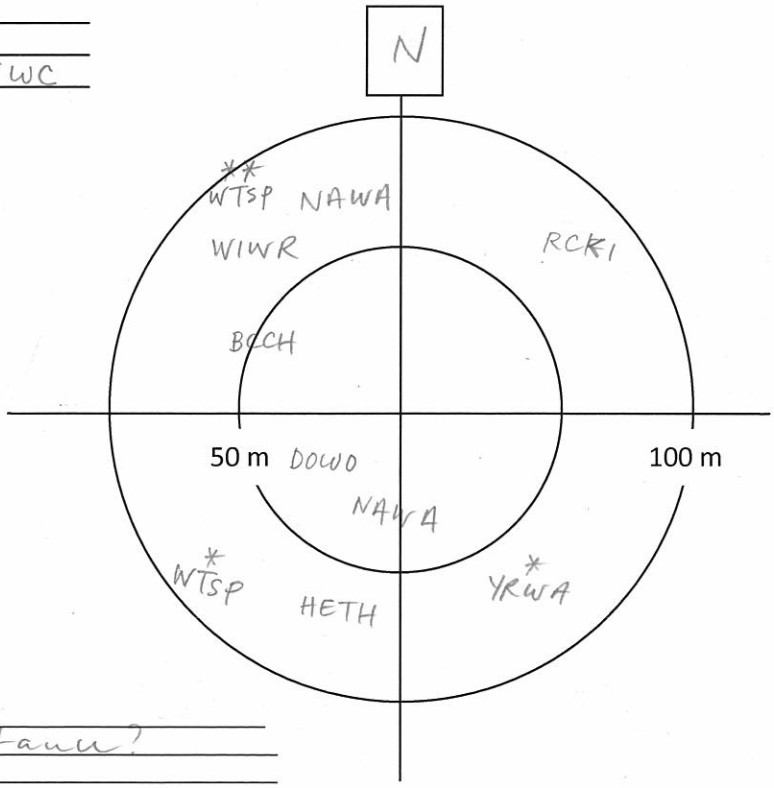

Notes/Incidental observations: SPPEL-1
SHCR off in distance?

Project Number: TC121522
Survey Date: JUNE 4, 2013

AMEC Earth & Environmental
160 Traders Blvd East, Mississauga, ON L4Z 3K7
Tel: (905) 568-2929
Cell: (416) 459-6228
Fax: (905) 568-1686

Point Count Name: BB29
UTM:
Start Time 0645 End 0655
Habitat: black spruce Labrador Tea mossy.

Species	<50m			<100m			>100m		
	3min	5min	10min	3min	5min	10min	3 min	5min	10min
MAWA			1						
WTSP		1							
REVI						1			
NAWA				2					
YBFL				1					
YRWA				1					
RCKI				1					
WIWR				1					

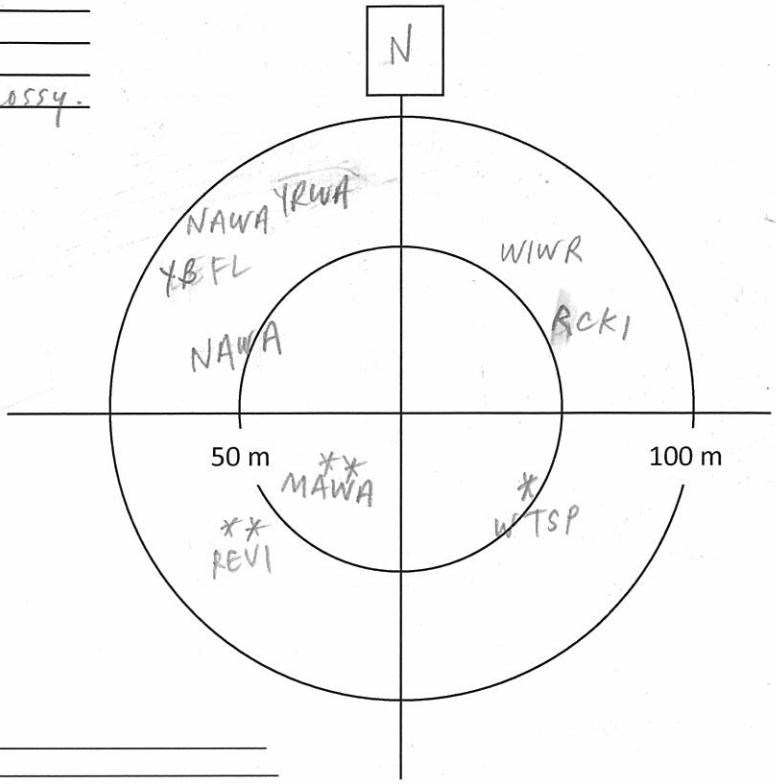

Notes/Incidental observations: RESQ
to NE is an alder SWT

Point Count Name: BB28
UTM:
Start Time 0702 End 0712
Habitat: PICABIC black spruce Sorbus bunchberry MALCANA

Species	<50m			<100m			>100m		
	3min	5min	10min	3min	5min	10min	3 min	5min	10min
MOWA		1							
BCCH	1								
RCKI				2					
RUGR				1					
WIWR					1	1			
MAWA						1			
AMRE						1			

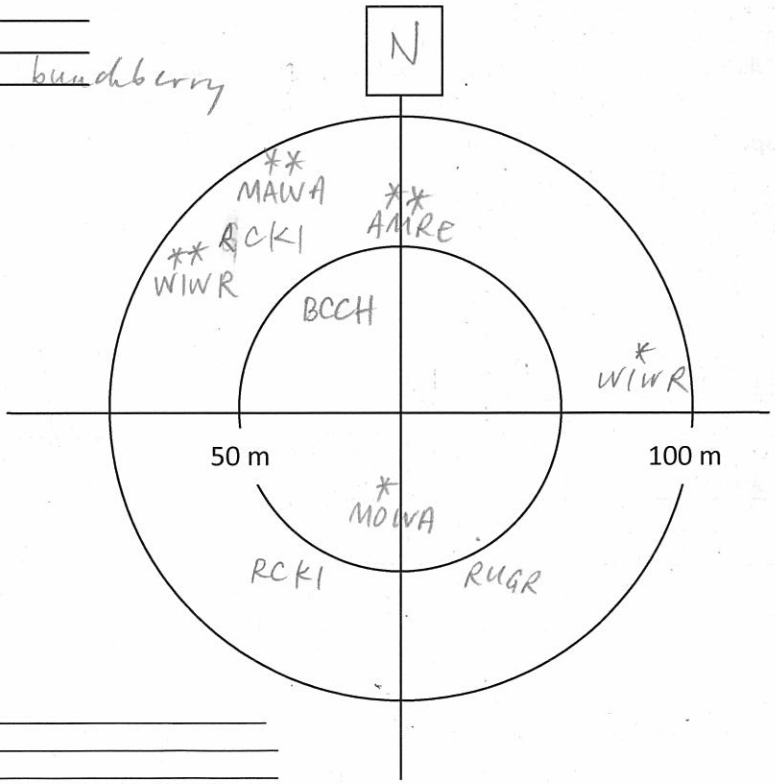

Notes/Incidental observations: moose droppings
RESQ

Project Number: TC121522
Survey Date: JUNE 4, 2013

AMEC Earth & Environmental
160 Traders Blvd East, Mississauga, ON L4Z 3K7
Tel: (905) 568-2929
Cell: (416) 459-6228
Fax: (905) 568-1686

Point Count Name: BB25
UTM:
Start Time 0724 End 0734
Habitat: hemlock's BETPAP's balsam fir=90

Species	<50m			<100m			>100m		
	3min	5min	10min	3min	5min	10min	3 min	5min	10min
BCCH	1								
WIWR			1						
RUGR					1				
NOPA				1					
MAWA				1					
NAWA				1					
GRJA				1					
CAWA				1					
CORA							1		

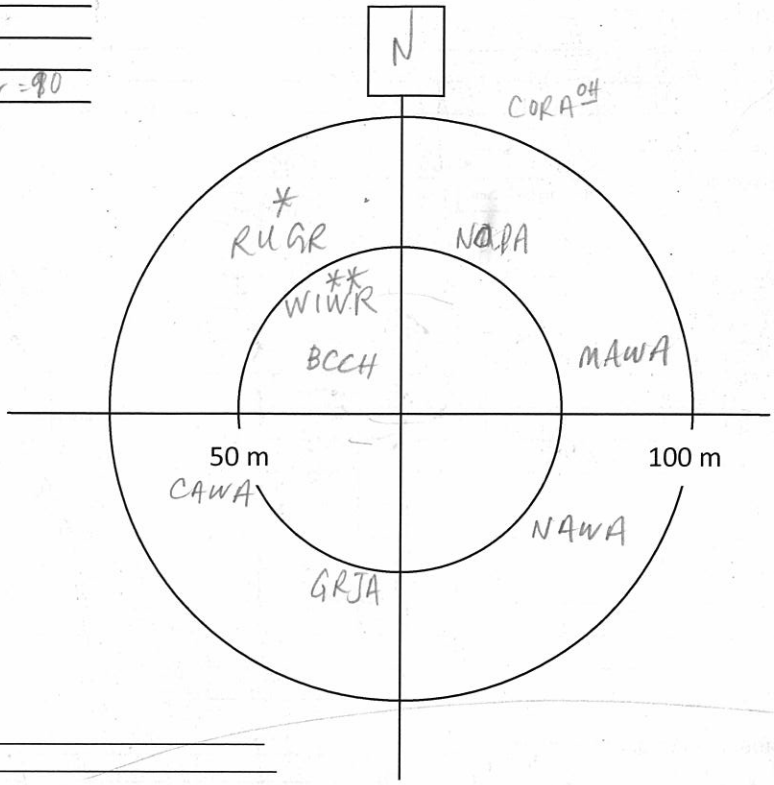

Notes/Incidental observations: RESQ

Point Count Name: BB24
UTM:
Start Time 0747 End 0757
Habitat: alder labrador tea, Balsam Fir 70 black spruce 30 vaccinium.
SWC+SWT complex

Species	<50m			<100m			>100m		
	3min	5min	10min	3min	5min	10min	3 min	5min	10min
YRWA						1			
NAWA				1					
RCKI				1					
WIWR	1								
WTSP	1			1					
AMRE				1					
HETH					1				
BHVI				1					
RBNH					1				
MAWA					1				

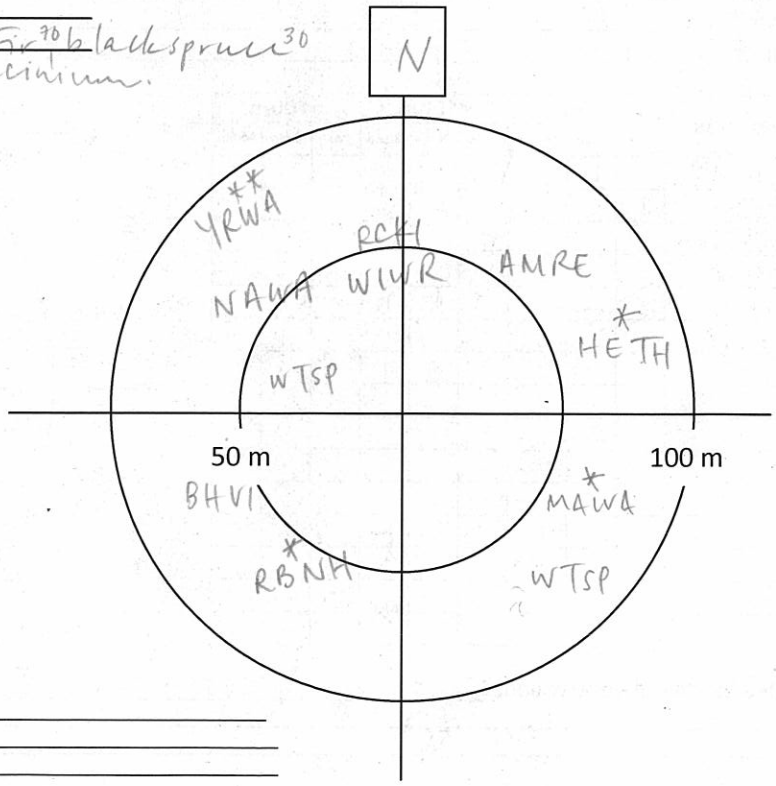

Notes/Incidental observations: RESQ

Project Number: TC121522
Survey Date: JUNE 4, 2013

AMEC Earth & Environmental
160 Traders Blvd East, Mississauga, ON L4Z 3K7
Tel: (905) 568-2929
Cell: (416) 459-6228
Fax: (905) 568-1686

Point Count Name: BB12
UTM:
Start Time 0919 end 0929
Habitat: jack pine 40 POPTREM 30 FOD. black ash 20 BETPAPY 10 bunchberry Labrador Tea

Species	<50m			<100m			>100m		
	3min	5min	10min	3min	5min	10min	3 min	5min	10min
WTSP				1					
OVEN	1			1					
REVI		1							
RUGR			1						
BTBW	1								

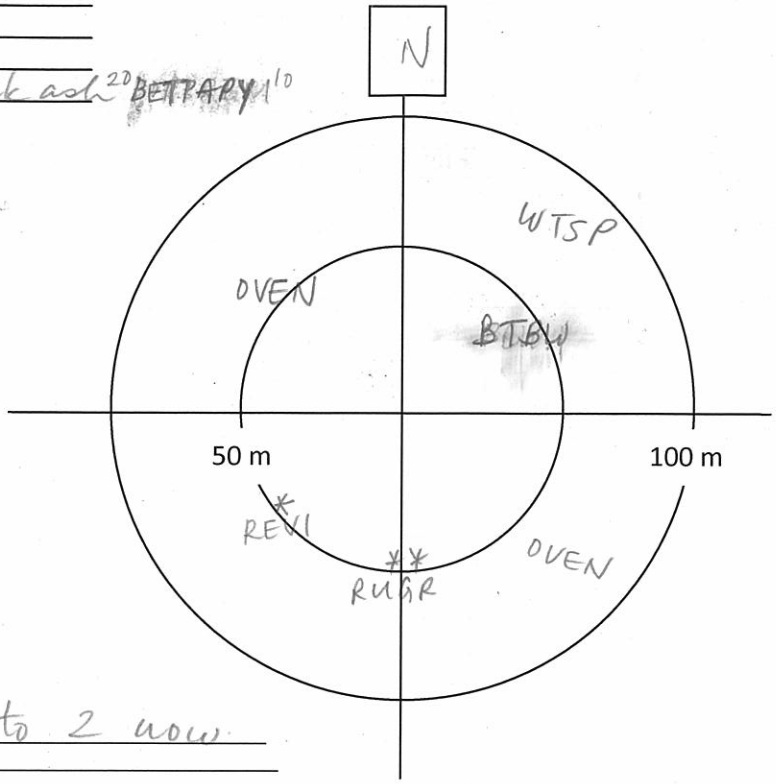

Notes/Incidental observations: wind gusting to 2 now.

Point Count Name: BB3
UTM:
Start Time 0940 end: 0951
Habitat: sphagnum clearing w blueberries, surrounded by BALSAM FIR, BETPAPY, wintergreen FOC.

Species	<50m			<100m			>100m		
	3min	5min	10min	3min	5min	10min	3 min	5min	10min
YRWA		1							
MAWA	1								
MoWA	1								
NAWA	1			1					
BTBW				1					
YEWA						1			
WTSP				1	1				
HETH				1					
CORA				1					
OVEN						1			
RBNH						1			

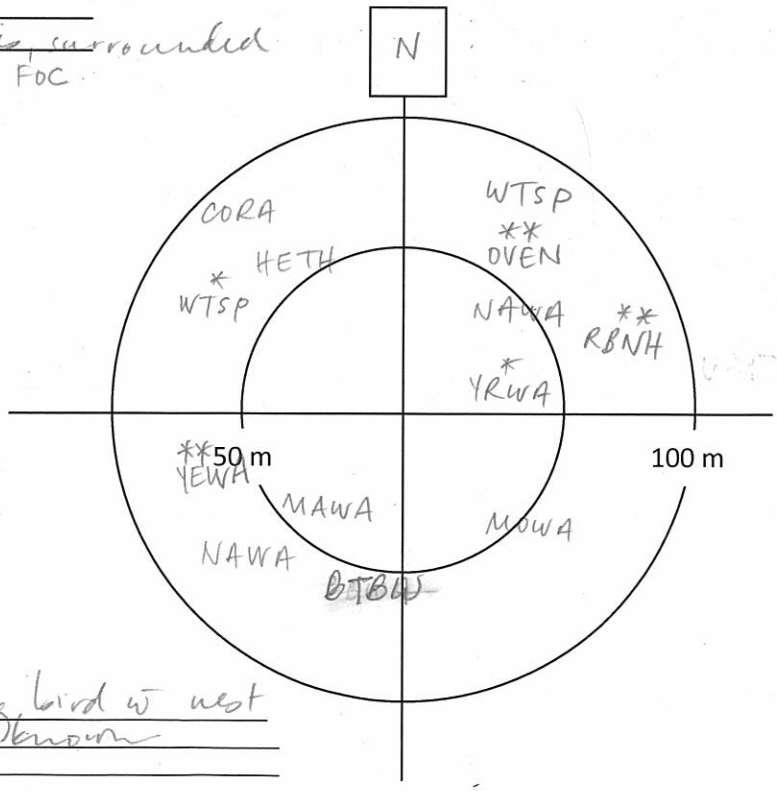

Notes/Incidental observations: flushed a nesting bird w nest w 4 blue eggs. -> species unknown

AMEC Earth & Environmental
160 Traders Blvd East, Mississauga, ON L4Z 3K7
Tel: (905) 568-2929
Cell: (416) 459-6228
Fax: (905) 568-1686

Project Number: TC121522
Survey Date: JUNE 4, 2009

Point Count Name: BB23
UTM:
Start Time 0809 end 0819
Habitat: black spruce 80 balsam fir 10 labrador tea
mossy hummocks SWC

Species	<50m			<100m			>100m		
	3min	5min	10min	3min	5min	10min	3 min	5min	10min
NAWA	1					1			
BBWA	1								
BCCH				1					
CEDW						1			
WTSP					1	1			
RCKI				1					
CAGO							1		

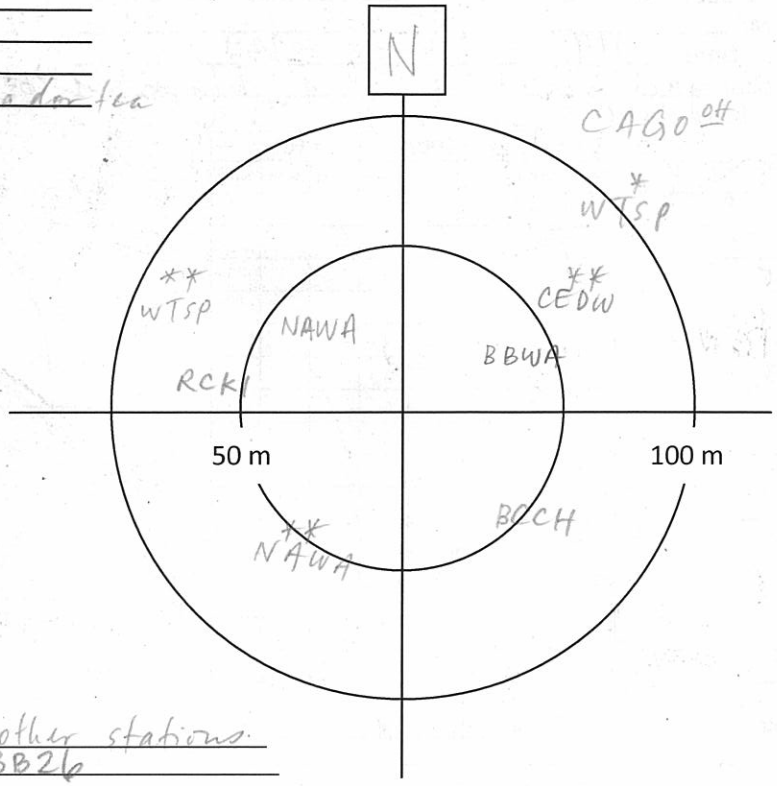

Notes/Incidental observations: quiet compared to other stations.
- heard BBWA on way to BB26

Point Count Name: BB26
UTM:
Start Time 0833 end 0844
Habitat: PICNIGR 90 BETPAPY 5 PICABIES
blueberry, bunchberry, honeysuckle CLIBORE
EPIREPE
sphagnum

Species	<50m			<100m			>100m		
	3min	5min	10min	3min	5min	10min	3 min	5min	10min
OVEN	1		1						
YBFL				1					
AMRO	1								
GRJA					1				
REVI						1			
MAWA	1								
BBWA		1							
NAWA				1					
YRWA					1				

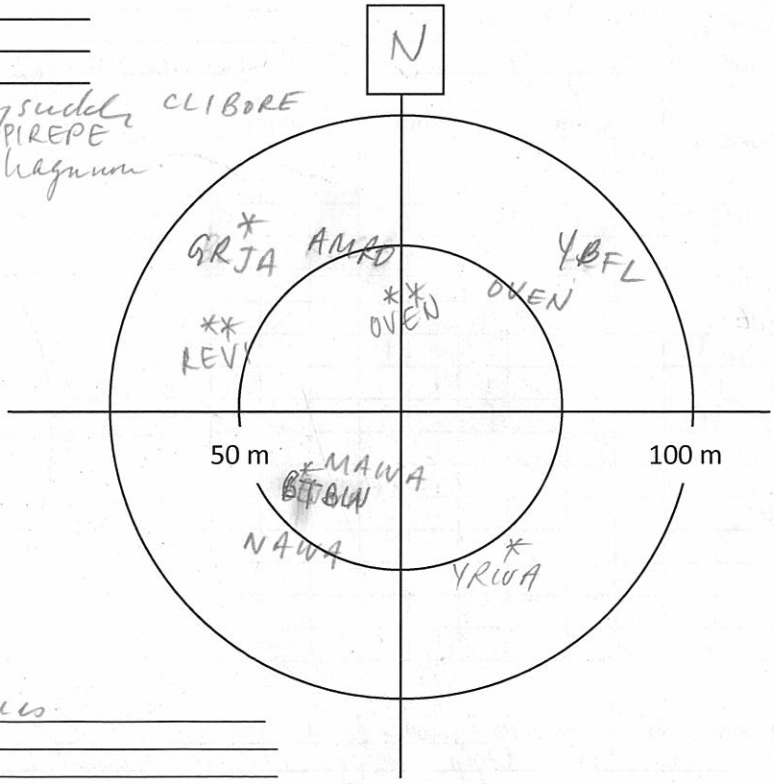

Notes/Incidental observations: lots of fallen trees

Project Number: TC121522
Survey Date: JUNE 4, 2013

AMEC Earth & Environmental
160 Traders Blvd East, Mississauga, ON L4Z 3K7
Tel: (905) 568-2929
Cell: (416) 459-6228
Fax: (905) 568-1686

Point Count Name: BB2
UTM:
Start Time 0958 end 1009
Habitat: BETPAPY 10 PICBALS 70 POPTREM20 - near clearing (20m x 20m) w/ blueberry wintergreen

Species	<50m			<100m			>100m		
	3min	5min	10min	3min	5min	10min	3 min	5min	10min
NAWA			1						
MAWA		1		1					
RBNH						1			
SWTH				1					
BBWA				1					
OVEN				1	1				
RCKI				1					

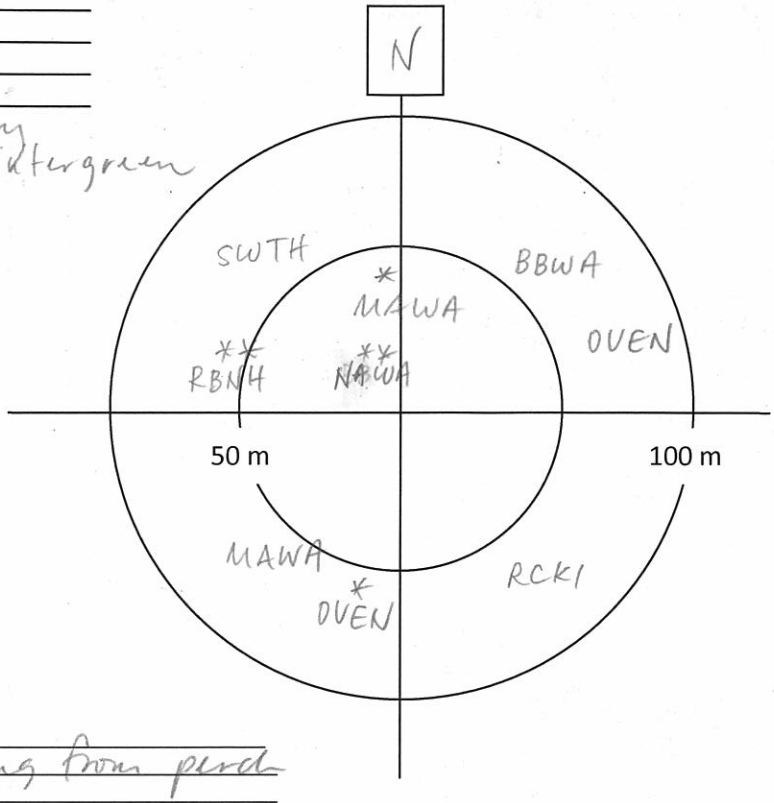

Notes/Incidental observations: wind = 2 now.
BBWA flew right up close and sang from perch near pt. count.

Point Count Name:
UTM:
Start Time
Habitat:

Species	<50m			<100m			>100m		
	3min	5min	10min	3min	5min	10min	3 min	5min	10min

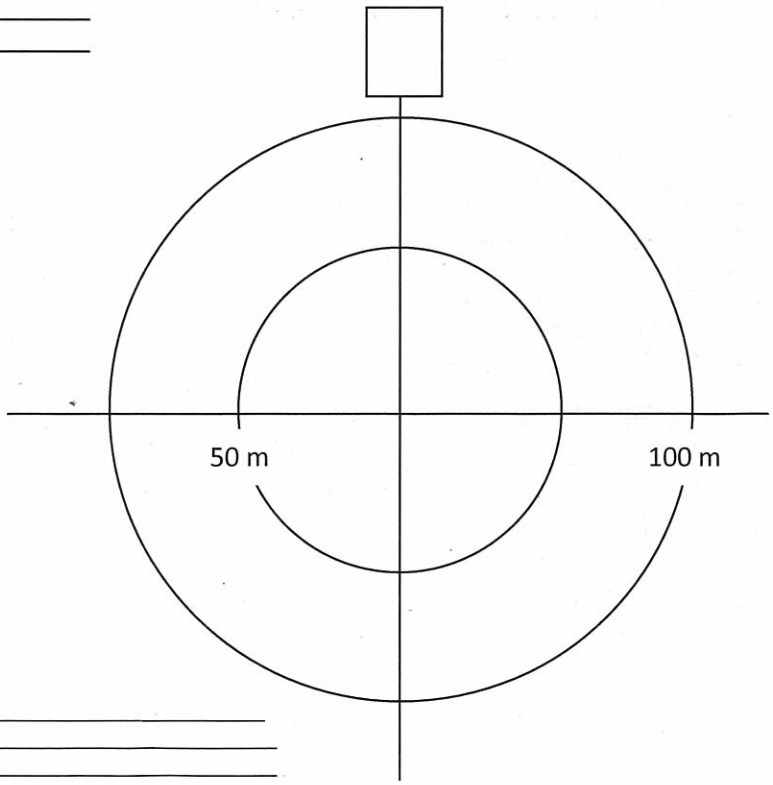

Notes/Incidental observations:

Project Number: TC121522
Survey Date: JUNE 4, 2013

AMEC Earth & Environmental
160 Traders Blvd East, Mississauga, ON L4Z 3K7
Tel: (905) 568-2929
Cell: (416) 459-6228
Fax: (905) 568-1686

Other Wildlife Observations **Species at Risk

Obs?	Species	Waypoint	Notes
	Virginia Opossum		
	Shrew sp		
	Star-nosed Mole		
	Bat Sp.		
	Eastern Cottontail		
	Snowshoe Hare		
	European Hare		
	Eastern Chipmunk		
	Woodchuck		
	Grey Squirrel		
✓	Red Squirrel		abundant
	Flying Squirrel sp		
	Beaver		
	Mouse sp		
	Muskrat		
	Meadow Vole		
	Porcupine		
	Coyote		
	Grey Wolf		
	Red Fox		
	Black Bear		
	Raccoon		
	Mink		
	Striped Skunk		
	White-tailed Deer		
SCW	Moose		abundant
	Snapping Turtle**		
	Midland Painted Turtle		
	Western Painted Turtle		
	Northern Map Turtle**		
	Blanding's Turtle**		
	Eastern Gartersnake		
	East. Ribbon Snake**		
	Northern Watersnake		
	Redbelly Snake		
	Brown Snake		
	Smooth Greensnake		
	Ringneck Snake		
	Eastern Milksnake**		
	Red-spotted Newt		
	Bl.-spotted Salamander		
	Spotted Salamander		
	Four-toed Salamander		
	Northern Redback		
	American Toad		
	Western Chorus Frog**		
	Boreal Chorus Frog		
✓	Spring Peeper		a few calling
	Gray Treefrog		
	Bullfrog*		
	Northern Green Frog		
	Wood Frog		
	Northern Leopard Frog		
	Mink Frog		

Other Species	Waypoint	Notes

AMEC Earth & Environmental
160 Traders Blvd East, Mississauga, ON L4Z 3K7
Tel: (905) 568-2929
Cell: (416) 459-6228
Fax: (905) 568-1686

Breeding Bird Point Count Survey

Project Name: IAMGOLD		**Project Number:** TC121522	
Crew Leader: JP	**Observers:** Jon Pleizier		
Date: June 8, 2013	**Start Time (24hr):** 05:15	**End Time (24hr):**	
Weather: 0% cloud cover	**Temperature:** 6°C	**Wind:** 0	**Precipitation (Circle):** (0) None 1 Haze/Fog 2 Drizzle 3 Rain

Point Count Name: BB74
UTM: _____
Start Time 05:34
Habitat: _____

Species	<50m			<100m			>100m		
	3min	5min	10min	3min	5min	10min	3 min	5min	10min
WIWR	1			1					
REVI				1					
BTNW	1								
HETH				1					
AMRE					1				
WTSP									1
BTBW						1			
MAWA			1			1			

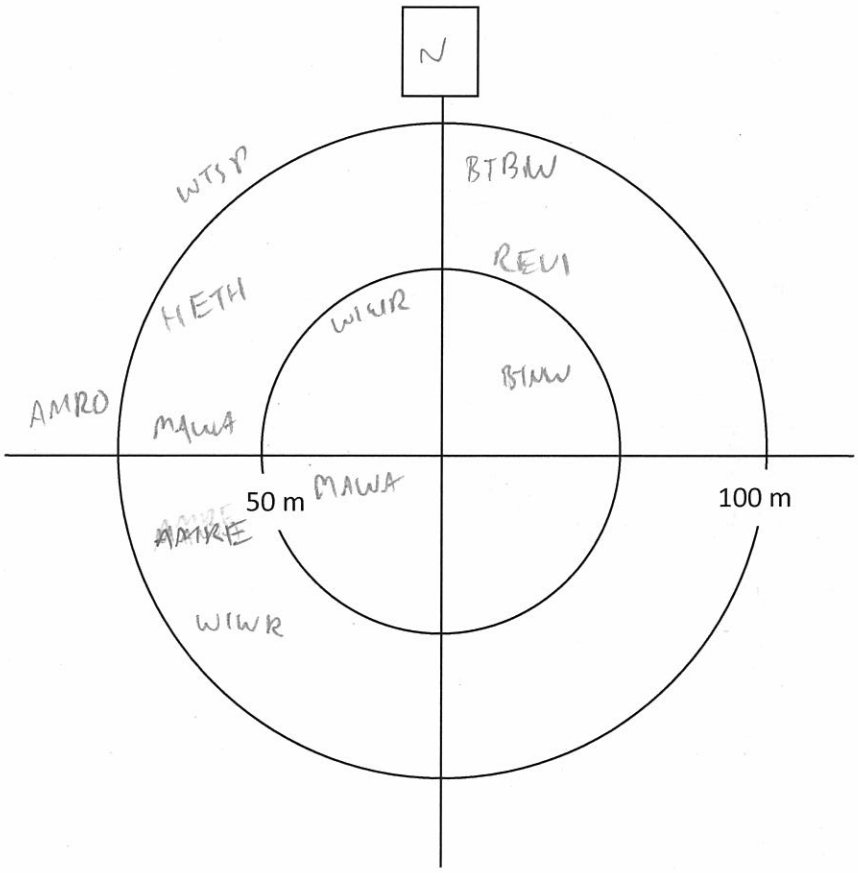

Notes/Incidental observations: MOWA en route

Project Number: TC121522
Survey Date: June 8, 2013

AMEC Earth & Environmental
160 Traders Blvd East, Mississauga, ON L4Z 3K7
Tel: (905) 568-2929
Cell: (416) 459-6228
Fax: (905) 568-1686

Point Count Name: BB77
UTM:
Start Time 05:55
Habitat:

Species	<50m			<100m			>100m		
	3min	5min	10min	3min	5min	10min	3 min	5min	10min
WTSP							11		
HETH							1		
AMCR							1		
WIWR				1					
NOPA				1					
UNWO					1				
NOFL					1				
AMRO									IF
MAWA						1			
BAWW			1						
TEWA									1

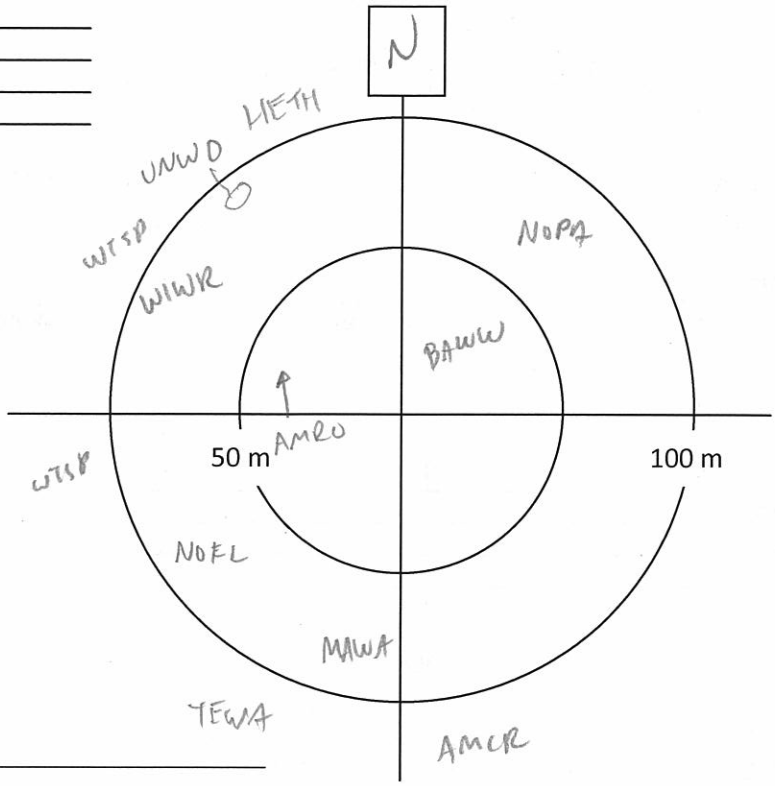

Notes/Incidental observations:

Point Count Name: BB79
UTM:
Start Time 06:14
Habitat:

Species	<50m			<100m			>100m		
	3min	5min	10min	3min	5min	10min	3 min	5min	10min
HETH				1					
NAWA	1			11	1	1			
MAWA	1								
RCKI	1			1		1			
SACR							1		
WIWR				1					
WTSP	1								11
UNWO								1	
MOWA						1			
CEDW									FO
YBFL						1			
[illegible]									
PIWO									1
AMCR									11
YRWA						1			

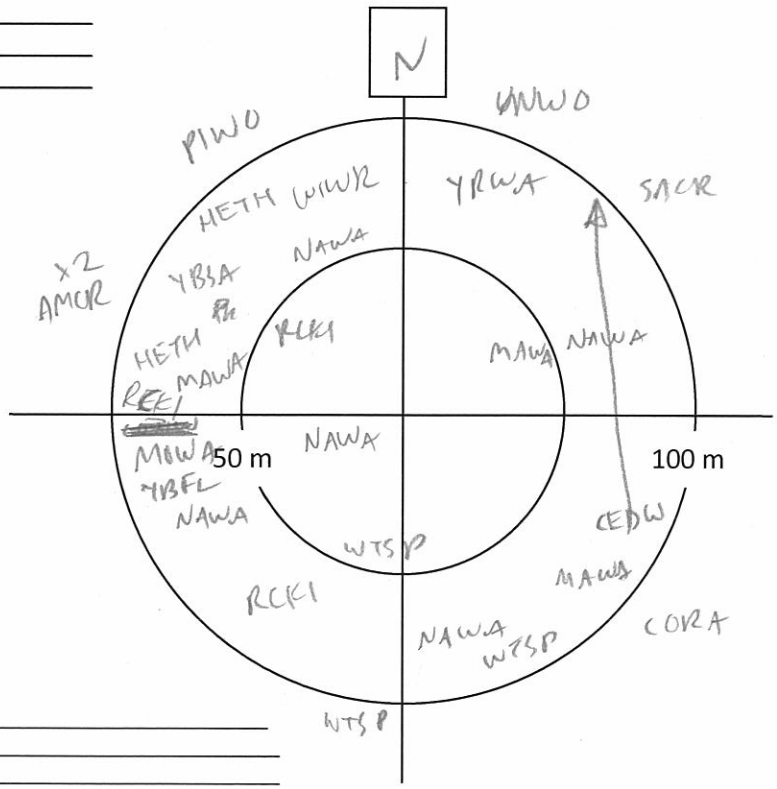

Notes/Incidental observations:

Project Number: TC121522
Survey Date: June 4, 2013

AMEC Earth & Environmental
160 Traders Blvd East, Mississauga, ON L4Z 3K7
Tel: (905) 568-2929
Cell: (416) 459-6228
Fax: (905) 568-1686

Point Count Name: BB82
UTM:
Start Time 07:01
Habitat:

Species	<50m			<100m			>100m		
	3min	5min	10min	3min	5min	10min	3 min	5min	10min
NAWA				II			I		
SWTH				I					
ALFL				I					
WTSP	I			II					
CSWA	I								
MOWA							I		
MAWA	I					I		I	
BLJA						I			
CORA									
NOFL								I	

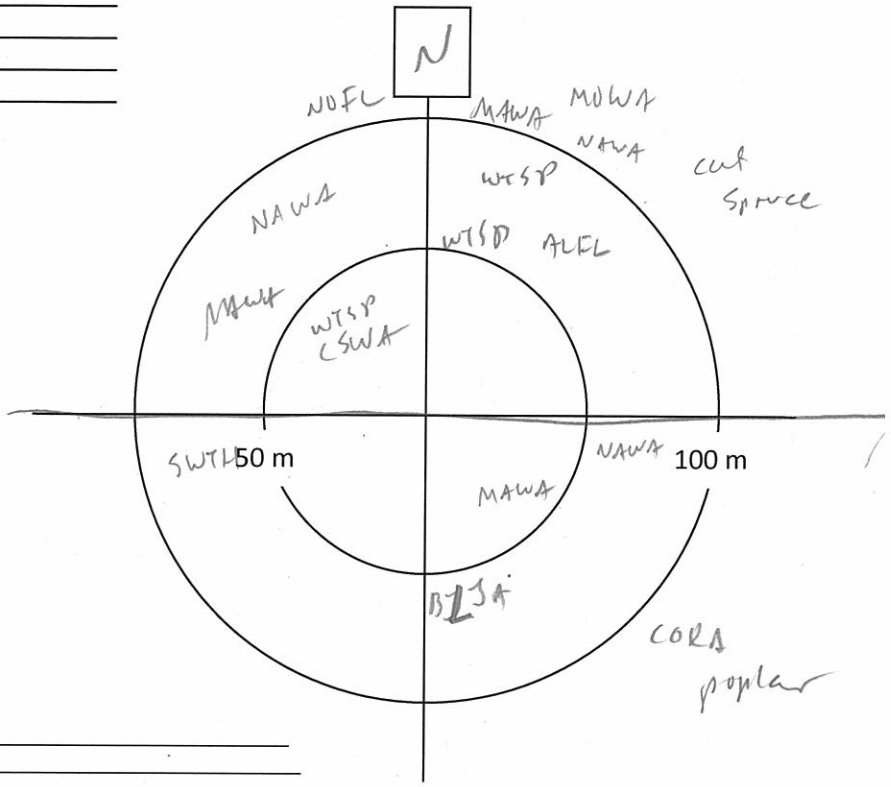

Notes/Incidental observations: RESQ

Point Count Name: BB81
UTM:
Start Time 06:41
Habitat:

Species	<50m			<100m			>100m		
	3min	5min	10min	3min	5min	10min	3 min	5min	10min
WTSP							III		
BLCH							II		
BAWW	I								
WIWR				I					
MAWA	IIII								
ALFL				I	I				
CORA								II	
WISN					I				
REVI						I			
NAT BLJA						I			
NAWA						I			

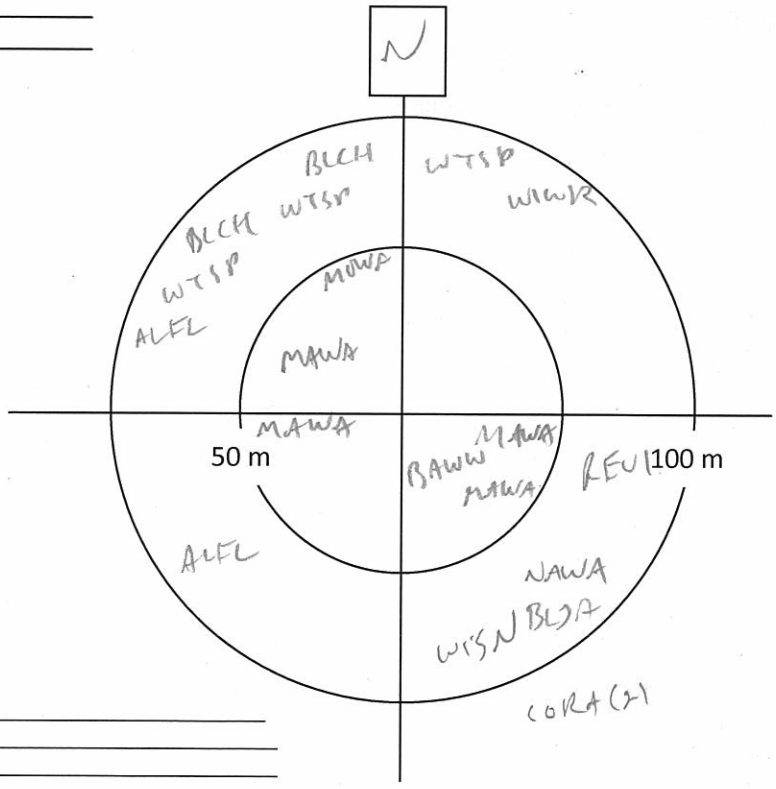

Notes/Incidental observations:

Project Number: 7C121522
Survey Date: June 8, 2017

AMEC Earth & Environmental
160 Traders Blvd East, Mississauga, ON L4Z 3K7
Tel: (905) 568-2929
Cell: (416) 459-6228
Fax: (905) 568-1686

Point Count Name: BB46
UTM:
Start Time 07:32
Habitat:

Species	<50m			<100m			>100m		
	3min	5min	10min	3min	5min	10min	3 min	5min	10min
BEKI									
HETH							1		
WTSP				1			1		
RBNU							1		
NAWA	1						1		
WIWR							1		1
RCEI							1		
CHSP							1	#	
CORA						1			

FO

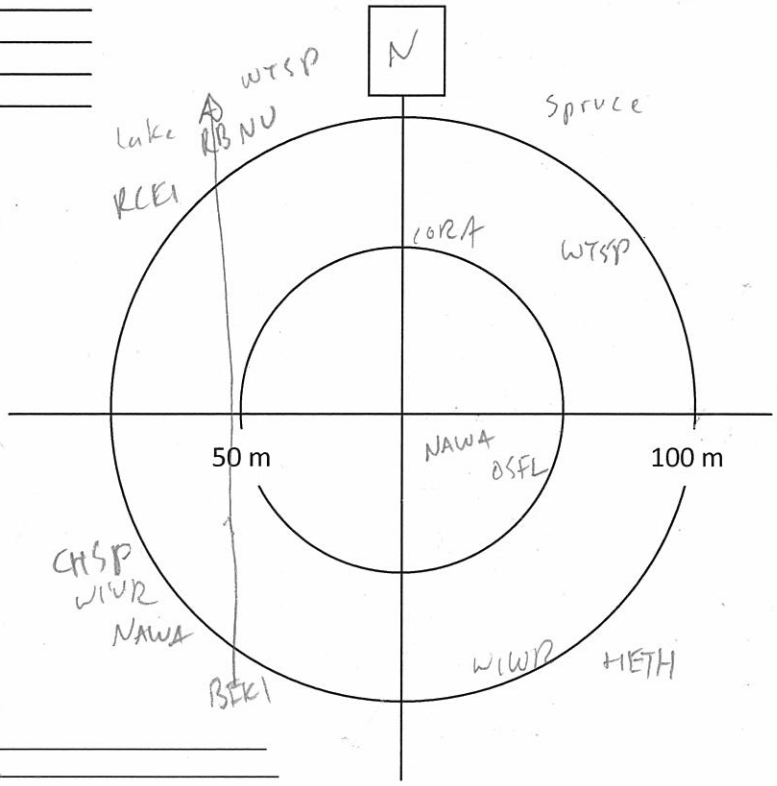

Notes/Incidental observations: RESP

Point Count Name: BB78
UTM:
Start Time 07:43
Habitat:

Species	<50m			<100m			>100m		
	3min	5min	10min	3min	5min	10min	3 min	5min	10min
AMRE	III								
WIWR	1								
ALFL				1					
WTSP				1					1
SWTH	1								
CSWA					1				
BCCH					1				
NOFL						1			

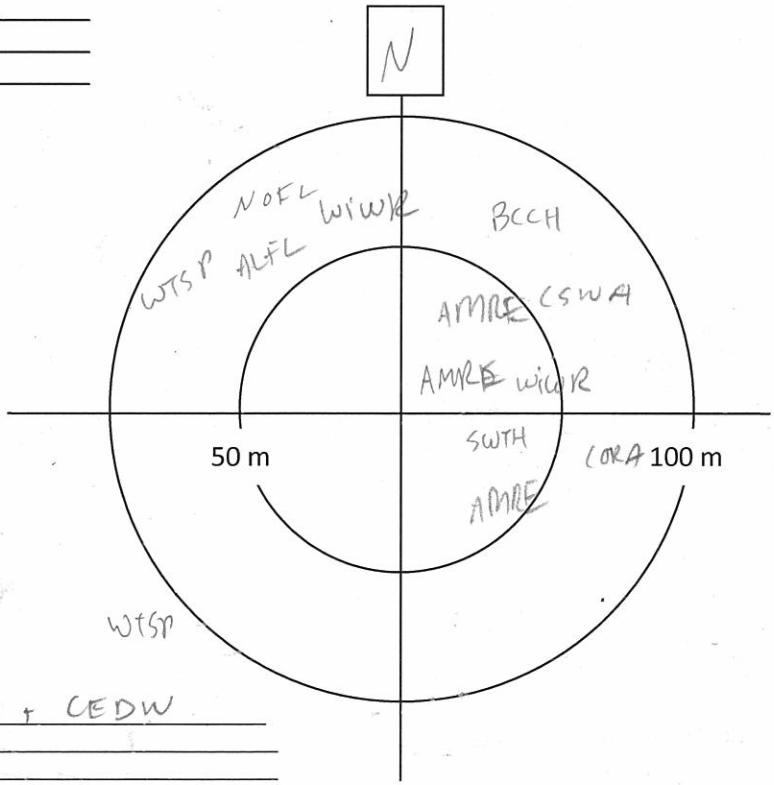

Notes/Incidental observations: en route GRJA + CEDW

Project Number: TC121522
Survey Date: June 8, 2012

AMEC Earth & Environmental
160 Traders Blvd East, Mississauga, ON L4Z 3K7
Tel: (905) 568-2929
Cell: (416) 459-6228
Fax: (905) 568-1686

Point Count Name: BB76
UTM: _____
Start Time 08:07
Habitat: _____

Species	<50m			<100m			>100m		
	3min	5min	10min	3min	5min	10min	3 min	5min	10min
NAWA	1			1	1	1	1		
WTSP	1			1					
BCCH				1			1		
RCKI							1		
MAWA								1	
HETH								1	
BHVI									1
DOWO						1			

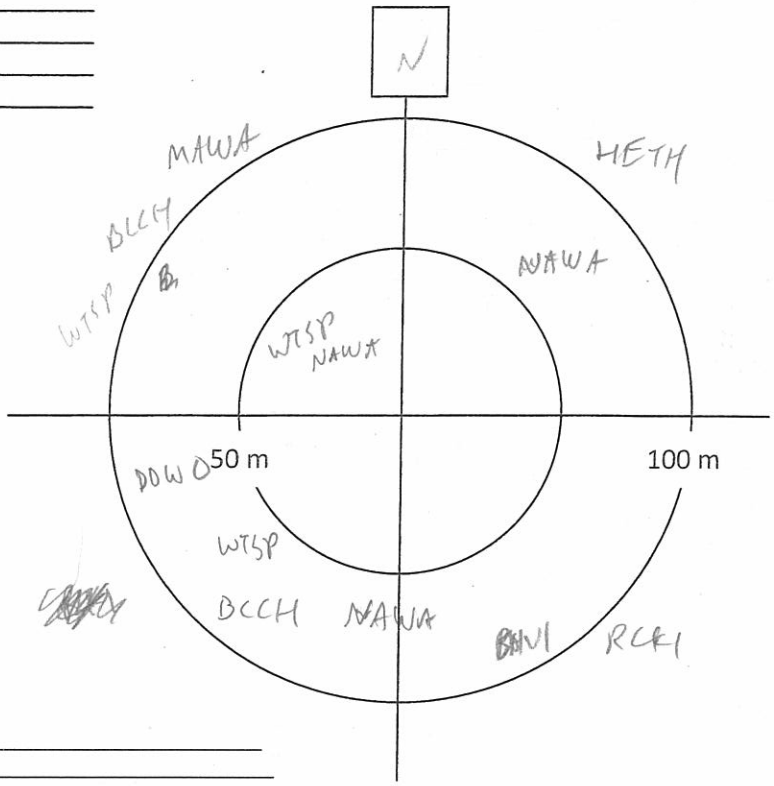

Notes/Incidental observations: _____

Point Count Name: BB75
UTM: _____
Start Time 08:27
Habitat: _____

Species	<50m			<100m			>100m		
	3min	5min	10min	3min	5min	10min	3 min	5min	10min
RCKI				11			1		
COYE	1			1					
ALFL				11					
HETH					11		1		
YBFL				1					
GCKI				1					
YRWA					1				
WTSP						1			1

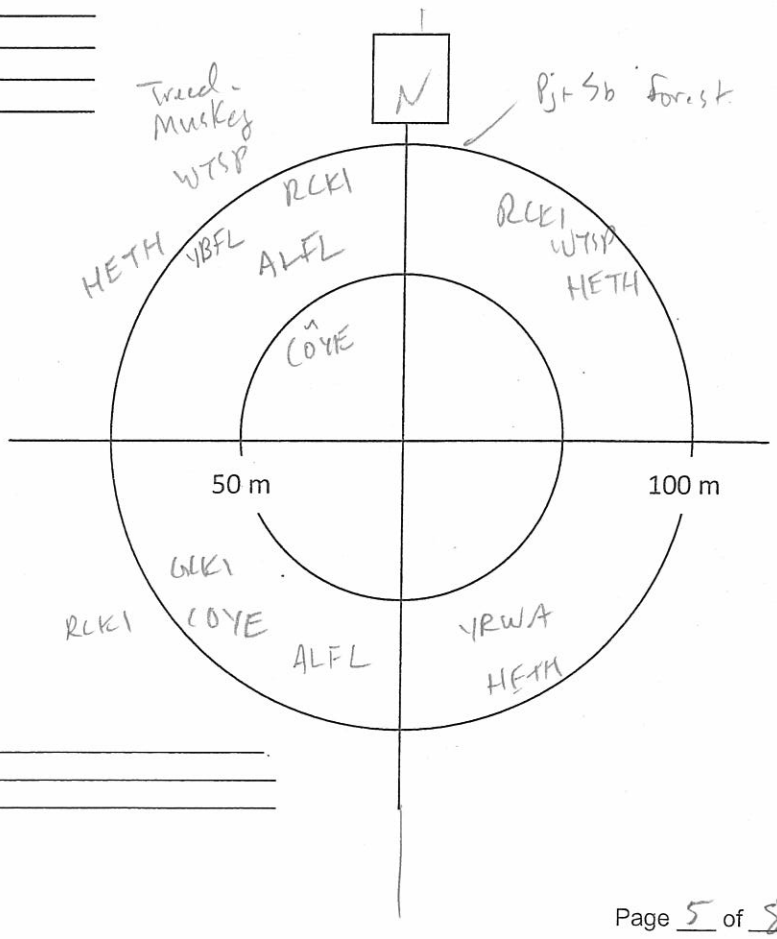

Notes/Incidental observations: _____

Project Number: TC12-522
Survey Date: June 4, 2013

AMEC Earth & Environmental
160 Traders Blvd East, Mississauga, ON L4Z 3K7
Tel: (905) 568-2929
Cell: (416) 459-6228
Fax: (905) 568-1686

Point Count Name: BB73
UTM: _____
Start Time 08:45
Habitat: _____

Species	<50m			<100m			>100m		
	3min	5min	10min	3min	5min	10min	3 min	5min	10min
SWTH				1					
HETH				1					
OVEN				11					
YRWA	11								
YBSA	1								
MAWA				1					
BAWW	1								
BTBW					1				
BHVI					1				
WIWR							1		

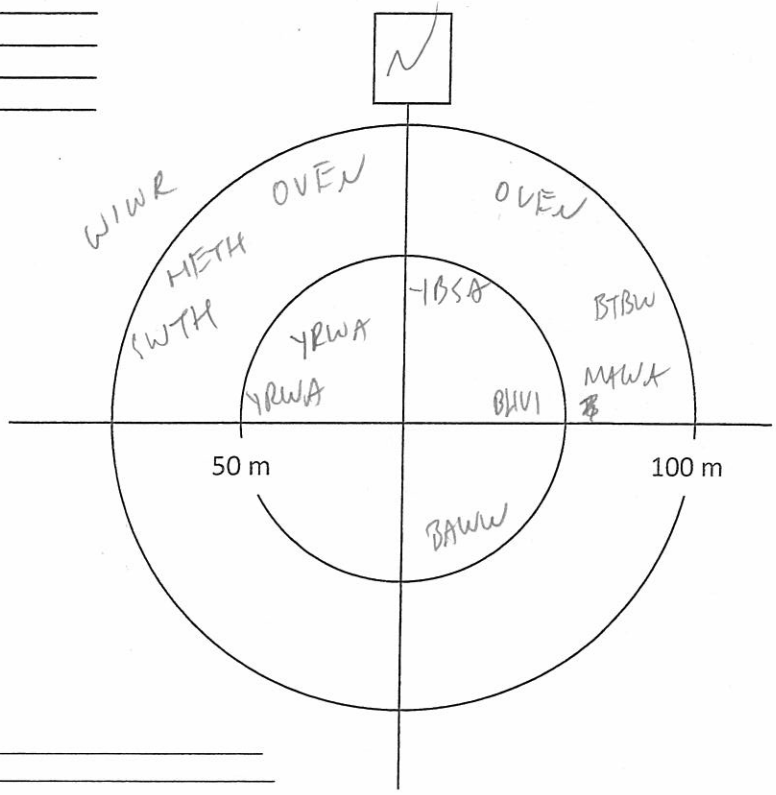

Notes/Incidental observations: _____

Point Count Name: BB72
UTM: _____
Start Time 09:08
Habitat: _____

Species	<50m			<100m			>100m		
	3min	5min	10min	3min	5min	10min	3 min	5min	10min
BAWW	1								
OVEN	1								
BTBW	1								
REVI	1								
MAWA				1					
BLBW	1	1							
BLCH		1							
YRWA						1			

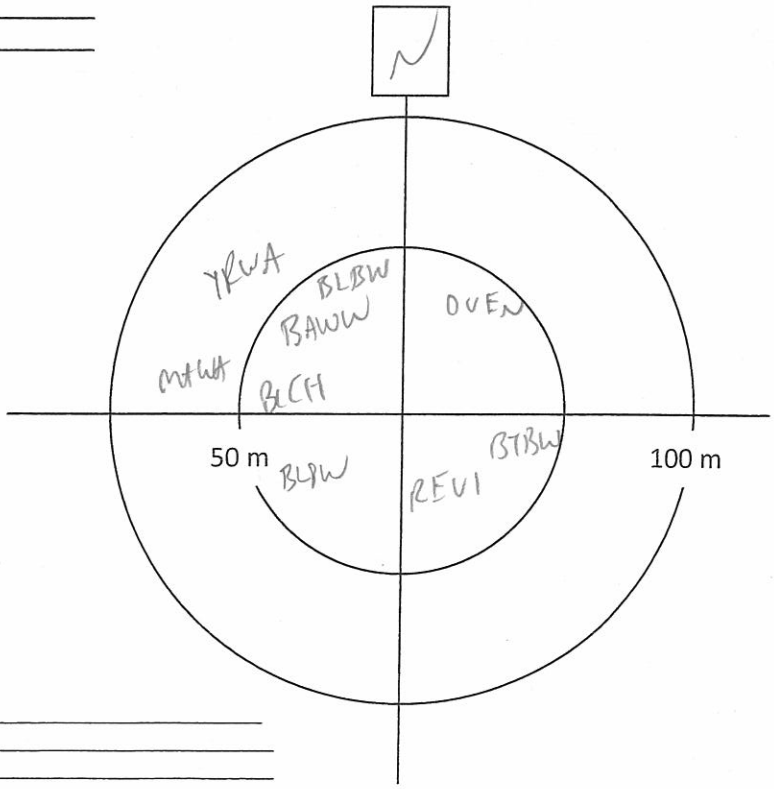

Notes/Incidental observations: _____

Project Number: TC121522
Survey Date: June 8, 2013

AMEC Earth & Environmental
160 Traders Blvd East, Mississauga, ON L4Z 3K7
Tel: (905) 568-2929
Cell: (416) 459-6228
Fax: (905) 568-1686

Point Count Name: BB71
UTM: _____
Start Time 09:29
Habitat: _____

Species	<50m			<100m			>100m		
	3min	5min	10min	3min	5min	10min	3 min	5min	10min
RCKI	1						1		
RBNV				1					
WTSP	1								
NAWA					1		1		
BWHA							1		
BLJA							1		
CMWA	1								
YRWA	1								
ALFL					1				
MAWA						1			

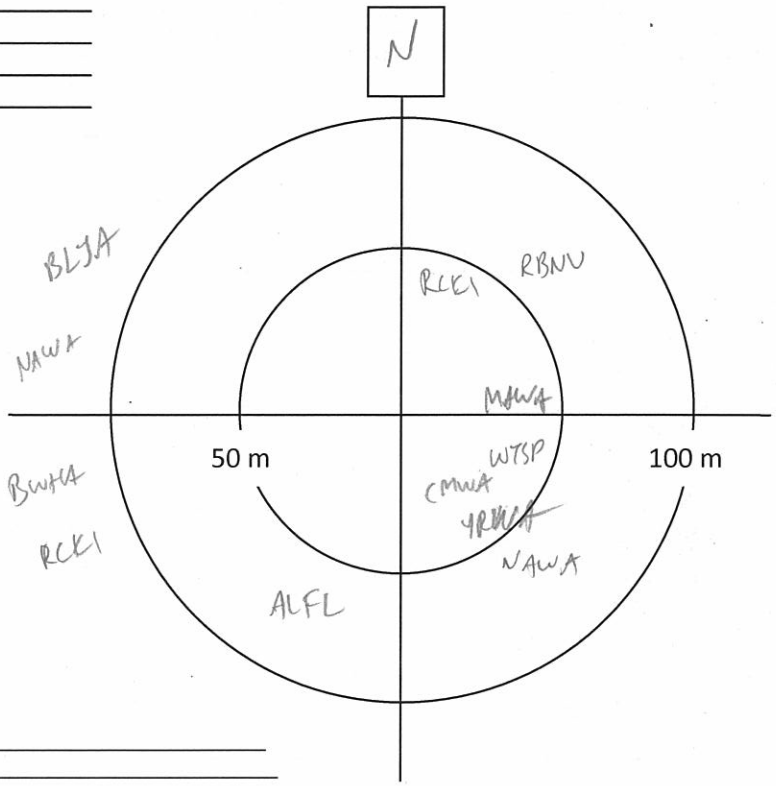

Notes/Incidental observations: _____

Point Count Name: _____
UTM: _____
Start Time _____
Habitat: _____

Species	<50m			<100m			>100m		
	3min	5min	10min	3min	5min	10min	3 min	5min	10min

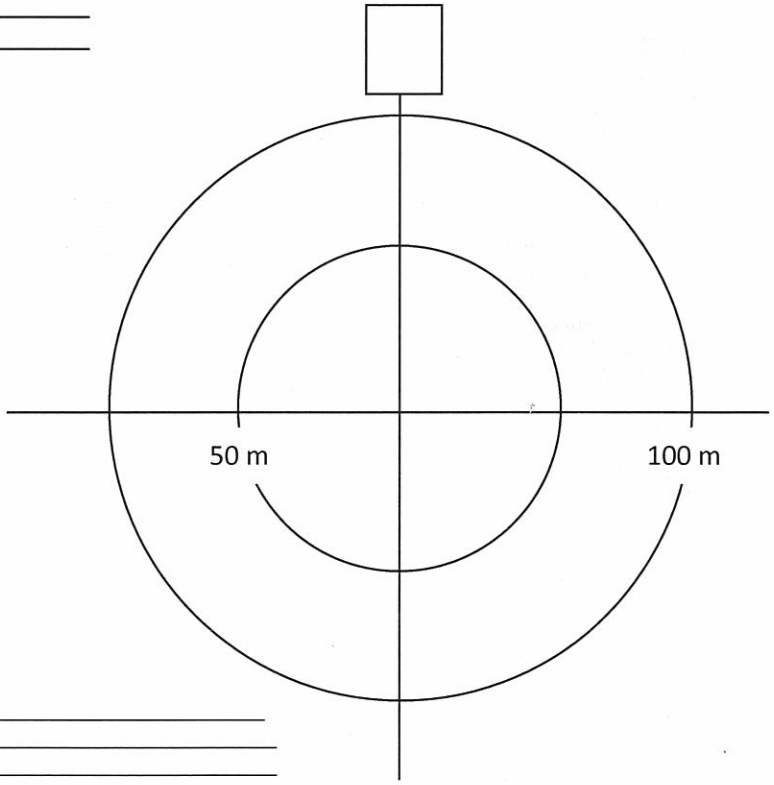

Notes/Incidental observations: _____

Project Number: TC121522
Survey Date: June 4, 2013

AMEC Earth & Environmental
160 Traders Blvd East, Mississauga, ON L4Z 3K7
Tel: (905) 568-2929
Cell: (416) 459-6228
Fax: (905) 568-1686

Other Wildlife Observations **Species at Risk

Obs?	Species	Waypoint	Notes
	Virginia Opossum		
	Shrew sp		
	Star-nosed Mole		
	Bat Sp.		
	Eastern Cottontail		
Y	Snowshoe Hare		
	European Hare		
	Eastern Chipmunk		
	Woodchuck		
	Grey Squirrel		
Y	Red Squirrel		
	Flying Squirrel sp		
	Beaver		
	Mouse sp		
	Muskrat		
	Meadow Vole		
	Porcupine		
	Coyote		
	Grey Wolf		
	Red Fox		
	Black Bear		
	Raccoon		
	Mink		
	Striped Skunk		
	White-tailed Deer		
	Moose		
	Snapping Turtle**		
	Midland Painted Turtle		
	Western Painted Turtle		
	Northern Map Turtle**		
	Blanding's Turtle**		
	Eastern Gartersnake		
	East. Ribbon Snake**		
	Northern Watersnake		
	Redbelly Snake		
	Brown Snake		
	Smooth Greensnake		
	Ringneck Snake		
	Eastern Milksnake**		
	Red-spotted Newt		
	Bl.-spotted Salamander		
	Spotted Salamander		
	Four-toed Salamander		
	Northern Redback		
	American Toad		
	Western Chorus Frog**		
	Boreal Chorus Frog		
Y	Spring Peeper		
	Gray Treefrog		
	Bullfrog*		
	Northern Green Frog		
	Wood Frog		
	Northern Leopard Frog		
	Mink Frog		

Other Species	Waypoint	Notes

AMEC Earth & Environmental
160 Traders Blvd East, Mississauga, ON L4Z 3K7
Tel: (905) 568-2929
Cell: (416) 459-6228
Fax: (905) 568-1686

Breeding Bird Point Count Survey

Project Name: IAMGOLD		**Project Number:** T121522	
Crew Leader: JP	**Observers:** Jon Pleizier		
Date: June 7, 2013	**Start Time (24hr):** 05:25	**End Time (24hr):** 11:00	
Weather: Clear - 0% cloud	**Temperature:**	**Wind:** 3	**Precipitation (Circle):** (0 None) 1 Haze/Fog 2 Drizzle 3 Rain

Point Count Name: BB168
UTM:
Start Time 05:35
Habitat: Birch dominated

Species	<50m			<100m			>100m		
	3min	5min	10min	3min	5min	10min	3 min	5min	10min
REVI				1		1			
OVEN	11						11		
BTBW	1								
RUGR				1					
BTNW	1								
YBSA									
COLO							1		
BCCH					1				
SWTH						11			

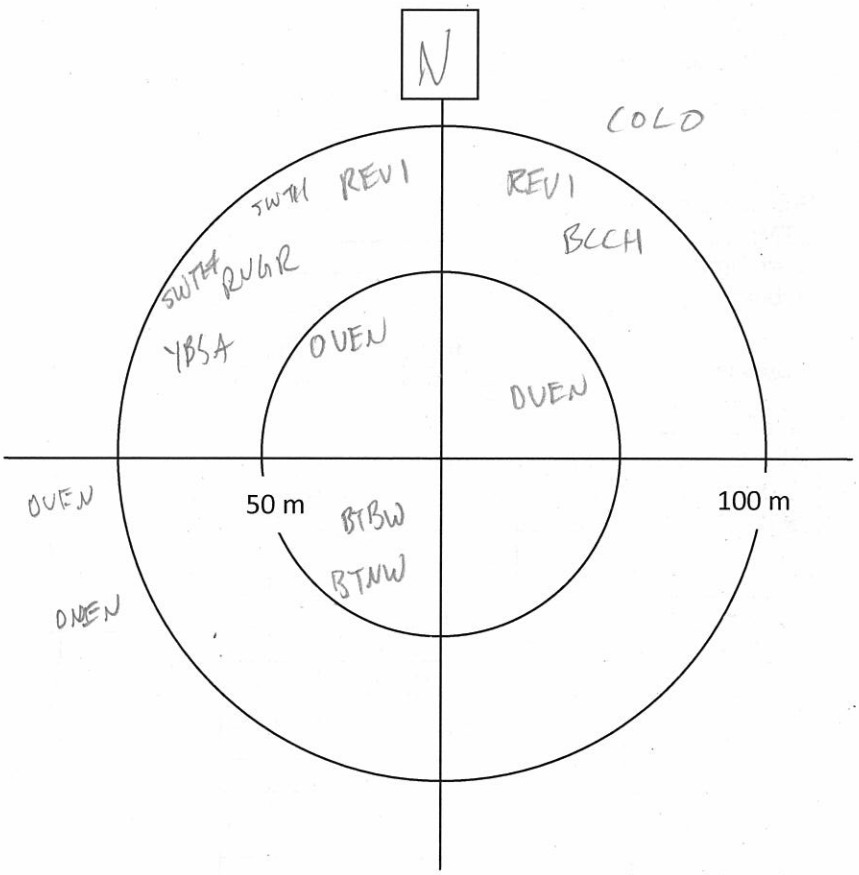

Notes/Incidental observations: en route LEFL

Project Number: 7C121522
Survey Date: June 9, 2013

AMEC Earth & Environmental
160 Traders Blvd East, Mississauga, ON L4Z 3K7
Tel: (905) 568-2929
Cell: (416) 459-6228
Fax: (905) 568-1686

Point Count Name: BB167
UTM: _____
Start Time 05:54
Habitat: Birch Forest w 3b.

Species	<50m			<100m			>100m		
	3min	5min	10min	3min	5min	10min	3 min	5min	10min
BCCH	1								
OVEN	1			1					1
REVI	1			1					
SWTH				1				1	1
YBSA				1		1			
BLBW	1								
4									

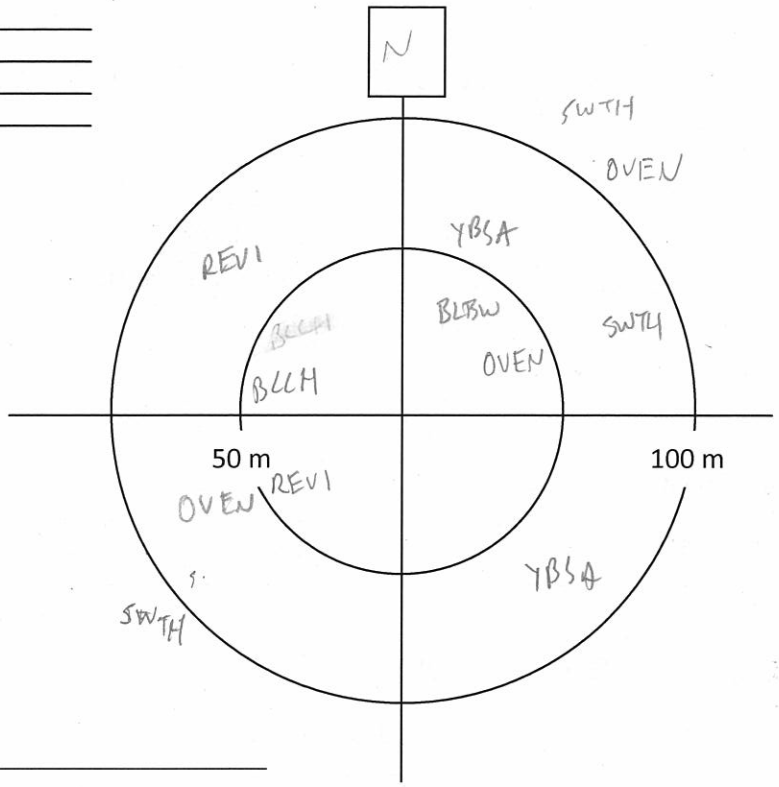

Notes/Incidental observations: _____

Point Count Name: BB162
UTM: _____
Start Time 06:02
Habitat: _____

Species	<50m			<100m			>100m		
	3min	5min	10min	3min	5min	10min	3 min	5min	10min
OVEN	1			1					
REVI	1							1	
YBSA				1					
GCKI				1					
RBNU				1					
SWTH							1		
NORA					1				
BTNW						11			1

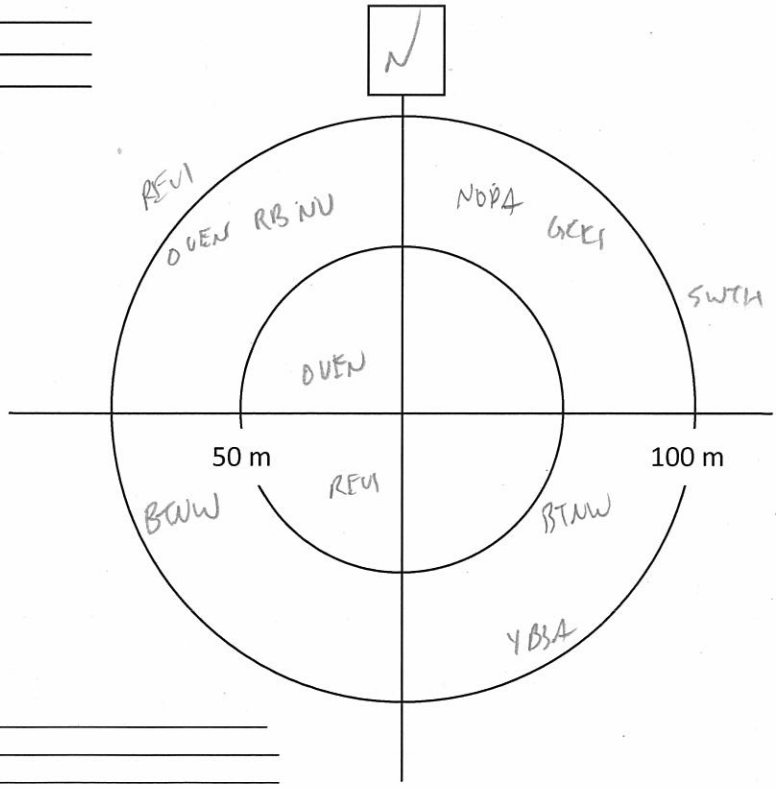

Notes/Incidental observations: _____

Project Number: TCI21522
Survey Date: June 9, 2013

AMEC Earth & Environmental
160 Traders Blvd East, Mississauga, ON L4Z 3K7
Tel: (905) 568-2929
Cell: (416) 459-6228
Fax: (905) 568-1686

Point Count Name: BB156
UTM:
Start Time 06:35
Habitat: Aspen dom.

Species	<50m			<100m			>100m		
	3min	5min	10min	3min	5min	10min	3 min	5min	10min
OVEN	III			I					
REVI				I					
RBNU					I				
BLBW	I								
BLJA				I					

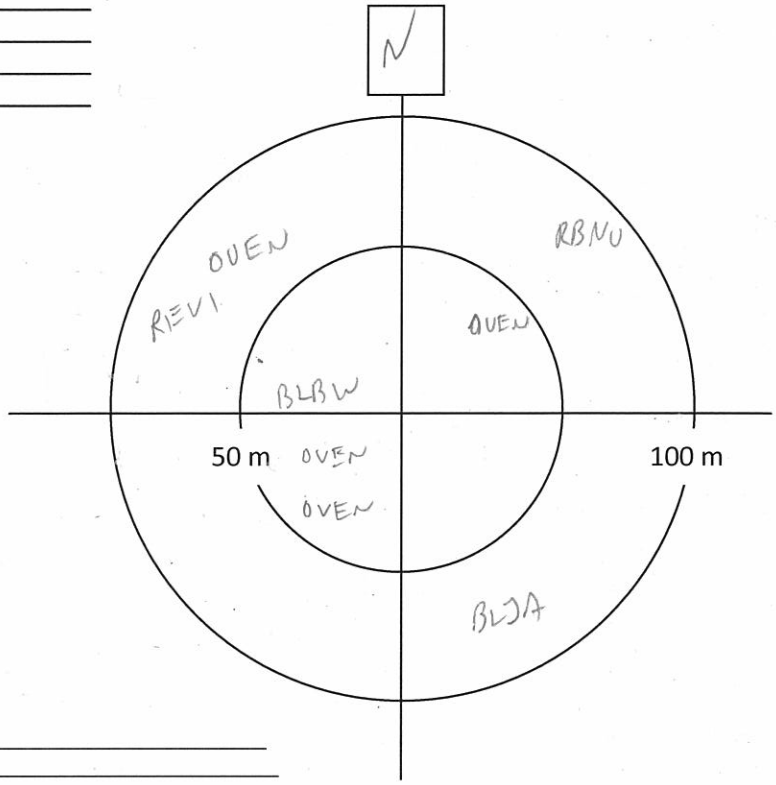

Notes/Incidental observations: RESQ

Point Count Name: BB
UTM:
Start Time 06:58
Habitat:

Species	<50m			<100m			>100m		
	3min	5min	10min	3min	5min	10min	3 min	5min	10min
CAWA	I								
OVEN	I			I					
BTNW				II					
WIWR				I					
YBSA				I					
BTBW				I					
REVI							I		
NAWA				I					

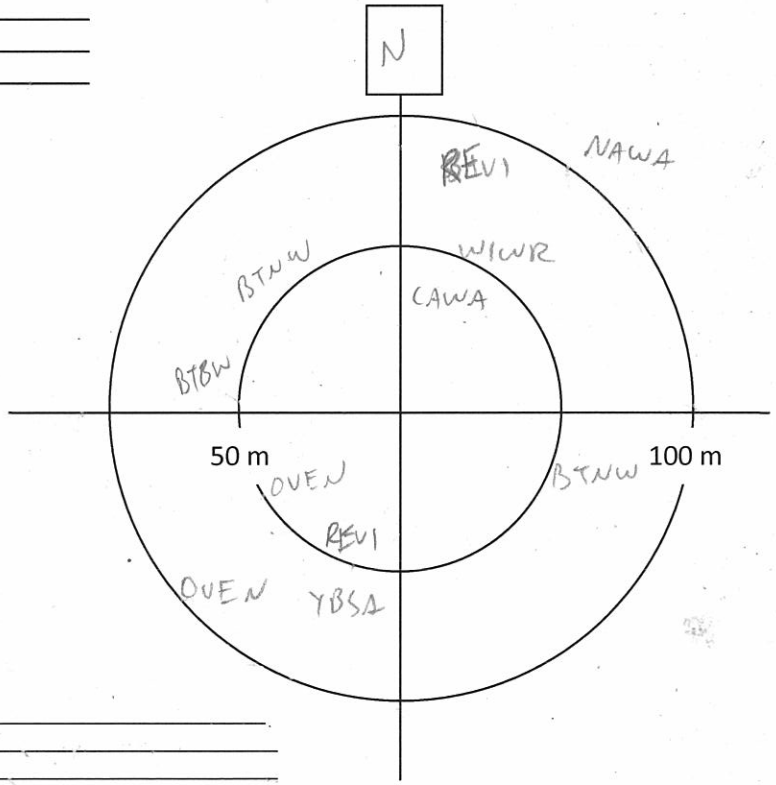

Notes/Incidental observations:

Project Number: TC121572
Survey Date: June 9, 2013

AMEC Earth & Environmental
160 Traders Blvd East, Mississauga, ON L4Z 3K7
Tel: (905) 568-2929
Cell: (416) 459-6228
Fax: (905) 568-1686

Point Count Name: BB157
UTM:
Start Time 07:18
Habitat: Birch / Aspen mixed

Species	<50m			<100m			>100m		
	3min	5min	10min	3min	5min	10min	3 min	5min	10min
MAWA	1			1					
MAWA	1			1		1			
REVI	1			1					
SWTH				1					
BLBW	1								
BRCR				1					
WTSP							1		
BLJA						1			
OVEN						1			
NOPA						1			

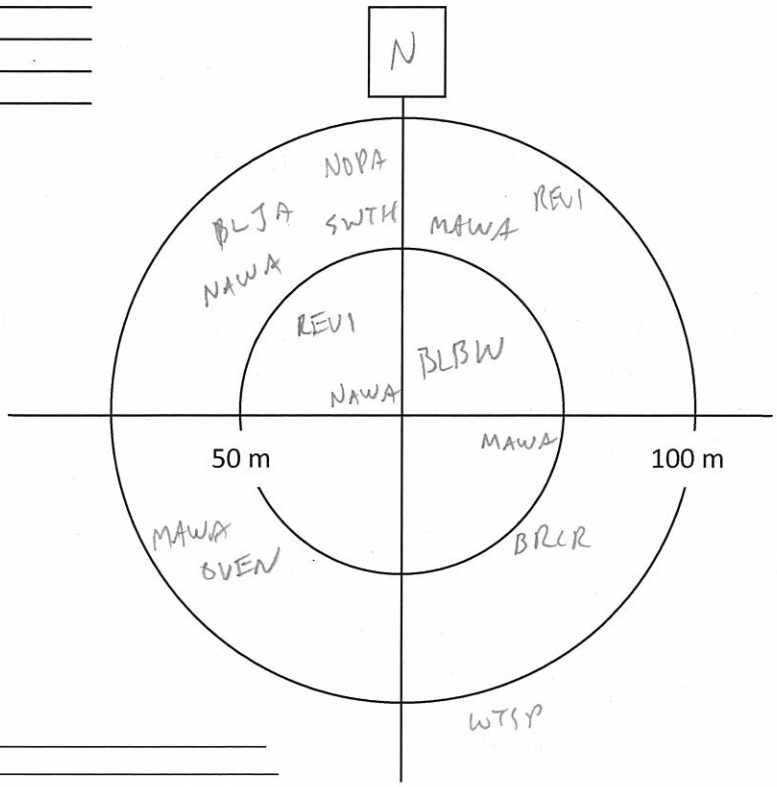

Notes/Incidental observations:

Point Count Name: BB154
UTM:
Start Time 07:39
Habitat: Aspen + SB/BF

Species	<50m			<100m			>100m		
	3min	5min	10min	3min	5min	10min	3 min	5min	10min
MAWA	1								
OVEN	11			111					
REVI			1						1
BLCH				1					
LEFL					1				
YBSA					1				
GCKI					1				
BHVI									

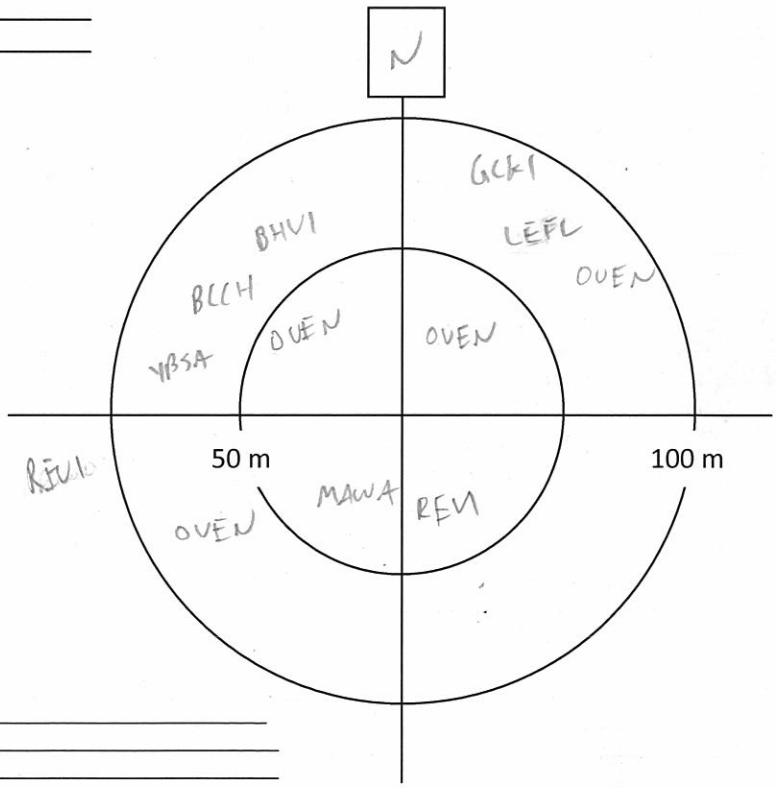

Notes/Incidental observations: RESQ

Project Number: TC121522
Survey Date: June 9, 2017

AMEC Earth & Environmental
160 Traders Blvd East, Mississauga, ON L4Z 3K7
Tel: (905) 568-2929
Cell: (416) 459-6228
Fax: (905) 568-1686

Point Count Name: BB156
UTM: _____
Start Time 05:02
Habitat: Birch, Sw, Ab. Maple/heated hazel.

Species	<50m			<100m			>100m		
	3min	5min	10min	3min	5min	10min	3 min	5min	10min
RBNU	1			1					
BLBW	1			1					
CMWA	1								
NOPA				1					
NAWA	1								
SWTH	1			11					
YBSA				1					
MAWA					11				
WIWR					1				
OVEN			1		1				
RUGR						1			
BCCH			1						

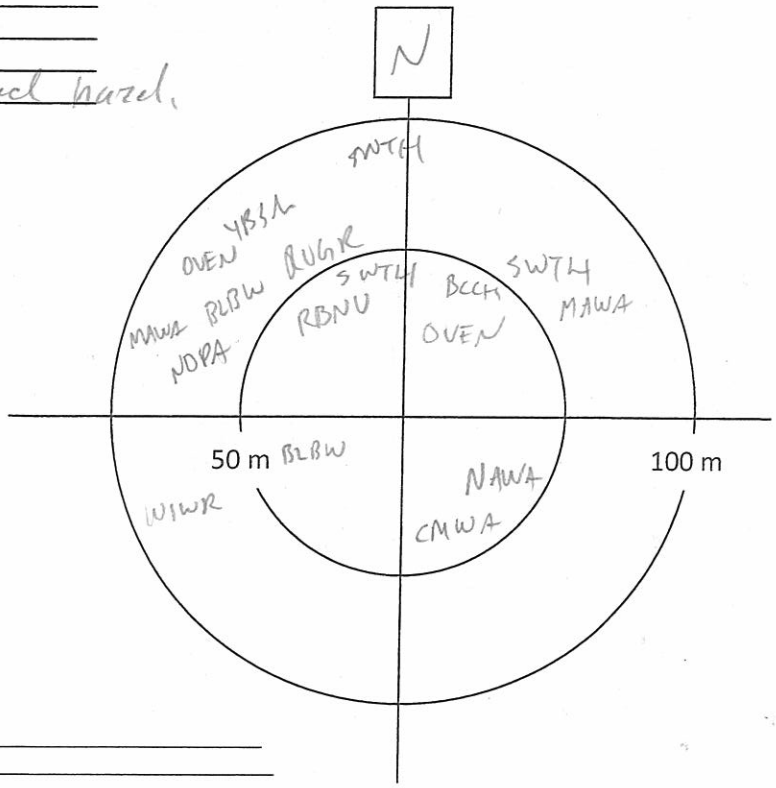

Notes/Incidental observations: RESQ
en route BBWA

Point Count Name: BB158
UTM: _____
Start Time 05:26
Habitat: _____

Species	<50m			<100m			>100m		
	3min	5min	10min	3min	5min	10min	3 min	5min	10min
REVI	1					1			
RBNU				1					
WIWR	1								
BTBW	1								
OVEN	1					1			
SCTA				1					
RUGR				1					
LEFL	1								
VEERY									1

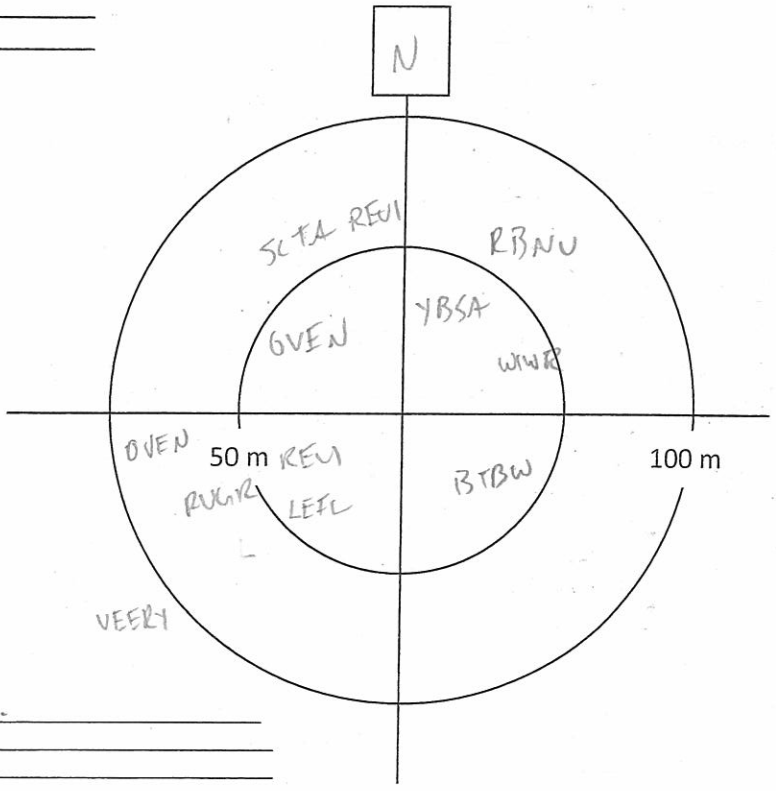

Notes/Incidental observations: CMWA en route.

Project Number: TC121522
Survey Date: June 9, 2013

AMEC Earth & Environmental
160 Traders Blvd East, Mississauga, ON L4Z 3K7
Tel: (905) 568-2929
Cell: (416) 459-6228
Fax: (905) 568-1686

Point Count Name: BB161
UTM: _____
Start Time 08:52
Habitat: Poplar dominated w dense MM understory

Species	<50m			<100m			>100m		
	3min	5min	10min	3min	5min	10min	3 min	5min	10min
REVI	1			1	1				
LEFL					1				
OVEN						1			
DOWO			1						
YBFL			1						
BLBW						1			
PIWO									1

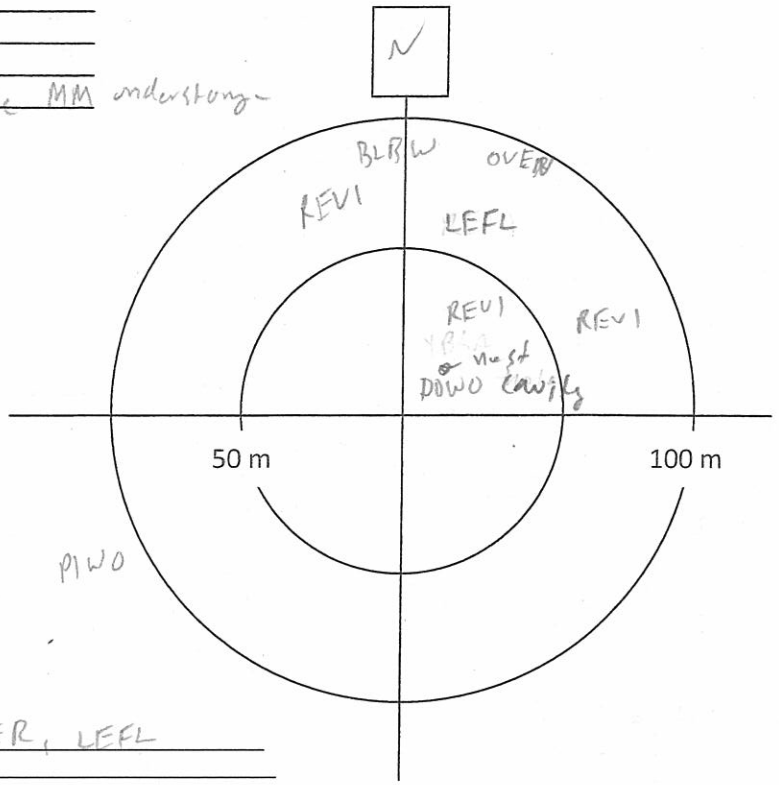

Notes/Incidental observations: en route - VEER, LEFL

Point Count Name: BB163
UTM: _____
Start Time 09:19
Habitat: _____

Species	<50m			<100m			>100m		
	3min	5min	10min	3min	5min	10min	3 min	5min	10min
RBNU	1								
WTSP				1					
CAWA				1					
OVEN	1						1		
REVI	1			1					
BTBW				1					
VEER				1	1				
MAWA				1					
BLJA			1						

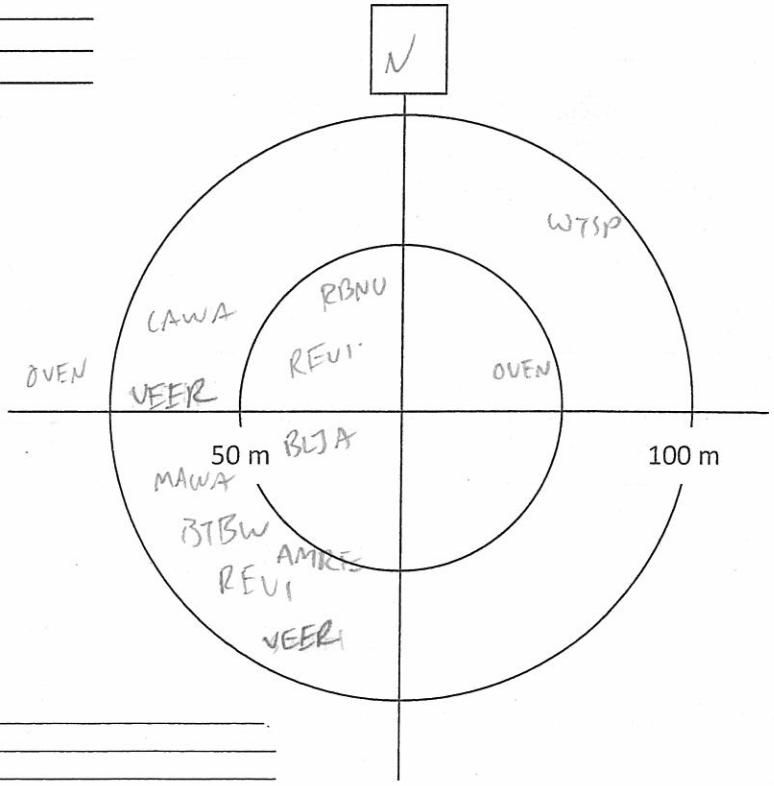

Notes/Incidental observations: _____

Project Number: TC121522
Survey Date: June 9, 2013

AMEC Earth & Environmental
160 Traders Blvd East, Mississauga, ON L4Z 3K7
Tel: (905) 568-2929
Cell: (416) 459-6228
Fax: (905) 568-1686

Point Count Name: BB164
UTM: _____
Start Time 09:45
Habitat: Aspen / Birch

Species	<50m			<100m			>100m		
	3min	5min	10min	3min	5min	10min	3 min	5min	10min
REVI				1					
RUGR				1					
BTNW				1					
VEER				1					
DOWO						1			
OVEN				1		1			1

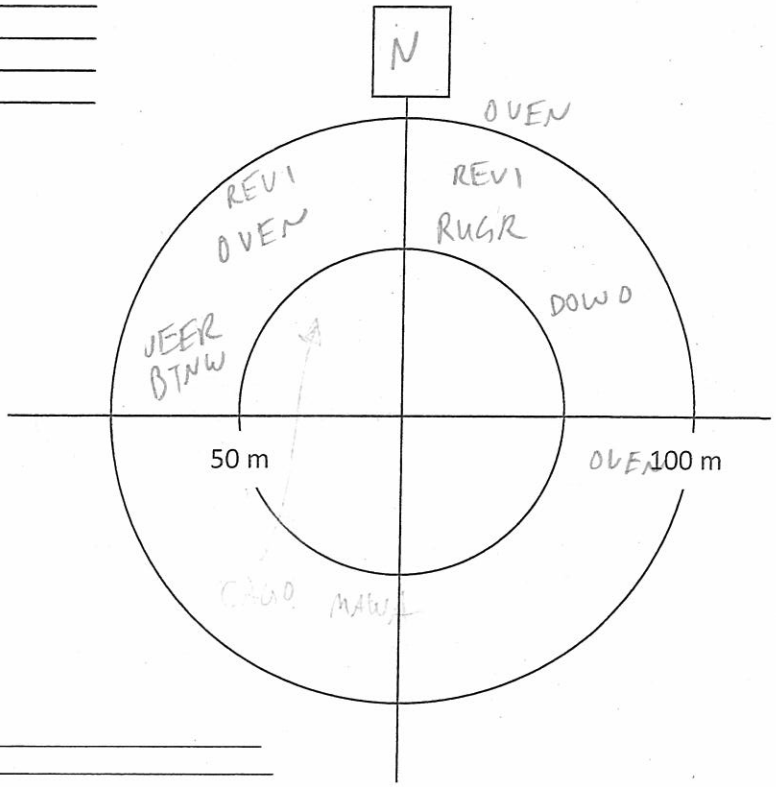

Notes/Incidental observations: _____

Point Count Name: BB165
UTM: _____
Start Time 10:10
Habitat: Birch / balsam

Species	<50m			<100m			>100m		
	3min	5min	10min	3min	5min	10min	3 min	5min	10min
BAWW	1								
OVEN	1								
SWTH				1			1		
MAWA				1					
BTNW						1			
MAWA		•	1						

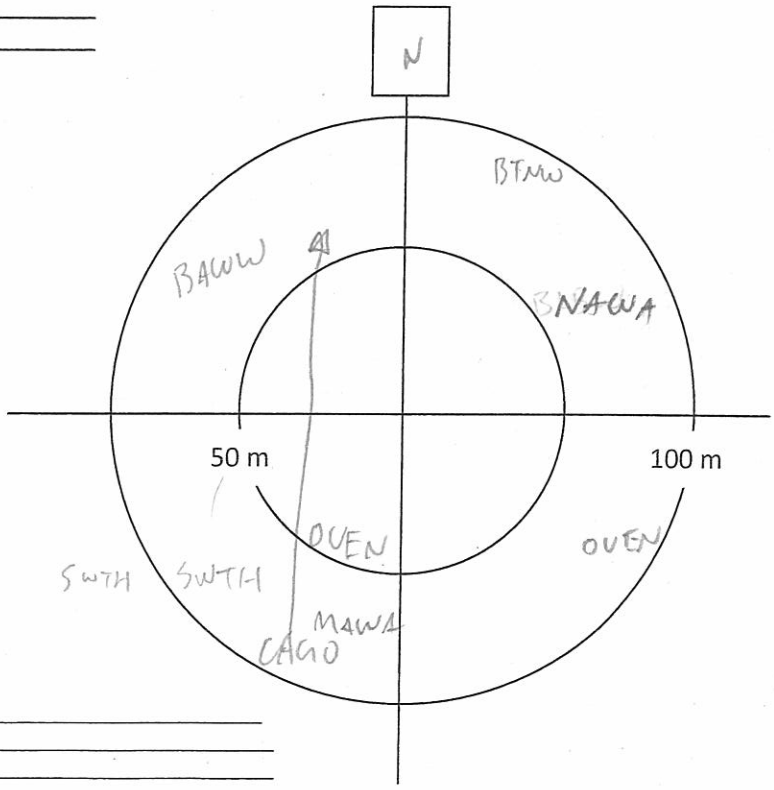

Notes/Incidental observations: RESQ

Project Number: TC121522
Survey Date: June 9, 2013

AMEC Earth & Environmental
160 Traders Blvd East, Mississauga, ON L4Z 3K7
Tel: (905) 568-2929
Cell: (416) 459-6228
Fax: (905) 568-1686

Point Count Name: BB16
UTM: _____
Start Time 10:35
Habitat: _____

Species	<50m			<100m			>100m		
	3min	5min	10min	3min	5min	10min	3 min	5min	10min
MAWA	1					1			
RBNU				1					
BLBW		1							
BTNW					1	1			
RUGR						1			
AMRE						1			

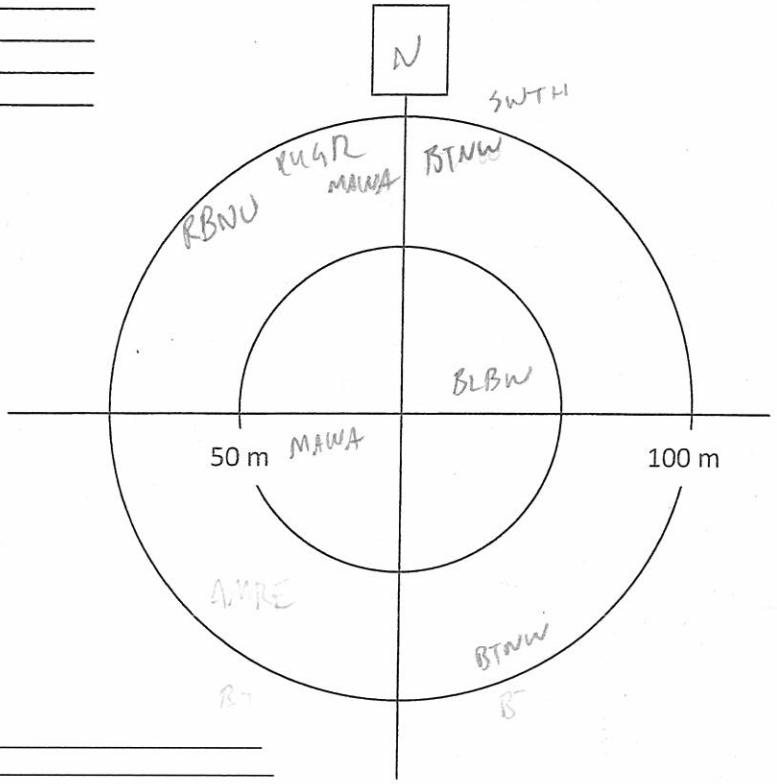

Notes/Incidental observations: _____

Point Count Name: _____
UTM: _____
Start Time _____
Habitat: _____

Species	<50m			<100m			>100m		
	3min	5min	10min	3min	5min	10min	3 min	5min	10min

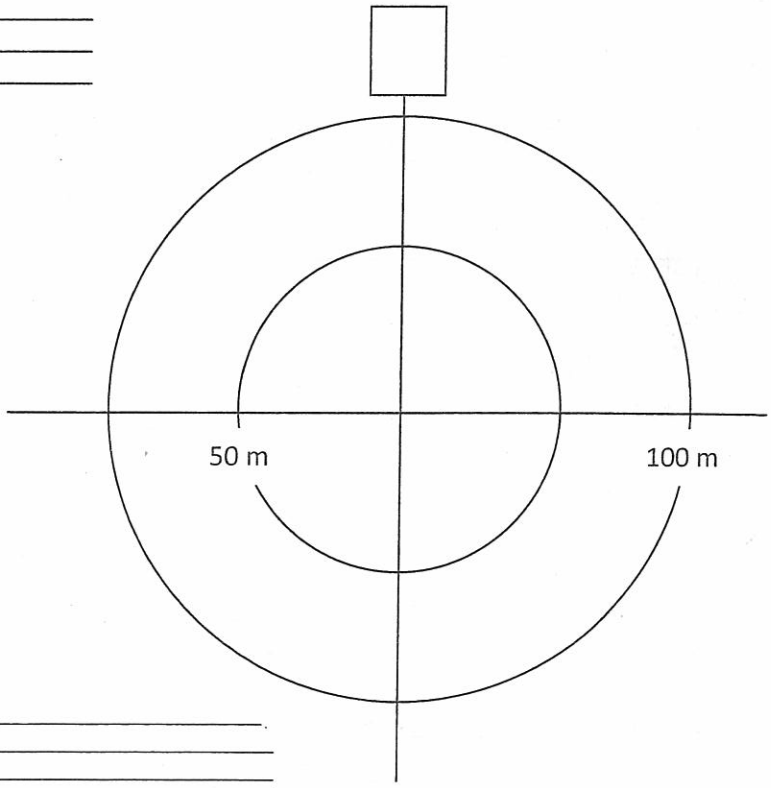

Notes/Incidental observations: _____

AMEC Earth & Environmental
160 Traders Blvd East, Mississauga, ON L4Z 3K7
Tel: (905) 568-2929
Cell: (416) 459-6228
Fax: (905) 568-1686

Breeding Bird Point Count Survey

Project Name: IAMGOLD		**Project Number:** TC121522	
Crew Leader:	**Observers:** Jon Pelletier		
Date: June 10, 2013	**Start Time (24hr):** 05:30	**End Time (24hr):**	
Weather:	**Temperature:**	**Wind:** 1	**Precipitation (Circle):** 0 None 1 Haze/Fog 2 Drizzle 3 Rain

on route - BARR

Point Count Name: BB125
UTM: 42 (E411417)
Start Time 05:38
Habitat: Jack Pine dominated.

Species	<50m			<100m			>100m		
	3min	5min	10min	3min	5min	10min	3 min	5min	10min
NAWA	III			I					
YBSA									
COLO							I		
GCKI			I						
BLJA						I			

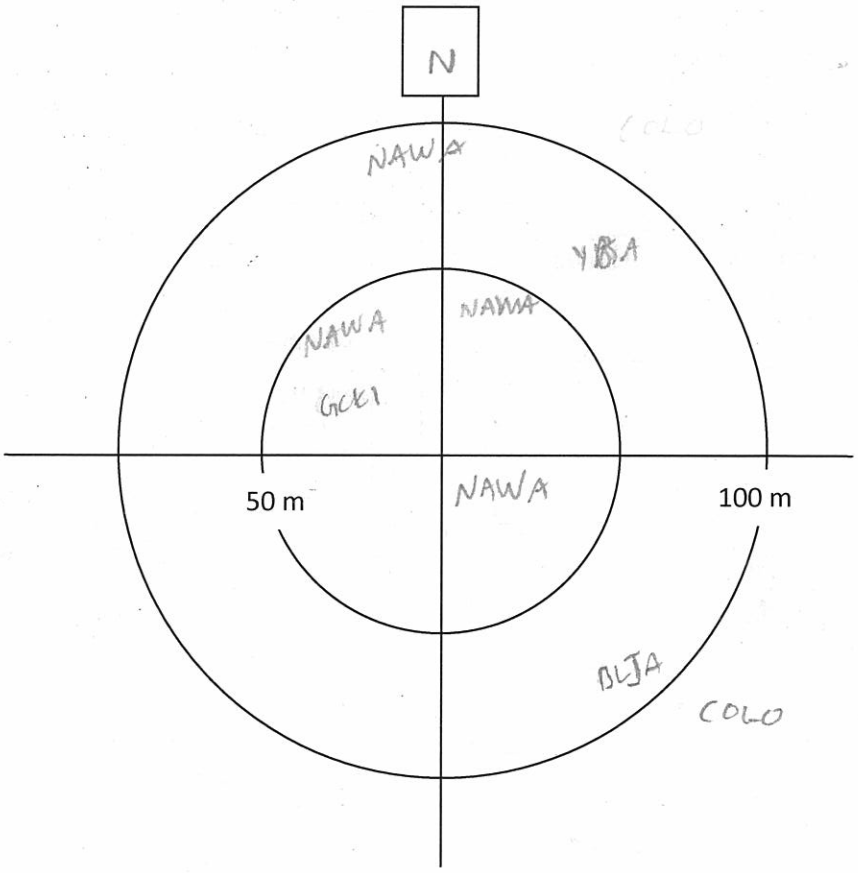

Notes/Incidental observations:

Project Number: TC121522
Survey Date: June 10, 2013

AMEC Earth & Environmental
160 Traders Blvd East, Mississauga, ON L4Z 3K7
Tel: (905) 568-2929
Cell: (416) 459-6228
Fax: (905) 568-1686

Point Count Name: BB126
UTM: 054 (E414)
Start Time 05:54
Habitat: Jack Pine

Species	<50m			<100m			>100m		
	3min	5min	10min	3min	5min	10min	3 min	5min	10min
BLVI	1								
NAWA	1				1				
BLBW				1					
CHSP	1				1				
GLKI	1								
SWTH				1					
WTSP					1				1
BLJA									1
OVEN									1
BRCR						1			

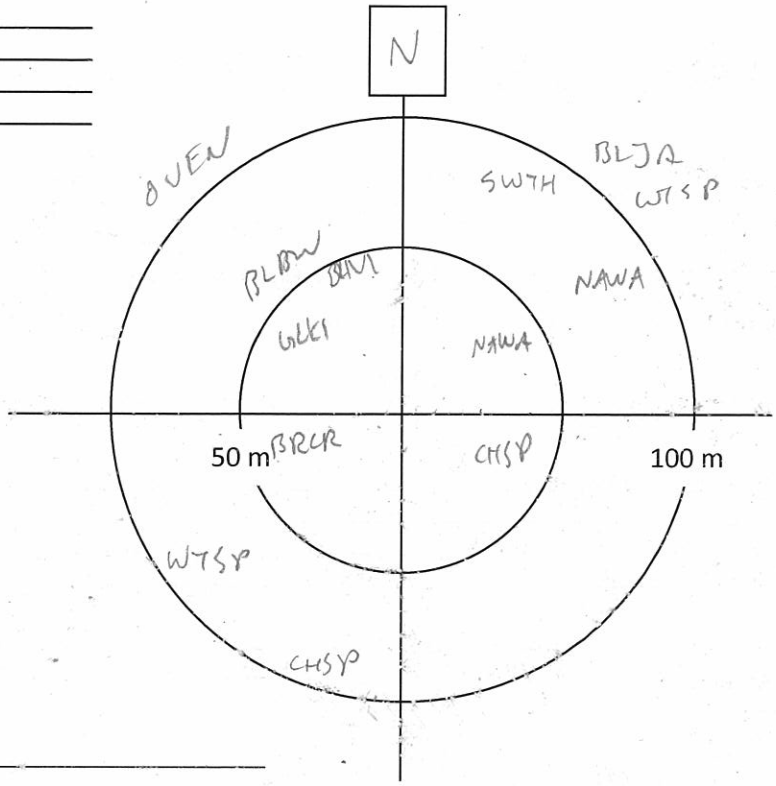

Notes/Incidental observations:

Point Count Name: BB127
UTM: 053 (E414)
Start Time 06:17
Habitat:

Species	<50m			<100m			>100m		
	3min	5min	10min	3min	5min	10min	3 min	5min	10min
RCKI	1			1					1
NAWA	1			1					
WTSP				1		1			
SWTH				1					
YBFL					1				
YBSA						1			
RBNU			1						
SWSP									1

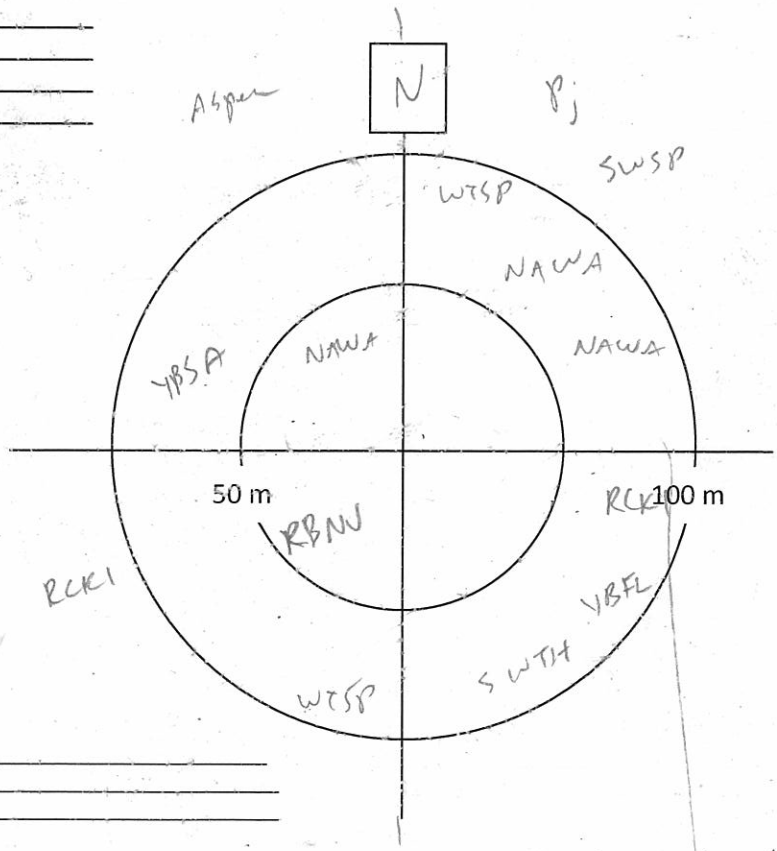

Notes/Incidental observations:

Project Number: TC121522
Survey Date: June 10, 2013

AMEC Earth & Environmental
160 Traders Blvd East, Mississauga, ON L4Z 3K7
Tel: (905) 568-2929
Cell: (416) 459-6228
Fax: (905) 568-1686

Point Count Name: BB129
UTM: 050 - (EHIH)
Start Time 06:39
Habitat:

Species	<50m			<100m			>100m		
	3min	5min	10min	3min	5min	10min	3 min	5min	10min
SWTH				1		1			
OVEN				1					
YRWA	1			1					
MAWA	1		1						
YBFL				11					
REVI				1					
RCKI				1					
GCKI		1							
BHVI		1							
MOWA			1						

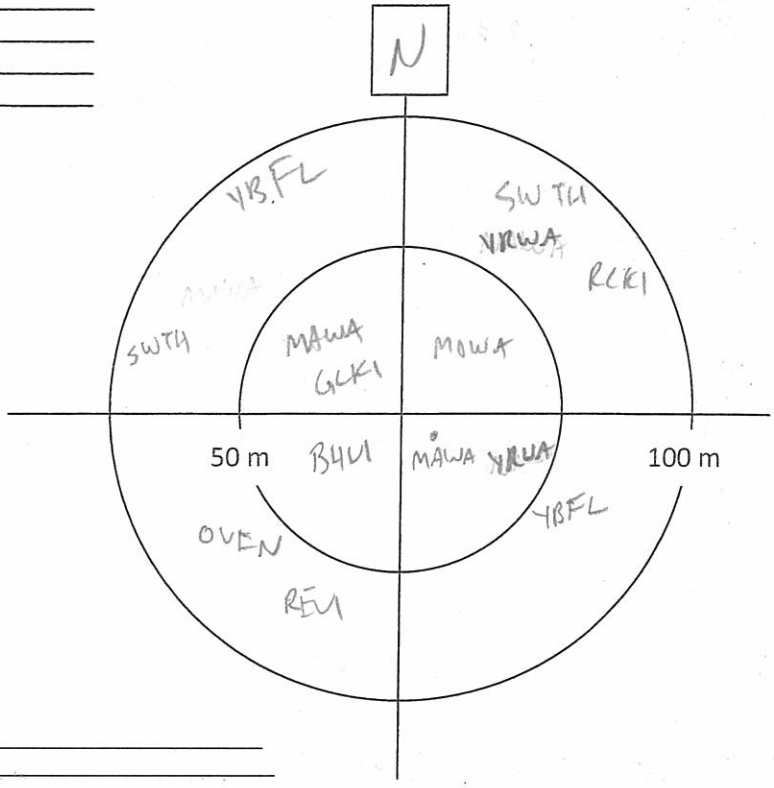

Notes/Incidental observations:

Point Count Name: BB130
UTM:
Start Time 07:02
Habitat:

Species	<50m			<100m			>100m		
	3min	5min	10min	3min	5min	10min	3 min	5min	10min
HETH				1					
SWTH				11					
COYE	1								
SWSP	1								
WIWR				1					
NAWA	1								
ALFL				1					
MAWA	11								
CSWA	1								
WTSP	1			1					1
YBFL					1	1			
BRCR		1							
REVI									1
TEWA			1			1			
DOWO			1						
BEKI									

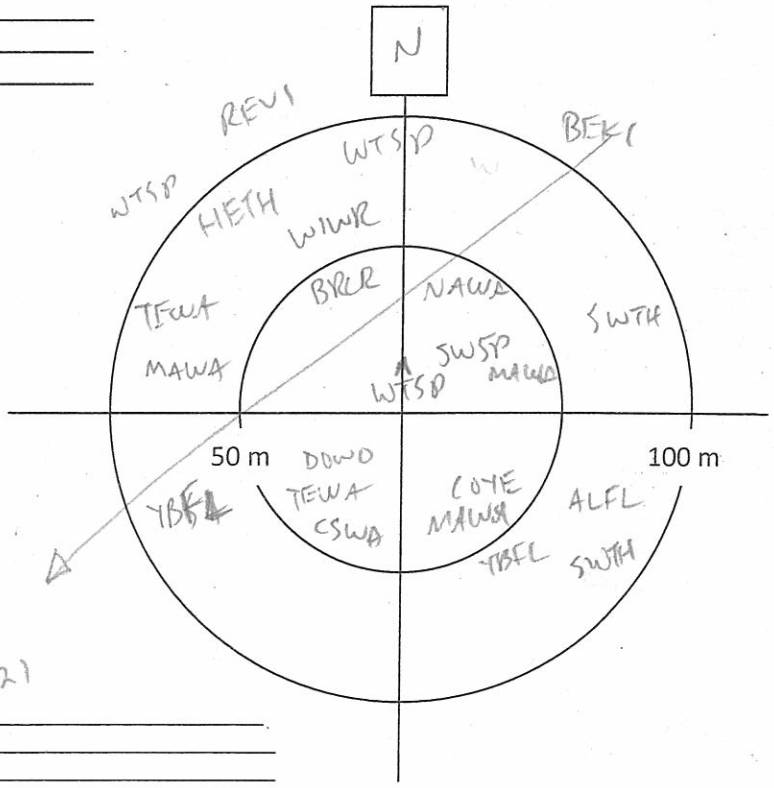

MAS0(2)

Notes/Incidental observations: RESQ

Project Number: TC121522
Survey Date: June 10, 2013

AMEC Earth & Environmental
160 Traders Blvd East, Mississauga, ON L4Z 3K7
Tel: (905) 568-2929
Cell: (416) 459-6228
Fax: (905) 568-1686

Point Count Name: BB130
UTM: 047
Start Time 07:28
Habitat: Alder/brush

Species	<50m			<100m			>100m		
	3min	5min	10min	3min	5min	10min	3 min	5min	10min
WTSP	1			III					
RCKI	1			II					
GCKI	1								
ALFL	1								
NAWA	1			III		1			
MAWA	II								
SWTH				II					
COYE				1					
NOWA	1								
RUGR	1								
UNWO					1				
YBFL			1						

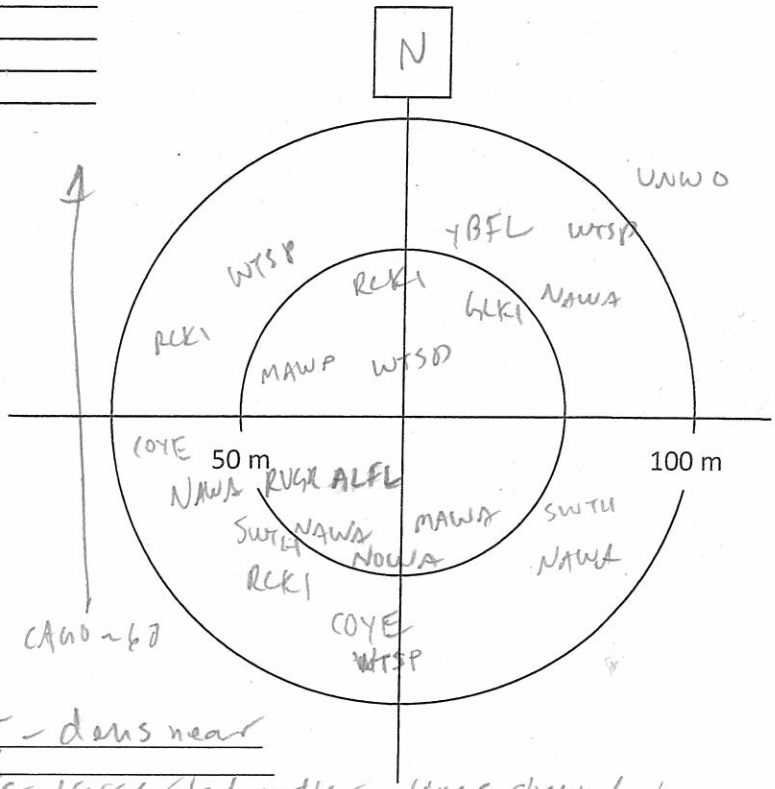

Notes/Incidental observations: enroute - wpt 135 - dens near bank of stream - mink?
- moose browse - lots of droppings - large shed antler - tines chewed by rodents

Point Count Name: BB131
UTM: 046 (FH14)
Start Time 04:04
Habitat:

Species	<50m			<100m			>100m		
	3min	5min	10min	3min	5min	10min	3 min	5min	10min
NAWA	1			1					
OVEN	1			1					
SWTH				1					
WTSP							1		
COYE							1		

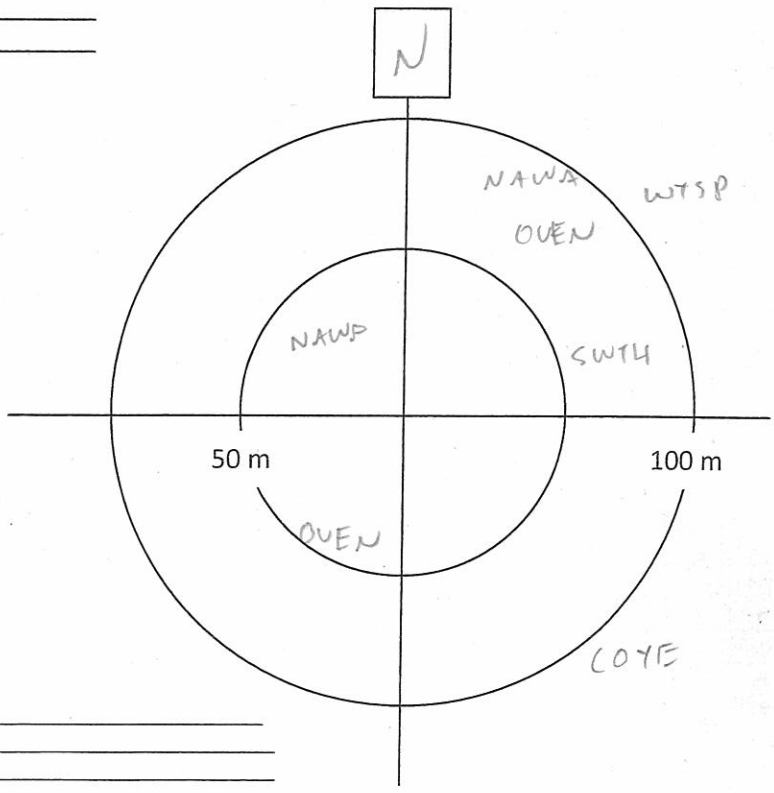

Notes/Incidental observations:

Project Number: TC121522
Survey Date: June 10, 2017

AMEC Earth & Environmental
160 Traders Blvd East, Mississauga, ON L4Z 3K7
Tel: (905) 568-2929
Cell: (416) 459-6228
Fax: (905) 568-1686

Point Count Name: BB 132
UTM: _____
Start Time 0421 (EDT)
Habitat: 08:28 – Spruce / larch swamp

Species	<50m			<100m			>100m		
	3min	5min	10min	3min	5min	10min	3 min	5min	10min
NAWA	1			11					
WTSP	1						1		
RCKI	1								
AMCR							1		
ENGR									
DEJU									

fo

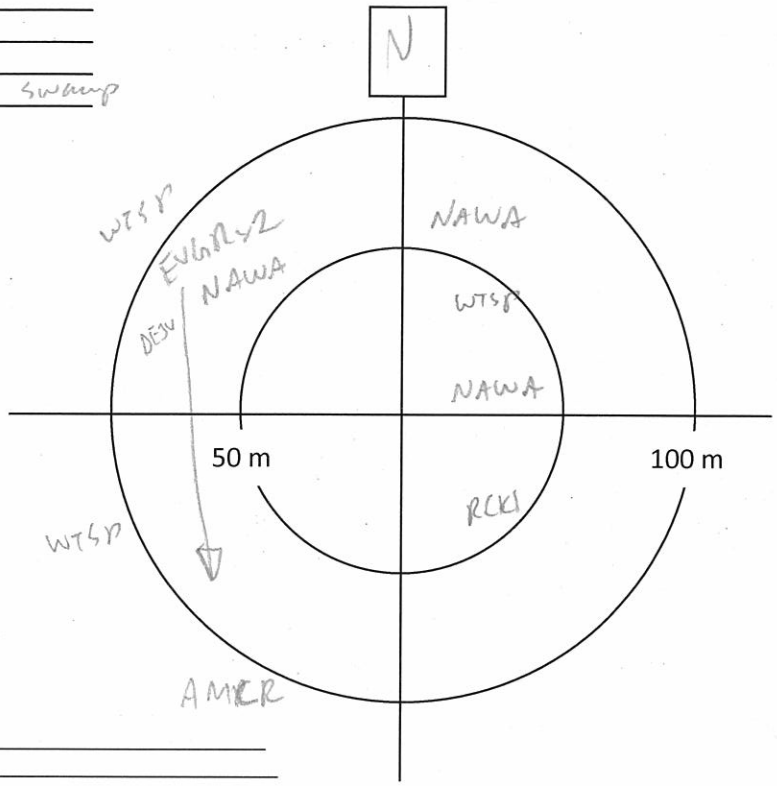

Notes/Incidental observations: _____

Point Count Name: BB133
UTM: _____
Start Time 0445
Habitat: _____

Species	<50m			<100m			>100m		
	3min	5min	10min	3min	5min	10min	3 min	5min	10min
WTSP				11			1		
NAWA									
YBFL	1								
LCKI	1								
REVI				1					
SWTH									
BAWW		1							

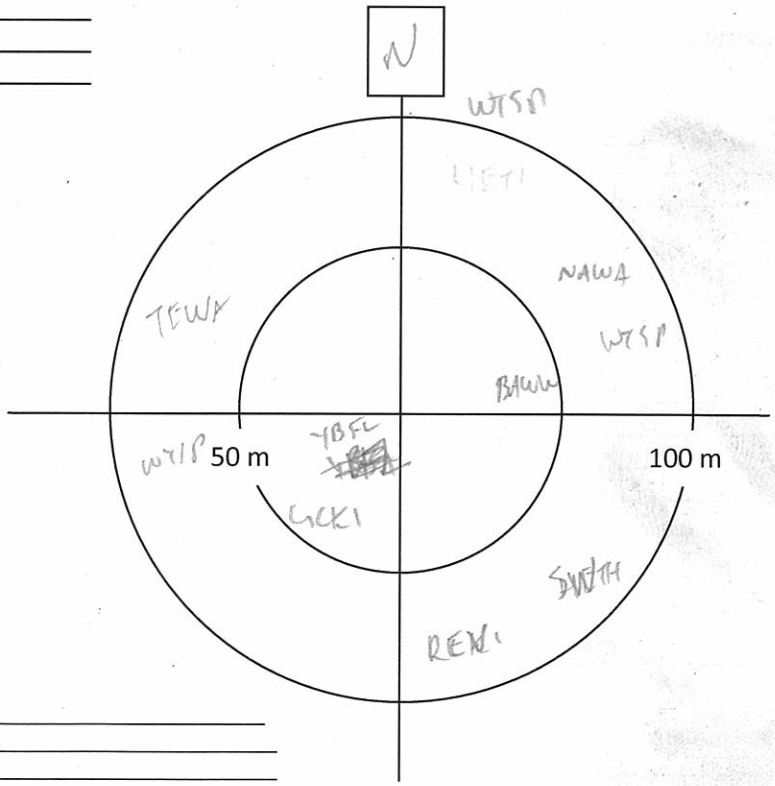

Notes/Incidental observations: _____

Project Number: TC121522
Survey Date: June 9, 2013

AMEC Earth & Environmental
160 Traders Blvd East, Mississauga, ON L4Z 3K7
Tel: (905) 568-2929
Cell: (416) 459-6228
Fax: (905) 568-1686

Point Count Name: 134
UTM: 040
Start Time 09:05
Habitat:

Species	<50m			<100m			>100m		
	3min	5min	10min	3min	5min	10min	3 min	5min	10min
NOPA	1								
BTBW	1								
MAWA	11								
REVI	11								
OVEN			1	11					
CSWA	111								
RUGR		1							
MAWA			1						
AMRE			1						
BLBW			1						

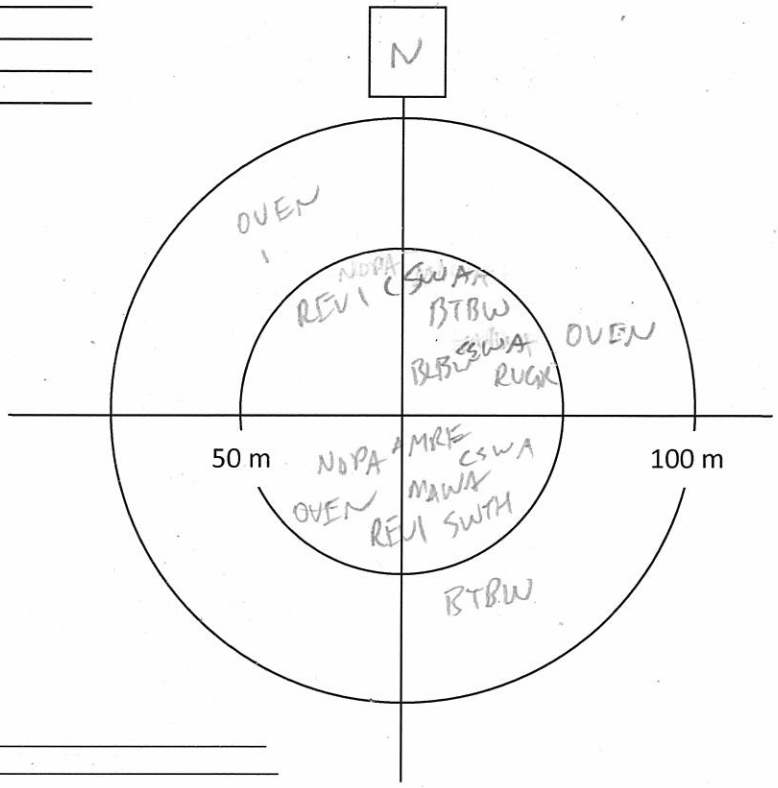

Notes/Incidental observations:

Point Count Name: 135
UTM: 039
Start Time 09:25
Habitat:

Species	<50m			<100m			>100m		
	3min	5min	10min	3min	5min	10min	3 min	5min	10min
OVEN				1					
SWTH				1			1		
REVI				1	1				
MAWA				11					
WIWR				1					
WTSP							1		
RBNU				1		1			
HETH						1			

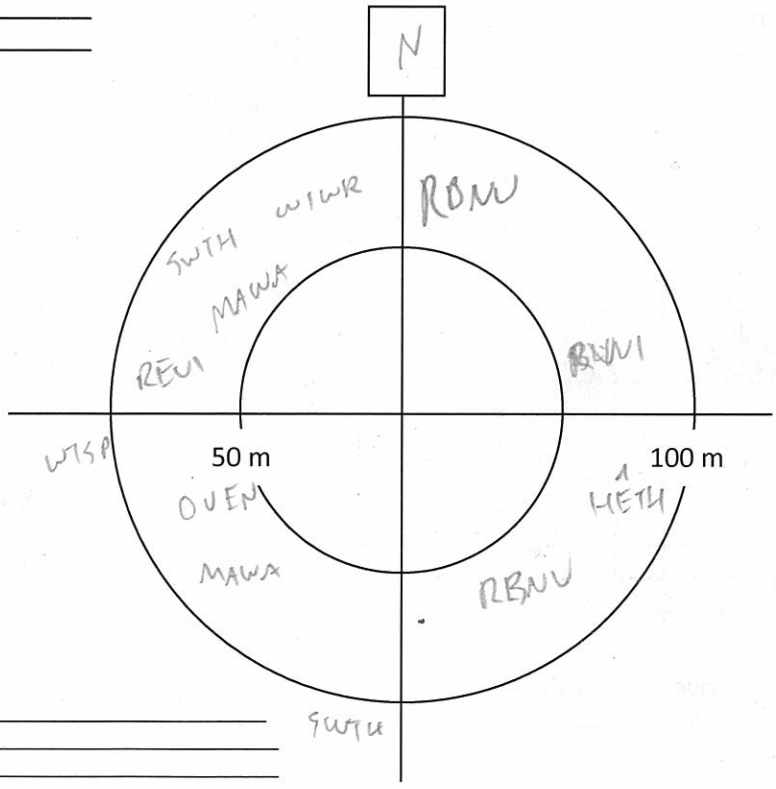

Notes/Incidental observations: RESQ

AMEC Earth & Environmental
160 Traders Blvd East, Mississauga, ON L4Z 3K7
Tel: (905) 568-2929
Cell: (416) 459-6228
Fax: (905) 568-1686

Breeding Bird Point Count Survey

Project Name: IMG mine		**Project Number:** Map 13 points 139-153	
Crew Leader: Jon Pliezier	**Observers:** Sarah Mainguy		
Date: 10 June 13	**Start Time (24hr):** 0530	**End Time (24hr):** 1215	
Weather: cloudy with sunny periods	**Temperature:** 12°C ↑	**Wind:** 0 (picked up to 2 at end)	**Precipitation (Circle):** (0) None 1 Haze/Fog 2 Drizzle 3 Rain

Point Count Name: _____
UTM: _____
Start Time _____
Habitat: _____

Species	<50m			<100m			>100m		
	3min	5min	10min	3min	5min	10min	3 min	5min	10min

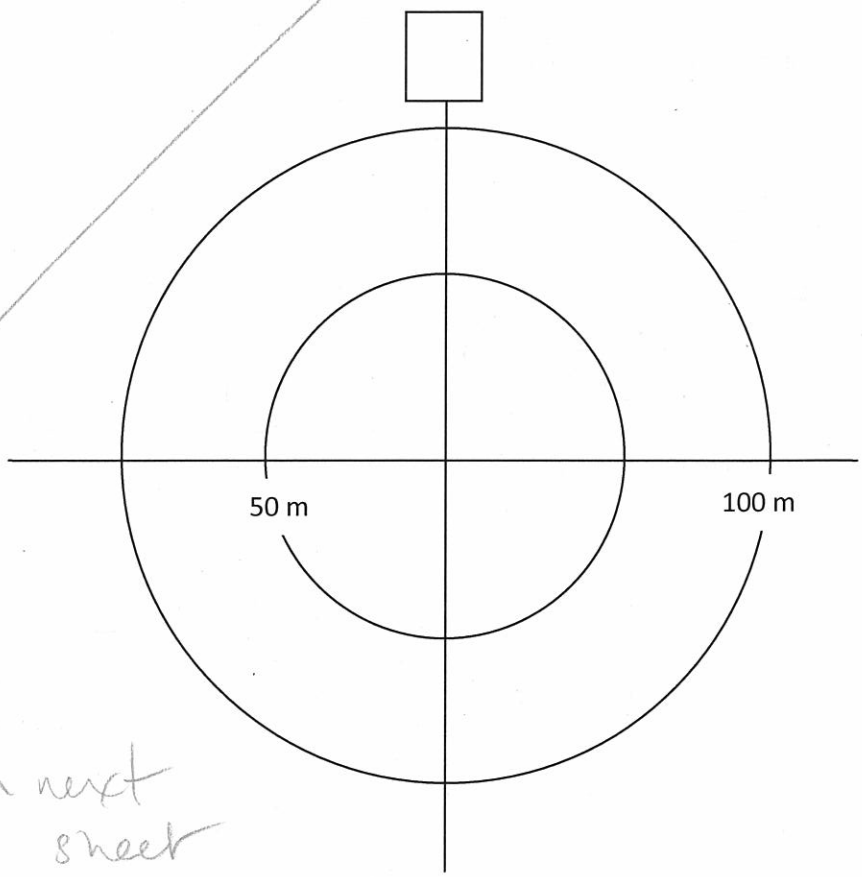

Starts on next sheet

Notes/Incidental observations: _____
_____
_____

Project Number: TC121522
Survey Date: June 10, 2013

AMEC Earth & Environmental
160 Traders Blvd East, Mississauga, ON L4Z 3K7
Tel: (905) 568-2929
Cell: (416) 459-6228
Fax: (905) 568-1686

Point Count Name: _____
UTM: _____
Start Time _____
Habitat: _____

Species	<50m			<100m			>100m		
	3min	5min	10min	3min	5min	10min	3 min	5min	10min

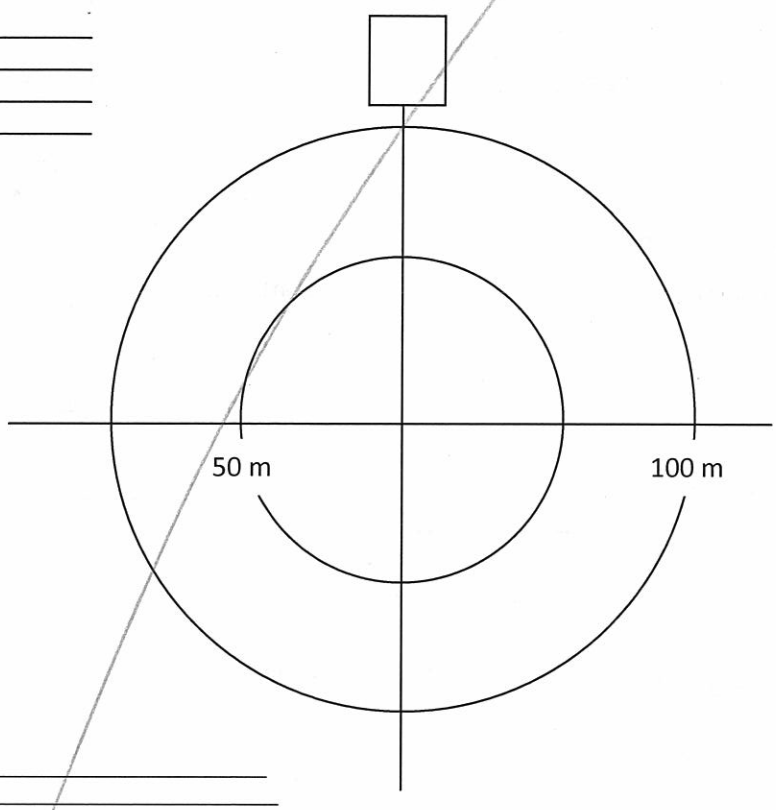

Notes/Incidental observations: _____

Point Count Name: _____
UTM: _____
Start Time _____
Habitat: _____

Species	<50m			<100m			>100m		
	3min	5min	10min	3min	5min	10min	3 min	5min	10min

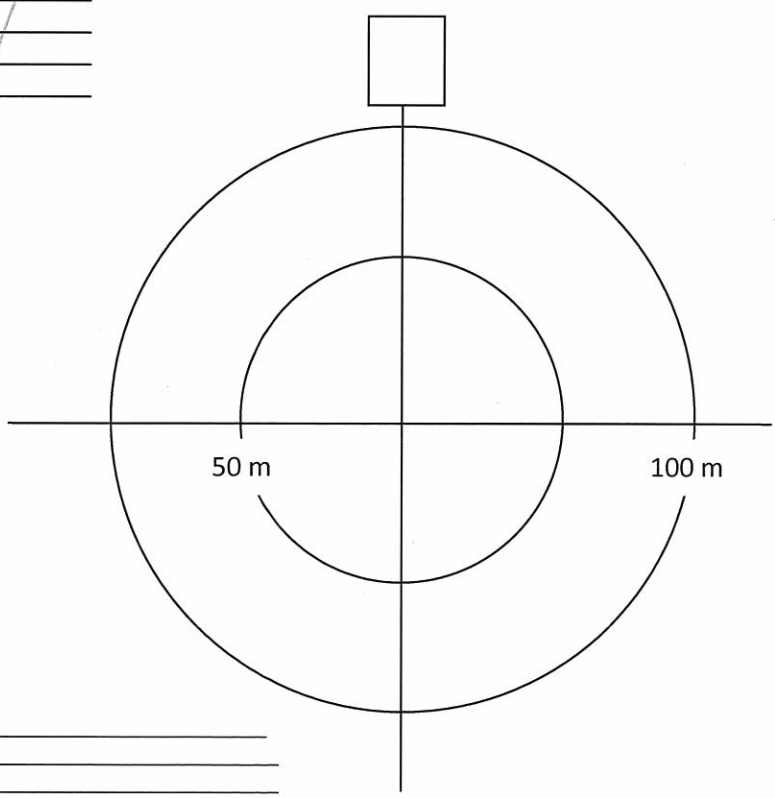

Notes/Incidental observations: _____

Project Number: 7C121522
Survey Date: June 10, 2013

AMEC Earth & Environmental
160 Traders Blvd East, Mississauga, ON L4Z 3K7
Tel: (905) 568-2929
Cell: (416) 459-6228
Fax: (905) 568-1686

Point Count Name: BB145
UTM:
Start Time 0535
Habitat: clear cut / conifer swamp

Species	<50m			<100m			>100m		
	3min	5min	10min	3min	5min	10min	3 min	5min	10min
WIWR	1			1					
WTSP	2				4		1		1
COYE	1								
YBFL	1								
AMRO	1			1					
NAWA	1								
MAWA	1								
RCKI									
NAWA		1		1					
NOPA				1		1			
YBSA				1					
HETH				1					
LISP					1				
COLO								1	
LEFL									1

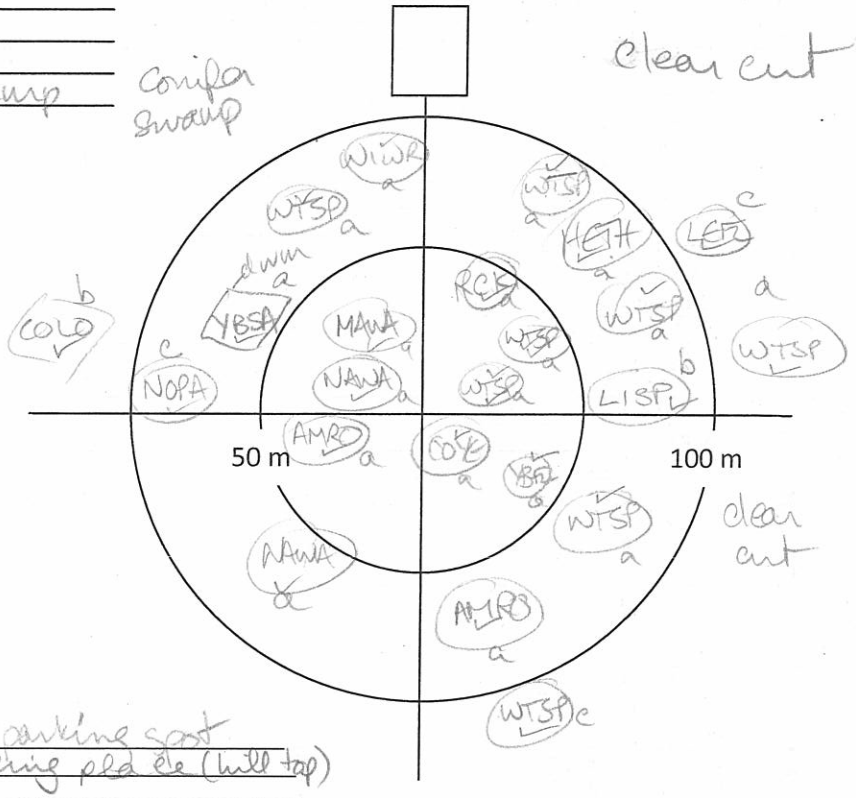

Notes/Incidental observations: heard OSFL at parking spot
heard BAOW at parking pld ele (hill top)

Point Count Name: BB148
UTM:
Start Time 0610
Habitat: Mixed Forest

Species	<50m			<100m			>100m		
	3min	5min	10min	3min	5min	10min	3 min	5min	10min
OVEN	1			2		1			
MAWA	1								
RBNU	1								
MOWA	1								
WTSP	1								1
NAWA				1					
CHSP				1					
PHVI (?)					1				
WIWR									1
SWTH									1

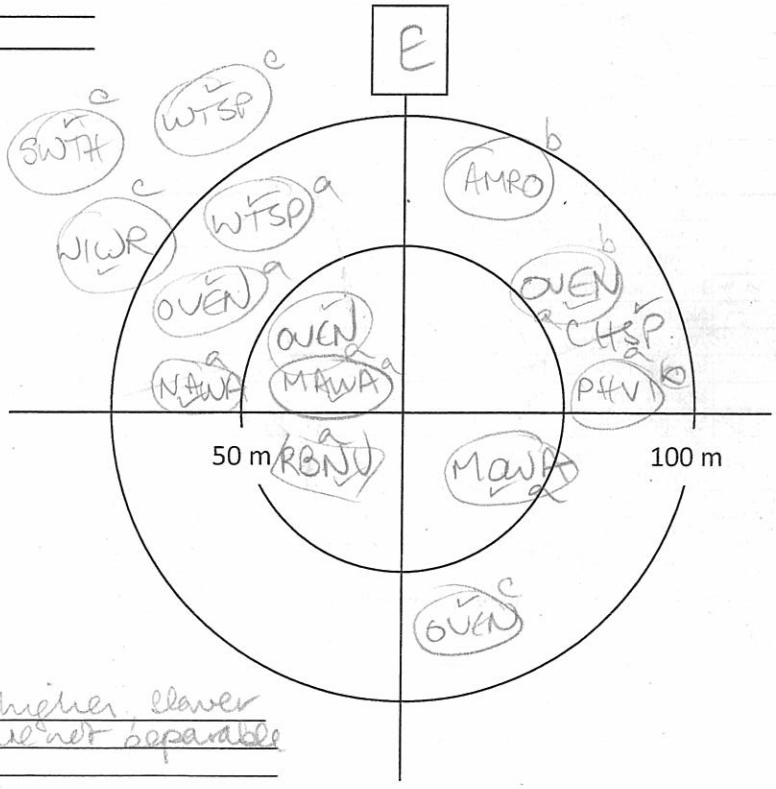

Notes/Incidental observations: PHVI tentative - higher, clearer sweeter than RBVI but the two are not separable

Project Number:
Survey Date: observation for whole point count

AMEC Earth & Environmental
160 Traders Blvd East, Mississauga, ON L4Z 3K7
Tel: (905) 568-2929
Cell: (416) 459-6228
Fax: (905) 568-1686

Other Wildlife Observations **Species at Risk

Obs?	Species	Waypoint	Notes
	Virginia Opossum		
	Shrew sp		
	Star-nosed Mole		
	Bat Sp.		
	Eastern Cottontail		
	Snowshoe Hare		
	European Hare		
	Eastern Chipmunk		
	Woodchuck		
	Grey Squirrel		
VO	Red Squirrel		quite common
	Flying Squirrel sp		
	Beaver		
	Mouse sp		
	Muskrat		
	Meadow Vole		
	Porcupine		
	Coyote		
	Grey Wolf		
	Red Fox		
	Black Bear		
	Raccoon		
	Mink		
TK	Striped Skunk		tracks in mud
	White-tailed Deer		
SC	Moose		abundant winter scat
	Snapping Turtle**		
	Midland Painted Turtle		
	Western Painted Turtle		
	Northern Map Turtle**		
	Blanding's Turtle**		
	Eastern Gartersnake		
	East. Ribbon Snake**		
	Northern Watersnake		
	Redbelly Snake		
	Brown Snake		
	Smooth Greensnake		
	Ringneck Snake		
	Eastern Milksnake**		
	Red-spotted Newt		
	Bl.-spotted Salamander		
	Spotted Salamander		
	Four-toed Salamander		
	Northern Redback		
	American Toad		
	Western Chorus Frog**		
	Boreal Chorus Frog		
VO	Spring Peeper		at first point
	Gray Treefrog		
	Bullfrog*		
	Northern Green Frog		
	Wood Frog		
	Northern Leopard Frog		
	Mink Frog		

Other Species	Waypoint	Notes

AMEC Earth & Environmental
160 Traders Blvd East, Mississauga, ON L4Z 3K7
Tel: (905) 568-2929
Cell: (416) 459-6228
Fax: (905) 568-1686

Project Number: TC121522.
Survey Date: June 10, 2013

Point Count Name: BB151
UTM: _____
Start Time 0726
Habitat: decid

Species	<50m			<100m			>100m		
	3min	5min	10min	3min	5min	10min	3 min	5min	10min
OVEN	1			1				2	
BTBW	1								
BRCR	1								
MAWA	1								
YBSA	1			2					
RBNU	1								
VEER			1						
REVI			1						
NAWA						1			
LEFL				1					
BLJA				1					

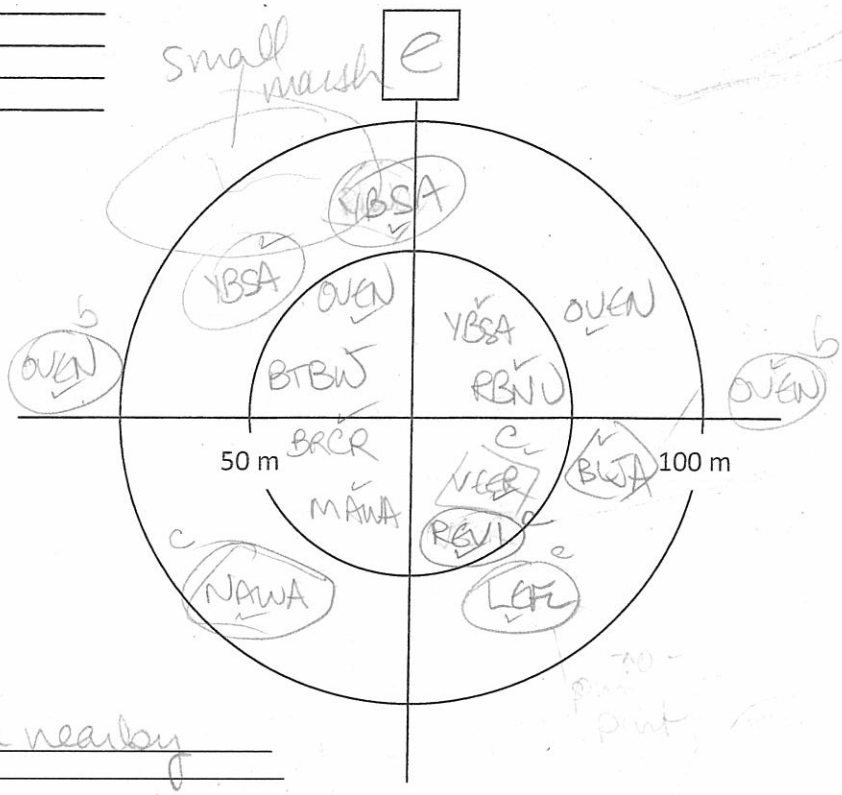

Notes/Incidental observations: Small marsh nearby

Point Count Name: BB153
UTM: _____
Start Time 0750
Habitat: mixed forest mainly conif – fir + Jack Pine

Species	<50m			<100m			>100m		
	3min	5min	10min	3min	5min	10min	3 min	5min	10min
NAWA	1		1	2					
OVEN	1			1					1
BTBW			1						
BLWA				1					
HETH				1					1
WTSP									1

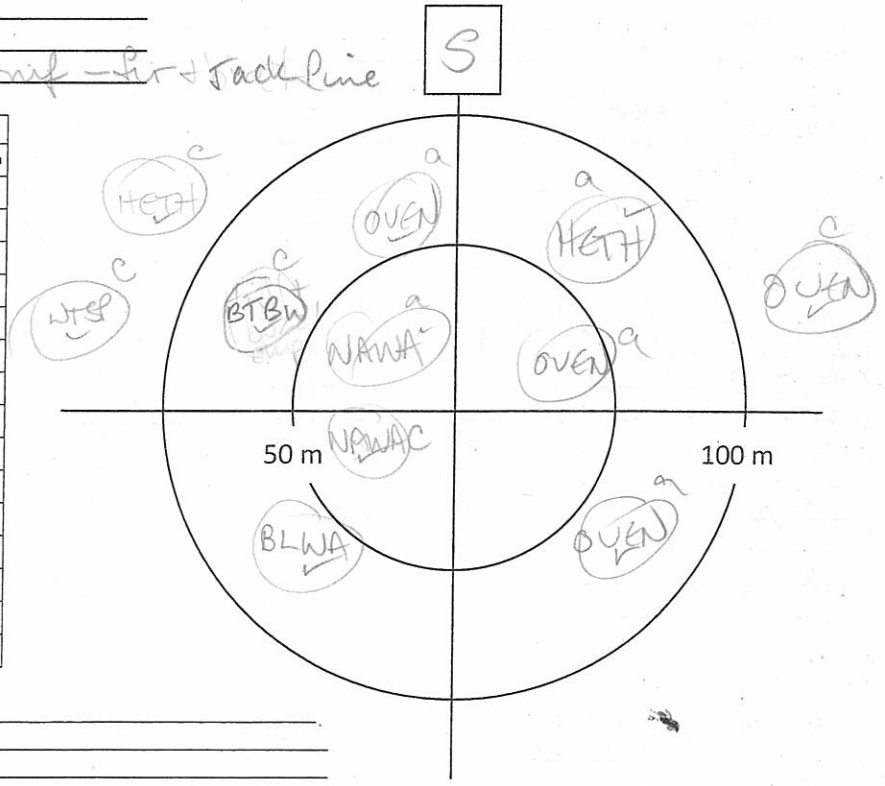

Notes/Incidental observations: _____

Project Number: TC121522
Survey Date: June 10, 2013

AMEC Earth & Environmental
160 Traders Blvd East, Mississauga, ON L4Z 3K7
Tel: (905) 568-2929
Cell: (416) 459-6228
Fax: (905) 568-1686

Point Count Name: BB144
UTM:
Start Time 0635
Habitat: Mixed forest mainly conif

Species	<50m			<100m			>100m		
	3min	5min	10min	3min	5min	10min	3 min	5min	10min
MAWA	1			1					
BRCR	1								
YRWA	1								
SWTH						1			
NAWA				1					
OVEN				1			1		1
CAWA						1			
REVI				1		1			1
BLJA					1				

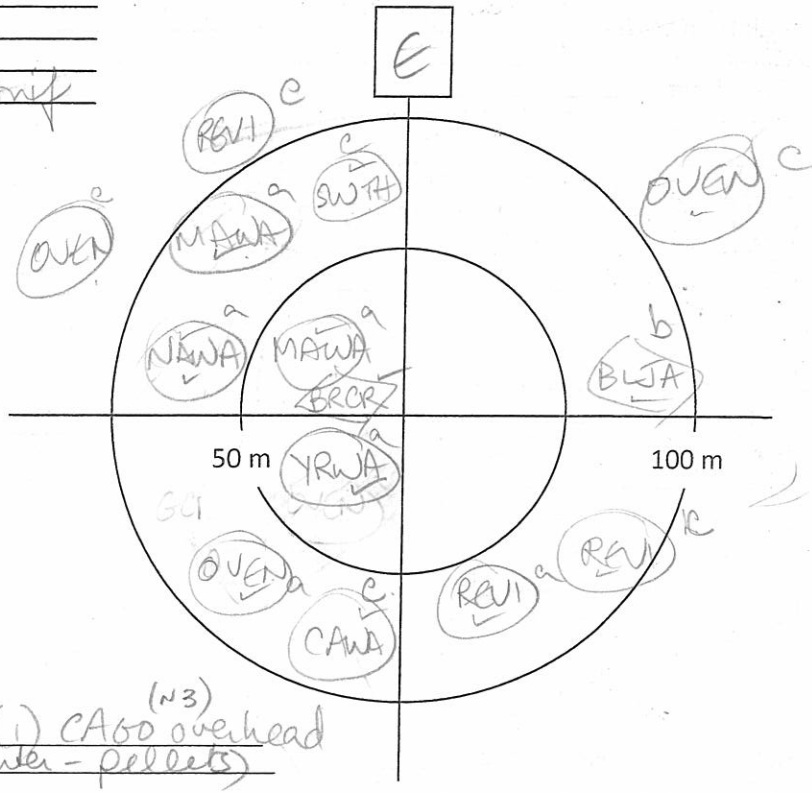

Notes/Incidental observations: Red Squ, SPPE (1) CAGO (N3) overhead
moose scat abundant (winter - pellets)

Point Count Name: BB 147
UTM:
Start Time 0659
Habitat: mixed forest mainly decid

Species	<50m			<100m			>100m		
	3min	5min	10min	3min	5min	10min	3 min	5min	10min
BTBW	1								
NAWA	11			1					
OVEN			1	1			1		
RBNU				1					
YBSA		1							
REVI		1			1				
VEER			1						

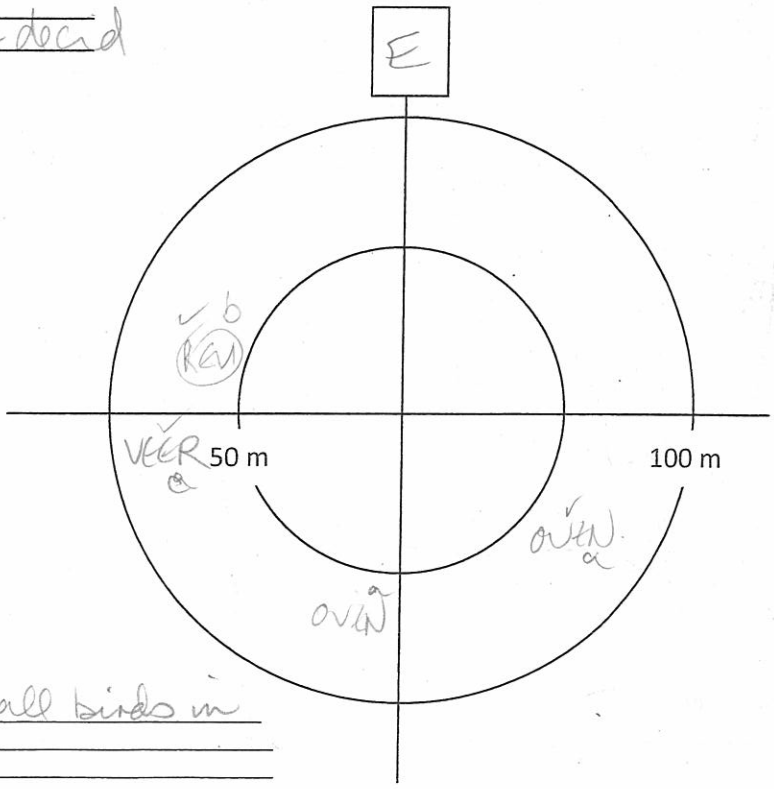

Notes/Incidental observations: did not record all birds in circle - tried just recording in columns

Project Number: TC121562
Survey Date: June 10, 2013

AMEC Earth & Environmental
160 Traders Blvd East, Mississauga, ON L4Z 3K7
Tel: (905) 568-2929
Cell: (416) 459-6228
Fax: (905) 568-1686

Point Count Name: BB150
UTM:
Start Time 0820
Habitat: Mixed ~~forest~~ forest mainly decid - Poplar + fir

Species	<50m			<100m			>100m		
	3min	5min	10min	3min	5min	10min	3 min	5min	10min
REVI	1		1						
BTBW	1								
OVEN	2			3					
BLWA				1					
WTSP				1			1		
HETH							1		
VEER					1				

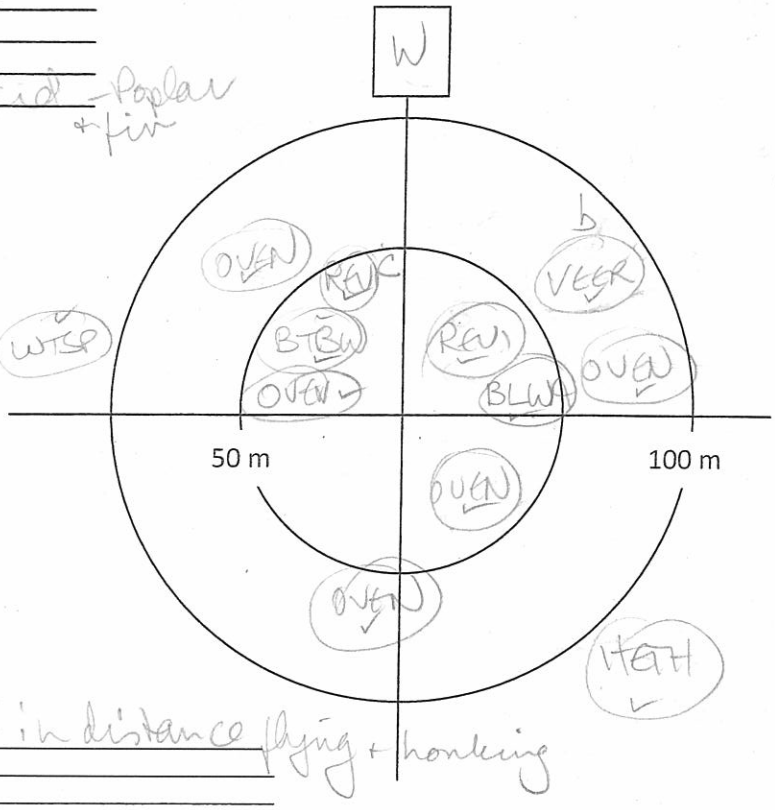

Notes/Incidental observations: Red squ; 5 CAGO in distance flying + honking

Point Count Name: BB152
UTM:
Start Time 0850
Habitat: Coniferous forest & maple sub-canopy

Species	<50m			<100m			>100m		
	3min	5min	10min	3min	5min	10min	3 min	5min	10min
REVI	1								
OVEN				2					
YBSA				1					
NAWA				1		1			
CMWA						1			
MAWA						1			

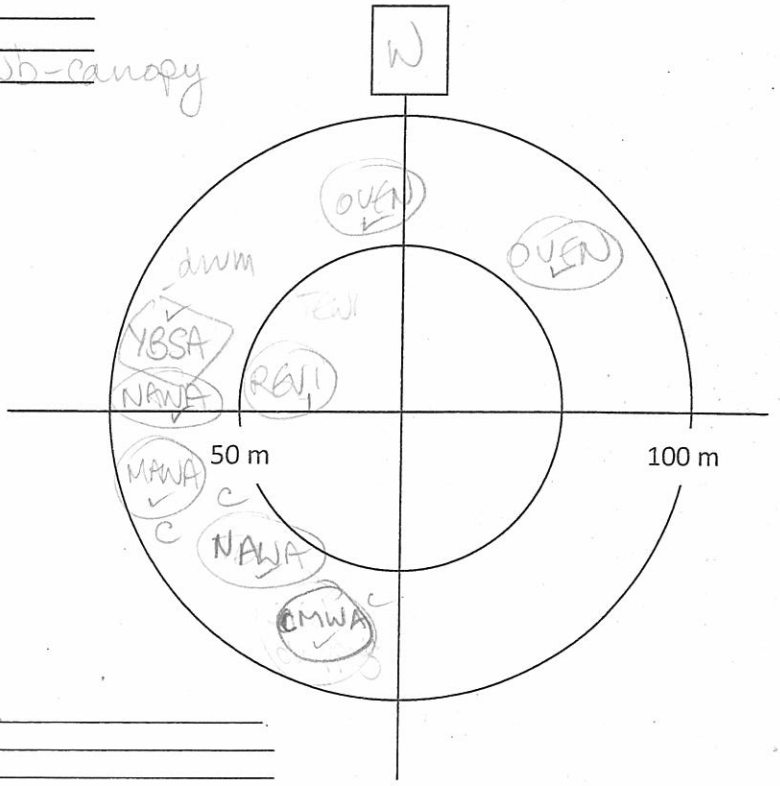

Notes/Incidental observations: CMWA = Cape May

Project Number: TC121522
Survey Date: June 10, 2013

AMEC Earth & Environmental
160 Traders Blvd East, Mississauga, ON L4Z 3K7
Tel: (905) 568-2929
Cell: (416) 459-6228
Fax: (905) 568-1686

Point Count Name: BB149
UTM: _____
Start Time 0912
Habitat: Coniferous forest – mature jackpine

Species	<50m			<100m			>100m		
	3min	5min	10min	3min	5min	10min	3 min	5min	10min
NAWA	1				1				
MAWA	1								
YRWA				1					1
OVEN				1					
REVI						1			

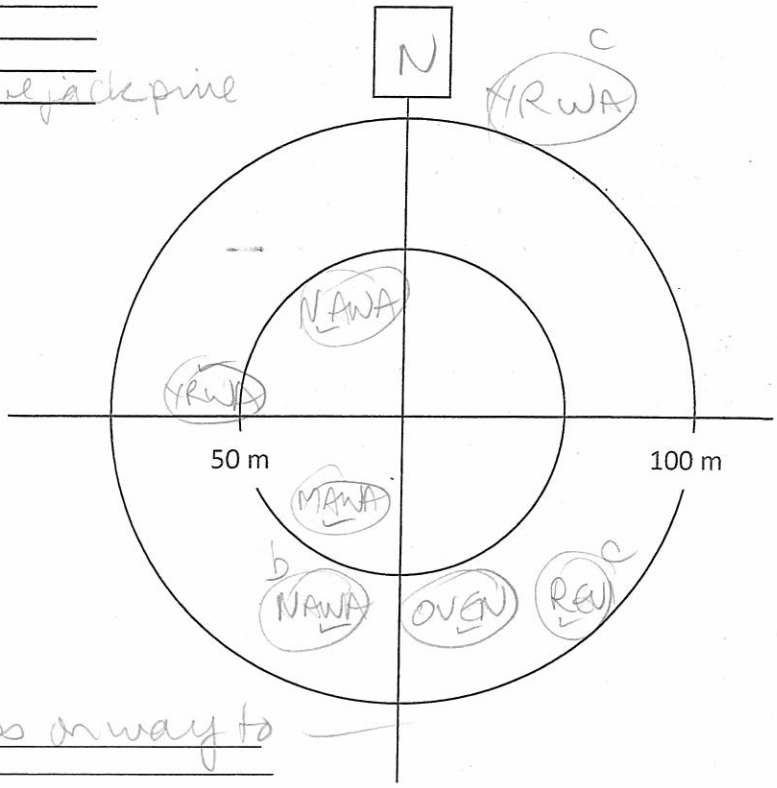

Notes/Incidental observations: burned stumps on way to this point

Point Count Name: BB146
UTM: _____
Start Time 0937
Habitat: mixed forest – mainly conif. – jackpine & birch under

Species	<50m			<100m			>100m		
	3min	5min	10min	3min	5min	10min	3 min	5min	10min
RBNV	1								
NAWA	1			2				1	
MAWA				1					
OVEN						1			
HETH						1			
SWTH							2		

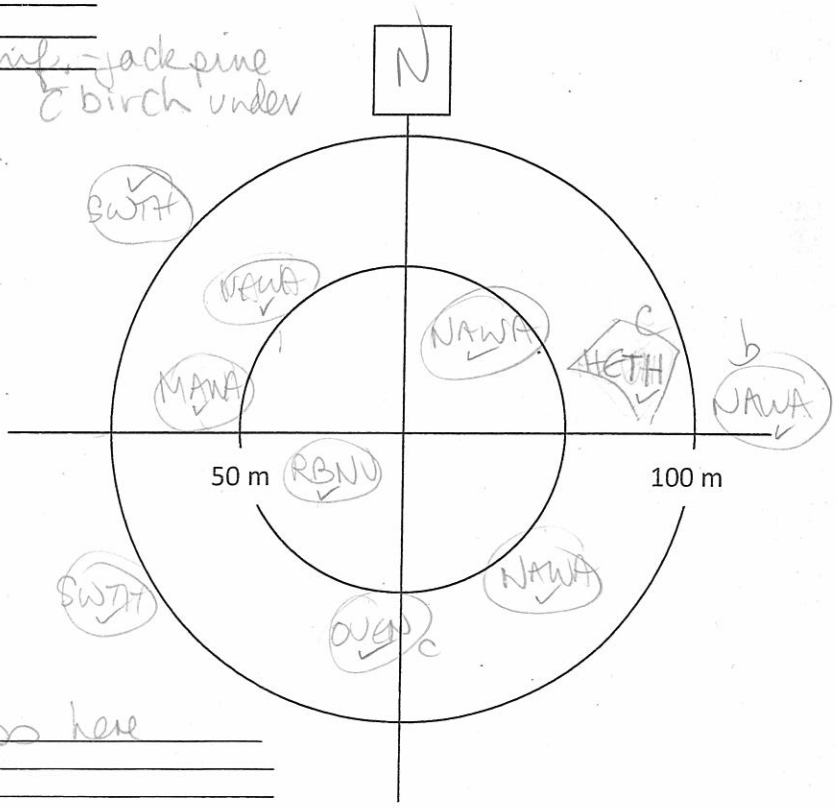

Notes/Incidental observations: burned stumps here

Project Number: TC121522
Survey Date: June 19 2013

AMEC Earth & Environmental
160 Traders Blvd East, Mississauga, ON L4Z 3K7
Tel: (905) 568-2929
Cell: (416) 459-6228
Fax: (905) 568-1686

Point Count Name: BB143
UTM:
Start Time 1005
Habitat: Mixed forest mainly coniferous

Species	<50m			<100m			>100m		
	3min	5min	10min	3min	5min	10min	3 min	5min	10min
NAWA	1			1					
OVEN	1								
BCCH		1							
SWTH				1					
OVEN				2			1		
NA									

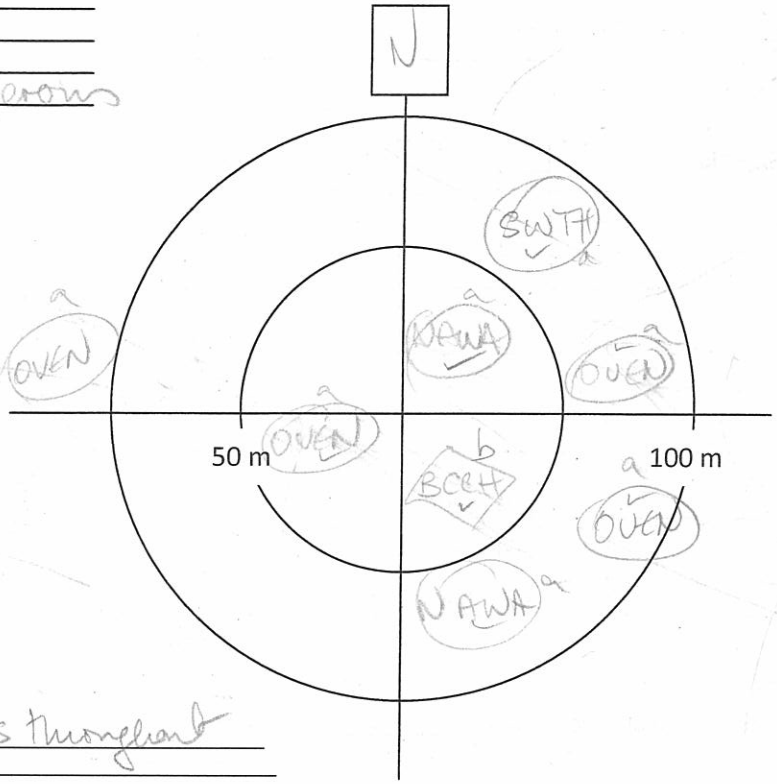

Notes/Incidental observations: Burned stumps throughout

Point Count Name: BB 139
UTM:
Start Time 1030
Habitat: Deciduous forest - Balsam fir understory Poplar C

Species	<50m			<100m			>100m		
	3min	5min	10min	3min	5min	10min	3 min	5min	10min
BAAW	1								
YBSA	1								
OVEN	1								
BCCH	1		1			1			
RCVI						1			
BRCR					1				
BTBW				1					
RCKI				1					

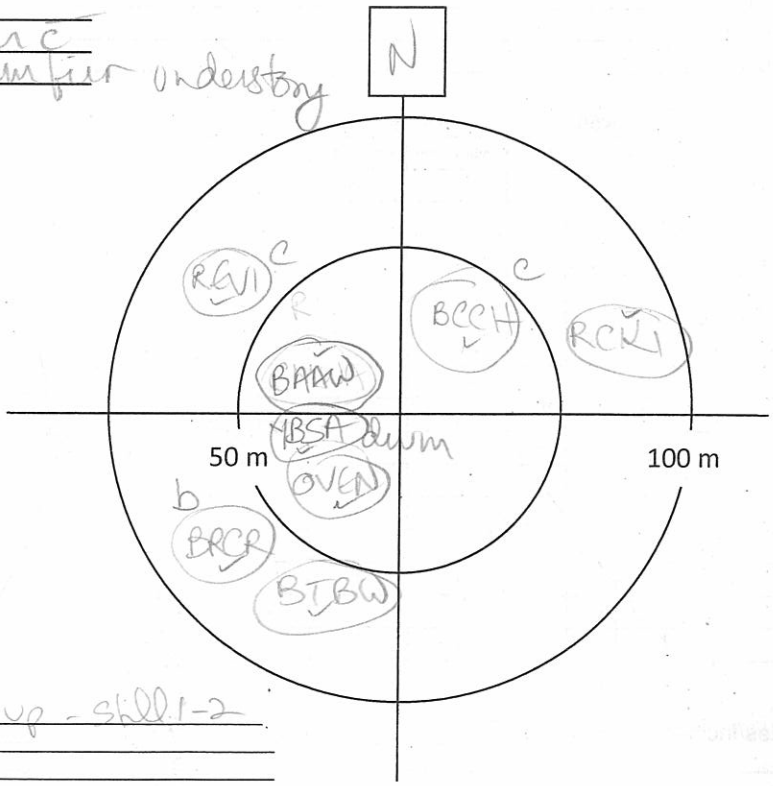

Notes/Incidental observations: wind picking up - still 1-2

Project Number: TC121504
Survey Date: June 10, 2013

AMEC Earth & Environmental
160 Traders Blvd East, Mississauga, ON L4Z 3K7
Tel: (905) 568-2929
Cell: (416) 459-6228
Fax: (905) 568-1686

Point Count Name: _____
UTM: _____
Start Time _____
Habitat: _____

Species	<50m			<100m			>100m		
	3min	5min	10min	3min	5min	10min	3 min	5min	10min

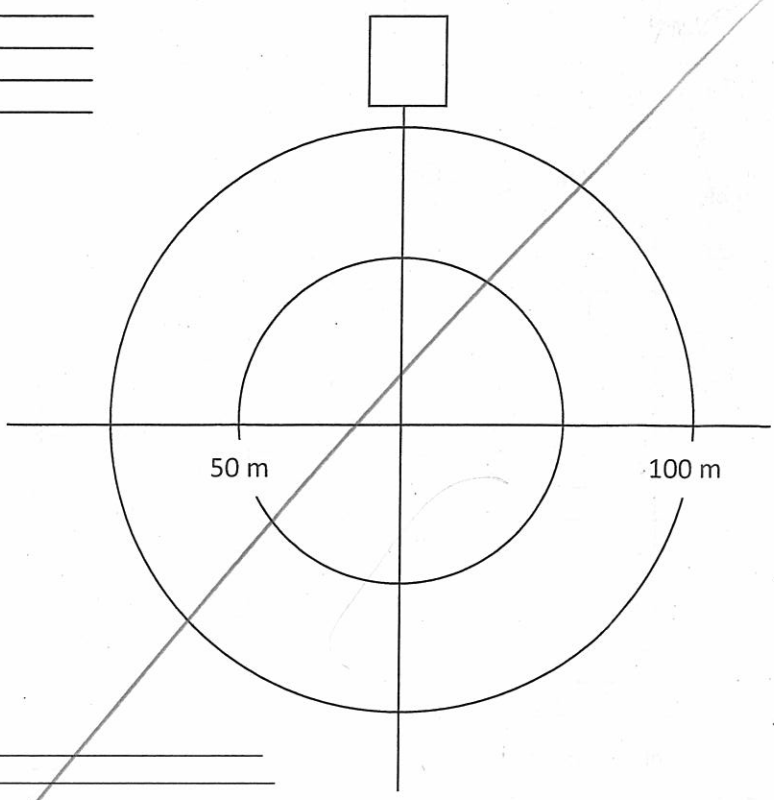

Notes/Incidental observations: _____

Point Count Name: _____
UTM: _____
Start Time _____
Habitat: _____

Species	<50m			<100m			>100m		
	3min	5min	10min	3min	5min	10min	3 min	5min	10min

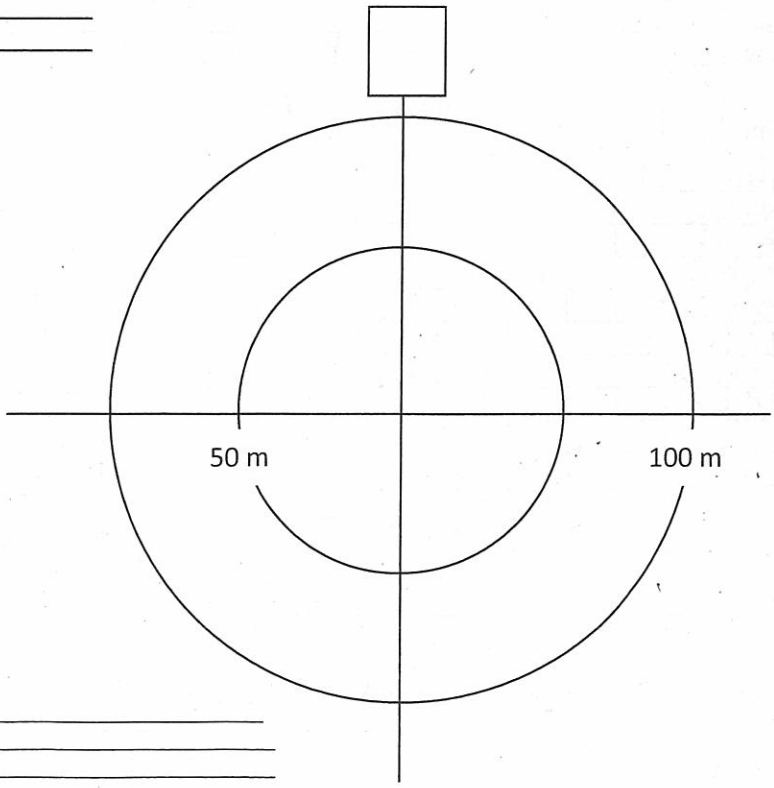

Notes/Incidental observations: _____

Project Number: TC121582
Survey Date: June 10, 2013

AMEC Earth & Environmental
160 Traders Blvd East, Mississauga, ON L4Z 3K7
Tel: (905) 568-2929
Cell: (416) 459-6228
Fax: (905) 568-1686

Point Count Name: BB 140
UTM: _____
Start Time 1055
Habitat: Mixed forest mainly decid - swamp to S

Species	<50m			<100m			>100m		
	3min	5min	10min	3min	5min	10min	3 min	5min	10min
REVI	1					2			
BTGW	1								
YRWA				1					
NAWA					1				

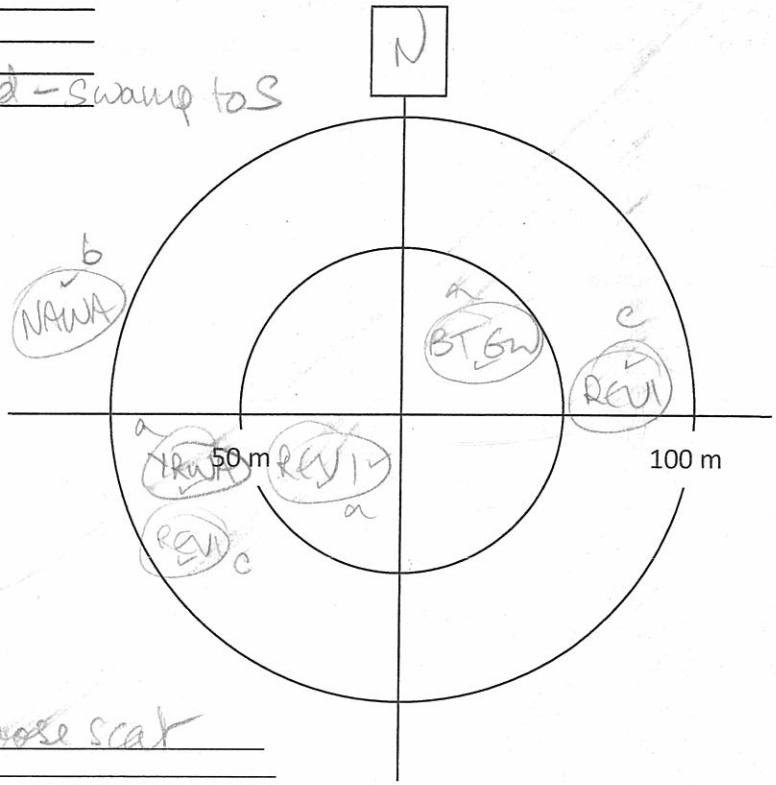

Notes/Incidental observations: abundant moose scat on way to point

Point Count Name: BB 141
UTM: _____
Start Time 1129
Habitat: deciduous - poplar + fir in understory

Species	<50m			<100m			>100m		
	3min	5min	10min	3min	5min	10min	3 min	5min	10min
REVI	2								
VEER	1				1				
LEFL	2								
AMRO	1								
CEDW				1					
HAWO				1					
OVEN									1
WIWR									1

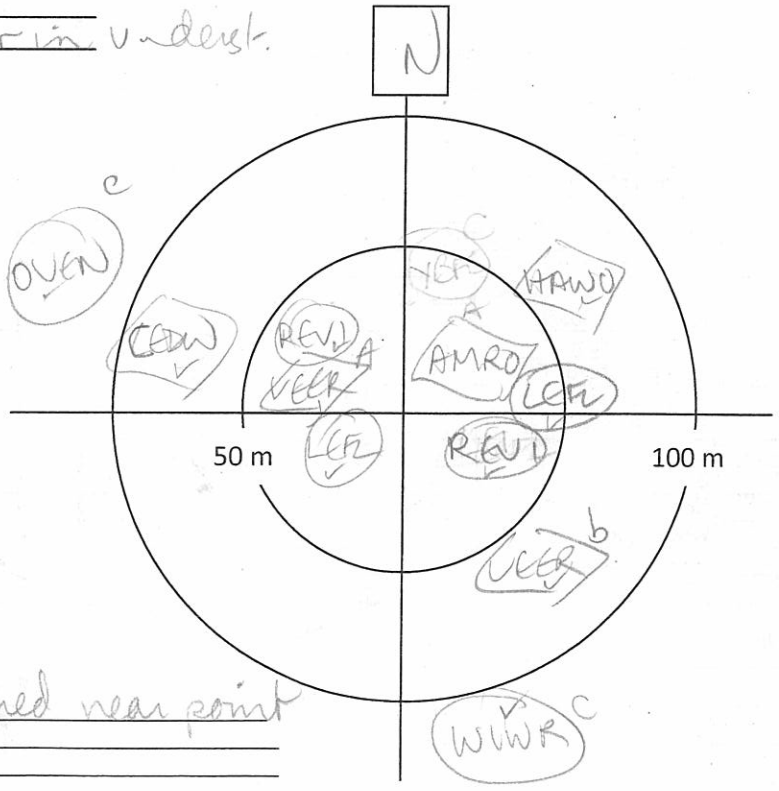

Notes/Incidental observations: woodcock flushed near point count very anxiety behaviour

Project Number:
Survey Date:

AMEC Earth & Environmental
160 Traders Blvd East, Mississauga, ON L4Z 3K7
Tel: (905) 568-2929
Cell: (416) 459-6228
Fax: (905) 568-1686

Other Wildlife Observations **Species at Risk

Obs?	Species	Waypoint	Notes
	Virginia Opossum		
	Shrew sp		
	Star-nosed Mole		
	Bat Sp.		
	Eastern Cottontail		
	Snowshoe Hare		
	European Hare		
	Eastern Chipmunk		
	Woodchuck		
	Grey Squirrel		
	Red Squirrel		
	Flying Squirrel sp		
	Beaver		
	Mouse sp		
	Muskrat		
	Meadow Vole		
	Porcupine		
	Coyote		
	Grey Wolf		
	Red Fox		
	Black Bear		
	Raccoon		
	Mink		
	Striped Skunk		
	White-tailed Deer		
	Moose		
	Snapping Turtle**		
	Midland Painted Turtle		
	Western Painted Turtle		
	Northern Map Turtle**		
	Blanding's Turtle**		
	Eastern Gartersnake		
	East. Ribbon Snake**		
	Northern Watersnake		
	Redbelly Snake		
	Brown Snake		
	Smooth Greensnake		
	Ringneck Snake		
	Eastern Milksnake**		
	Red-spotted Newt		
	Bl.-spotted Salamander		
	Spotted Salamander		
	Four-toed Salamander		
	Northern Redback		
	American Toad		
	Western Chorus Frog**		
	Boreal Chorus Frog		
	Spring Peeper		
	Gray Treefrog		
	Bullfrog*		
	Northern Green Frog		
	Wood Frog		
	Northern Leopard Frog		
	Mink Frog		

Other Species	Waypoint	Notes

Notes filled out on p. 4 of this group

Project Number: JC121522
Survey Date: June 10, 2013

AMEC Earth & Environmental
160 Traders Blvd East, Mississauga, ON L4Z 3K7
Tel: (905) 568-2929
Cell: (416) 459-6228
Fax: (905) 568-1686

Point Count Name: BB142
UTM: _____
Start Time 1156
Habitat: clear cut adjacent to young conif forest

Species	<50m			<100m			>100m		
	3min	5min	10min	3min	5min	10min	3 min	5min	10min
NAWA	1			1					
CSWA	2								
WTSP				1	1				
MAWA				1					

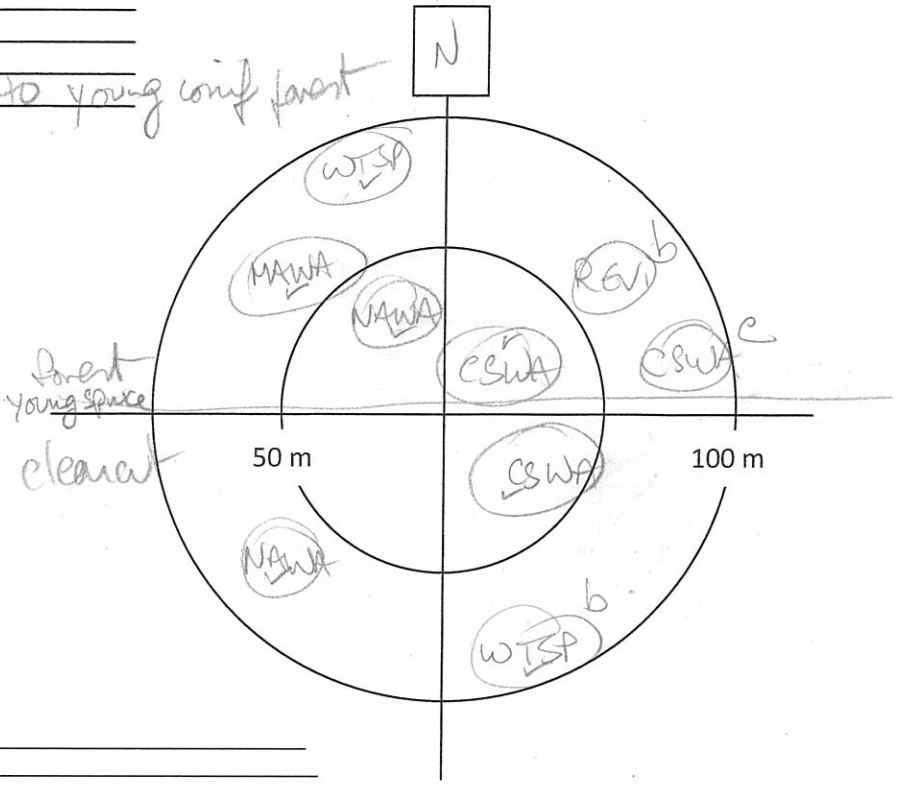

Notes/Incidental observations: _____

Point Count Name: _____
UTM: _____
Start Time _____
Habitat: _____

Species	<50m			<100m			>100m		
	3min	5min	10min	3min	5min	10min	3 min	5min	10min

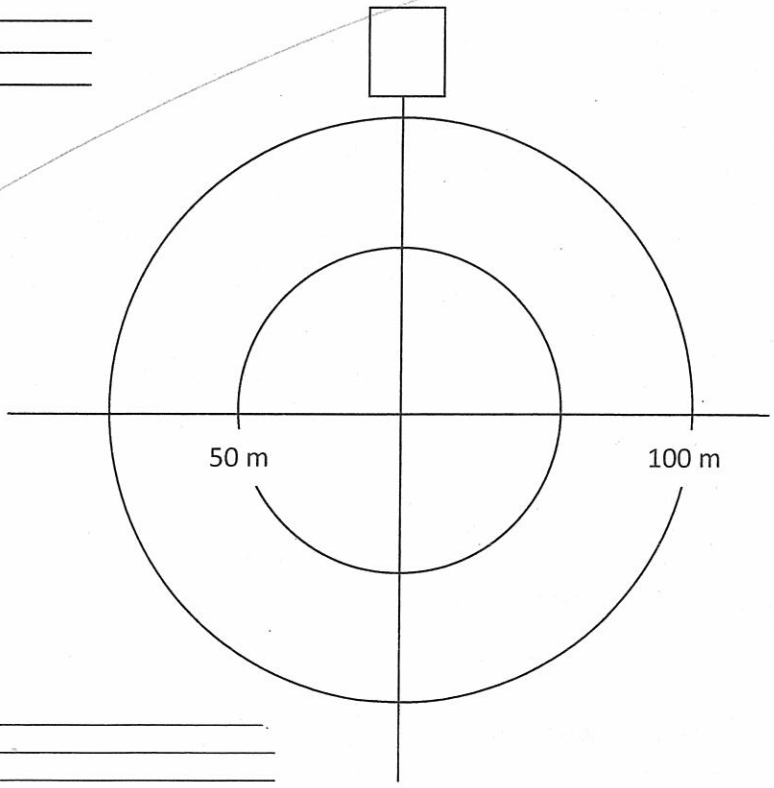

Notes/Incidental observations: _____

Project Number:
Survey Date:

AMEC Earth & Environmental
160 Traders Blvd East, Mississauga, ON L4Z 3K7
Tel: (905) 568-2929
Cell: (416) 459-6228
Fax: (905) 568-1686

Point Count Name: _____
UTM: _____
Start Time _____
Habitat: _____

Species	<50m			<100m			>100m		
	3min	5min	10min	3min	5min	10min	3 min	5min	10min

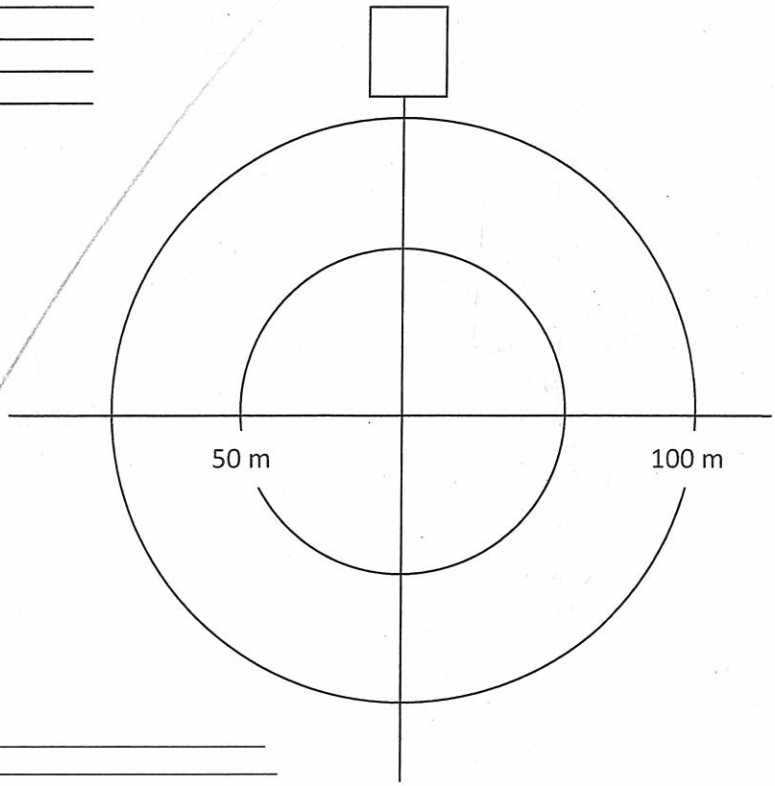

Notes/Incidental observations: _____
_____
_____

Point Count Name: _____
UTM: _____
Start Time _____
Habitat: _____

Species	<50m			<100m			>100m		
	3min	5min	10min	3min	5min	10min	3 min	5min	10min

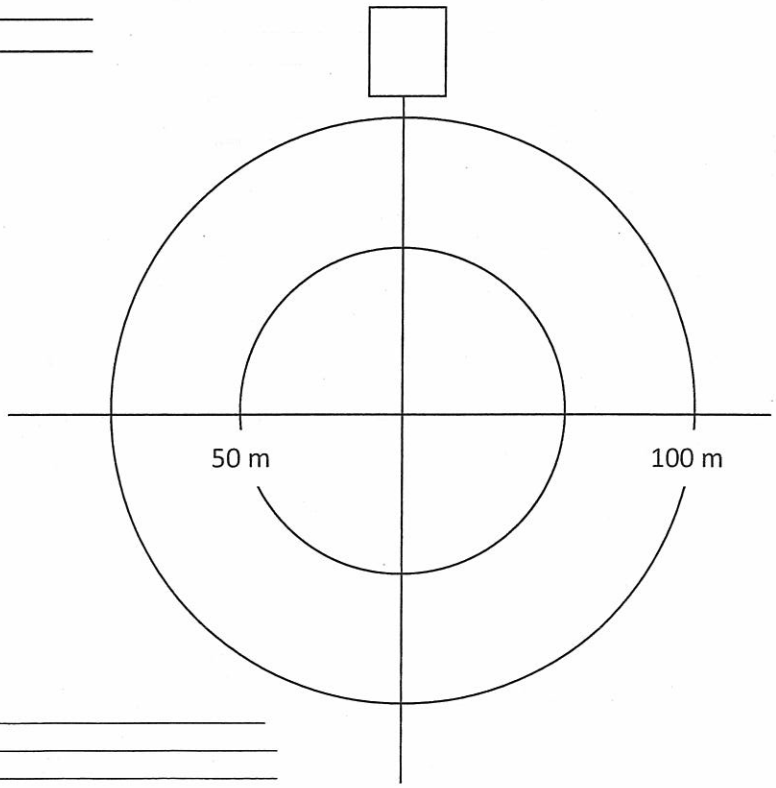

Notes/Incidental observations: _____
_____
_____

AMEC Earth & Environmental
160 Traders Blvd East, Mississauga, ON L4Z 3K7
Tel: (905) 568-2929
Cell: (416) 459-6228
Fax: (905) 568-1686

Breeding Bird Point Count Survey

Project Name: IAMGOLD		**Project Number:** TC121522.	
Crew Leader: JVJP 11 2013	**Observers:** Jon Pleizier		
Date: June 11, 2013	**Start Time (24hr):** 05:16	**End Time (24hr):**	
Weather: 100% cloud → 50% →	**Temperature:** 100	**Wind:** 0	**Precipitation (Circle):** (0) None 1 Haze/Fog 2 Drizzle 3 Rain

Point Count Name: BP93
UTM: 017 (E4141
Start Time 05:16
Habitat: SPRUCE

Species	<50m			<100m			>100m		
	3min	5min	10min	3min	5min	10min	3 min	5min	10min
NAWA	1			1		1			
WTSP	111			11					
YBFL	1			1		1			
GCKI	1								
HETH				1		1			
BHVI						1			
DEJU				1					
WIWR									1

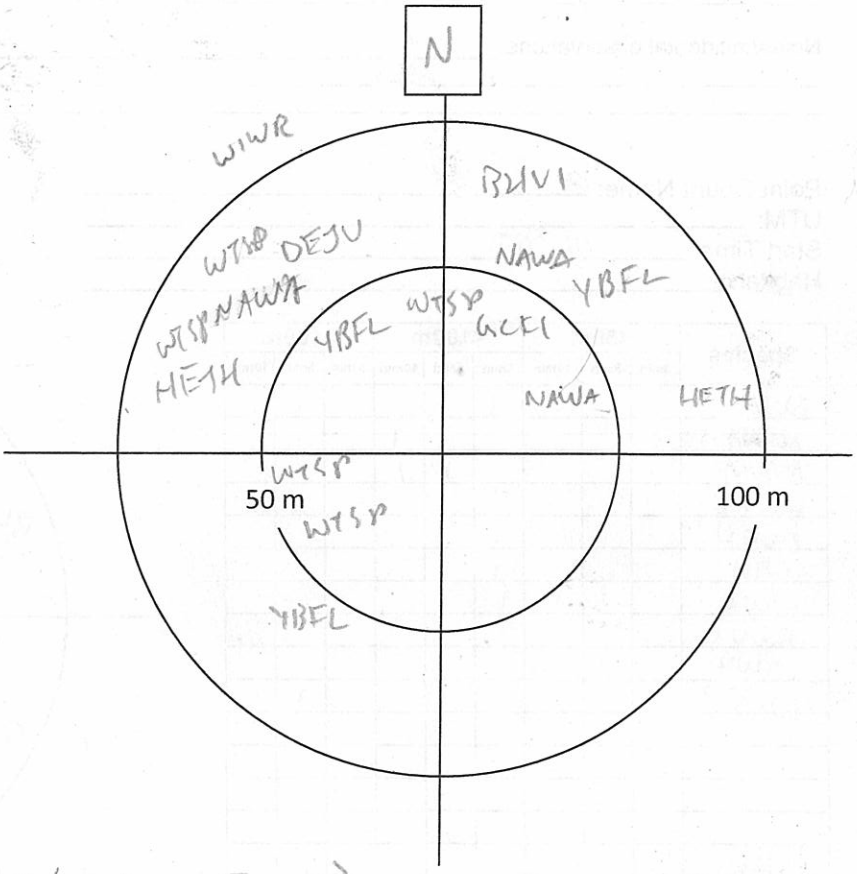

Notes/Incidental observations: en route SPGR (nest w 5 eggs)

Project Number: TC121522
Survey Date: June 11, 2013

AMEC Earth & Environmental
160 Traders Blvd East, Mississauga, ON L4Z 3K7
Tel: (905) 568-2929
Cell: (416) 459-6228
Fax: (905) 568-1686

Point Count Name: BB90
UTM: 015 (E414)
Start Time 05:41
Habitat: Ash swamp

Species	<50m			<100m			>100m		
	3min	5min	10min	3min	5min	10min	3 min	5min	10min
WIWR	1			1	1				
NAWA	1								
BAWW	1								
BTNW				1					
AMCR							1		
BCCH				1					
YBSA								1	
RBNU						1			
REVI									1
MAWA						1			

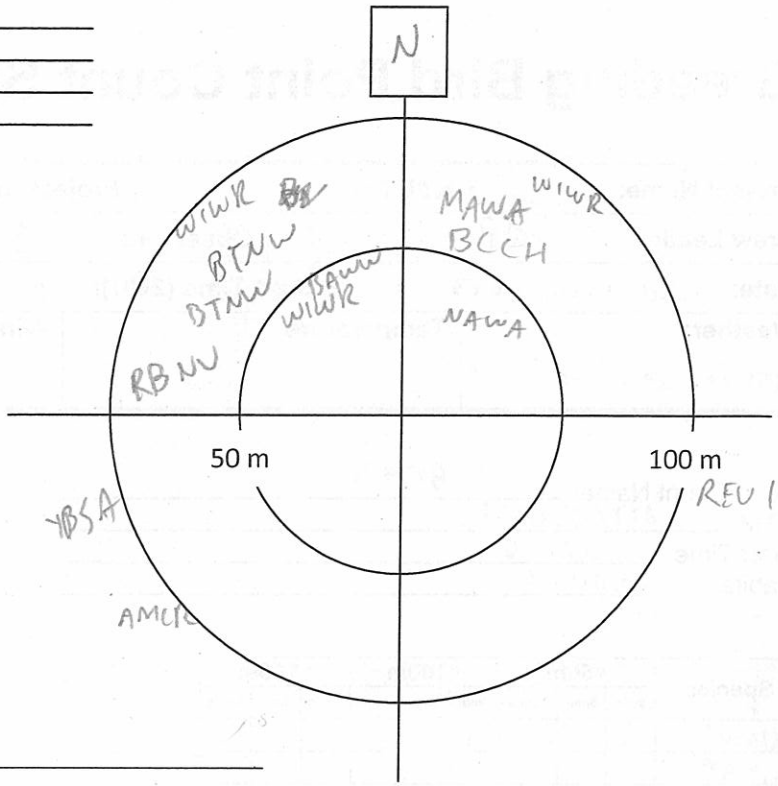

Notes/Incidental observations: RESQ

Point Count Name: BB88
UTM:
Start Time 06:03
Habitat:

Species	<50m			<100m			>100m		
	3min	5min	10min	3min	5min	10min	3 min	5min	10min
BLJA				1					
NAWA	1					1			
MAWA	1				1	1			
HETH				1					
OVEN				1					
SWTH				1					
YRWA			1	1					
REVI				1					
WIWR		1							
WTSP								1	

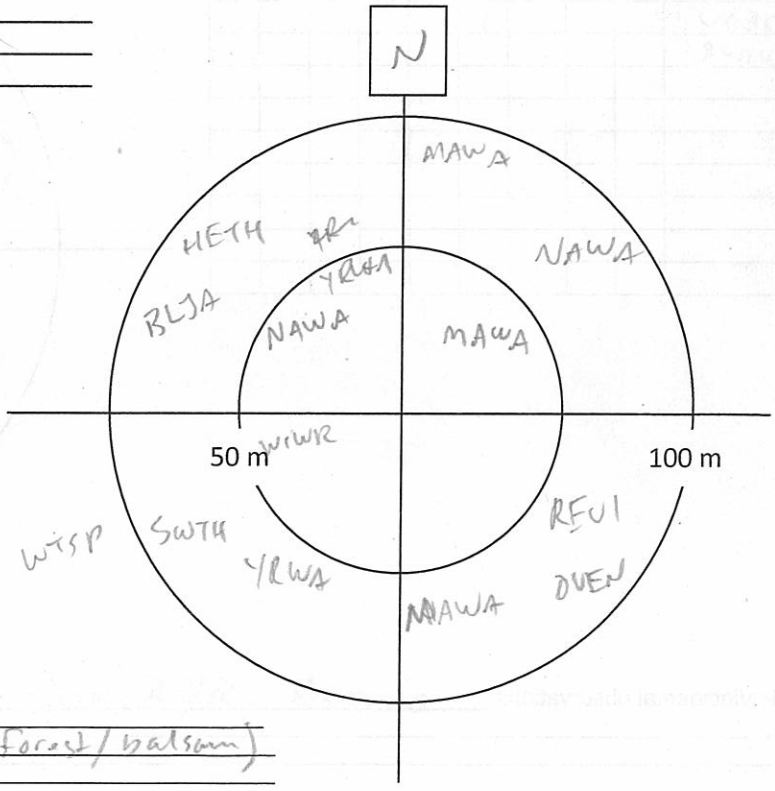

Notes/Incidental observations: RESQ
-enroute - CMWA (spruce forest/balsam)

Project Number: TCI21522
Survey Date: June 11, 2013

AMEC Earth & Environmental
160 Traders Blvd East, Mississauga, ON L4Z 3K7
Tel: (905) 568-2929
Cell: (416) 459-6228
Fax: (905) 568-1686

Point Count Name: BB87
UTM:
Start Time 06:22
Habitat:

Species	<50m			<100m			>100m		
	3min	5min	10min	3min	5min	10min	3 min	5min	10min
WIWR	1								
BBWA				1					
YBSA				1					
OVEN	1								
SWTH				1					
MAWA				1					
NAWA					1				
REVI		1	1						
YBFL						1			

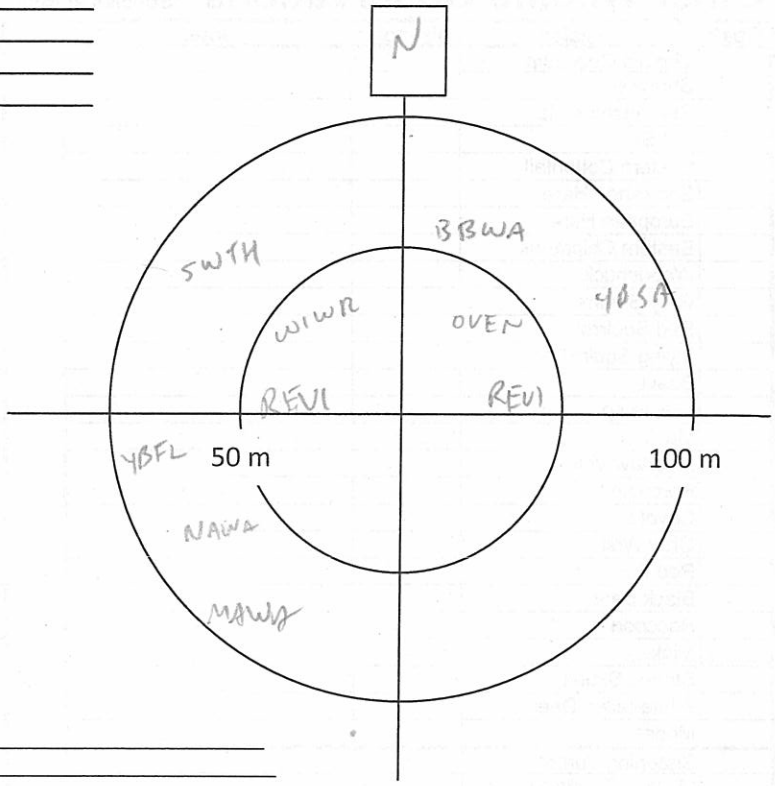

Notes/Incidental observations: RESQ

Point Count Name: BB85
UTM:
Start Time 06:43
Habitat:

Species	<50m			<100m			>100m		
	3min	5min	10min	3min	5min	10min	3 min	5min	10min
NOPA	1								
BTNW	11			11					
REVI	1				1				
OVEN	1								
SWTH					1				
NAWA			11						
BCCH						1			

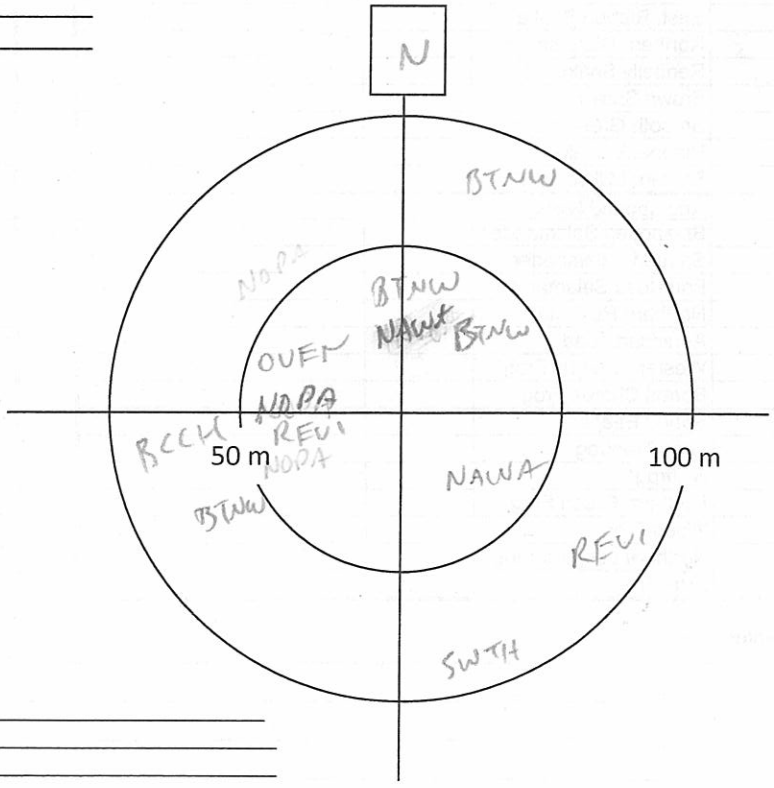

Notes/Incidental observations:

Project Number: TC121522
Survey Date: June 11, 2013

AMEC Earth & Environmental
160 Traders Blvd East, Mississauga, ON L4Z 3K7
Tel: (905) 568-2929
Cell: (416) 459-6228
Fax: (905) 568-1686

Point Count Name: BB84
UTM: _____
Start Time 07:02
Habitat: _____

Species	<50m			<100m			>100m		
	3min	5min	10min	3min	5min	10min	3 min	5min	10min
RWBR	1								
SWTH									
REVI	1								
LEFL	1								
RCKI				1					
YBSA				1		1			
NAWA	1					1			
OVEN				1					
MAWA					1				
RBNU						1			
BLJA			1						
GCKI						1			

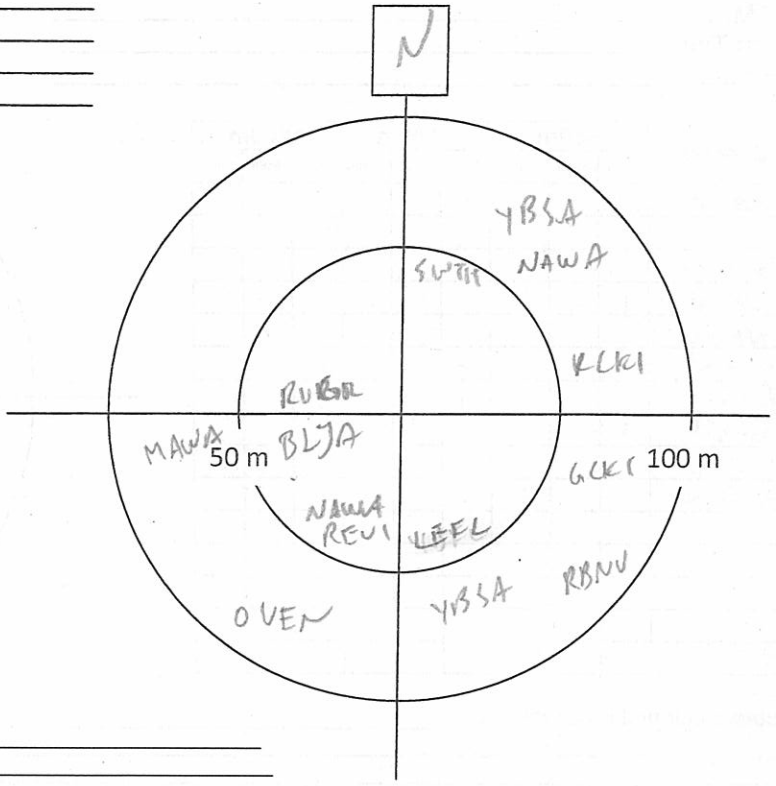

Notes/Incidental observations: _____

Point Count Name: BB43
UTM: _____
Start Time 07:26
Habitat: _____

Species	<50m			<100m			>100m		
	3min	5min	10min	3min	5min	10min	3 min	5min	10min
LEFL	1								
OVEN			1	1					
RBNU	1			1					
NOPA	1								
SWTH							1		
BTNW				1					
REVI				1					
GCKI		1							
BHVI		1							
NAWA						1			
MAWA			1						
BAWW			1			1			

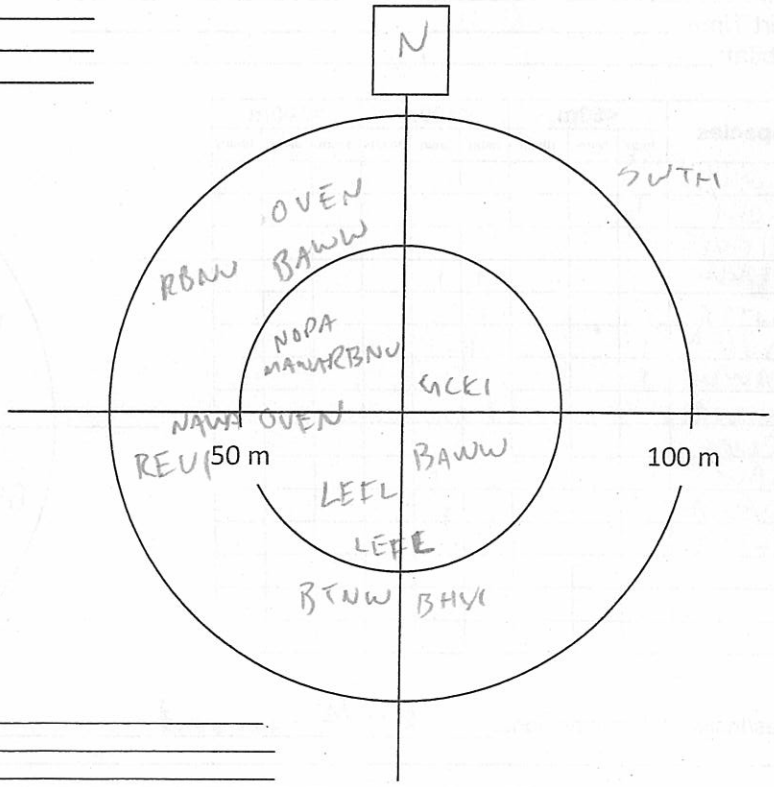

Notes/Incidental observations: _____

Project Number: TC121522
Survey Date: June 11, 2013

AMEC Earth & Environmental
160 Traders Blvd East, Mississauga, ON L4Z 3K7
Tel: (905) 568-2929
Cell: (416) 459-6228
Fax: (905) 568-1686

Point Count Name: BB86
UTM: _____
Start Time 07:48
Habitat: _____

Species	<50m			<100m			>100m		
	3min	5min	10min	3min	5min	10min	3 min	5min	10min
MAWA				1					
BHVI				1					
BTNW				1					
WIWR	1								
NAWA				1					
OVEN							1		
RCKI				1					
GCKI	1								
LEFL									
BLBW			1						

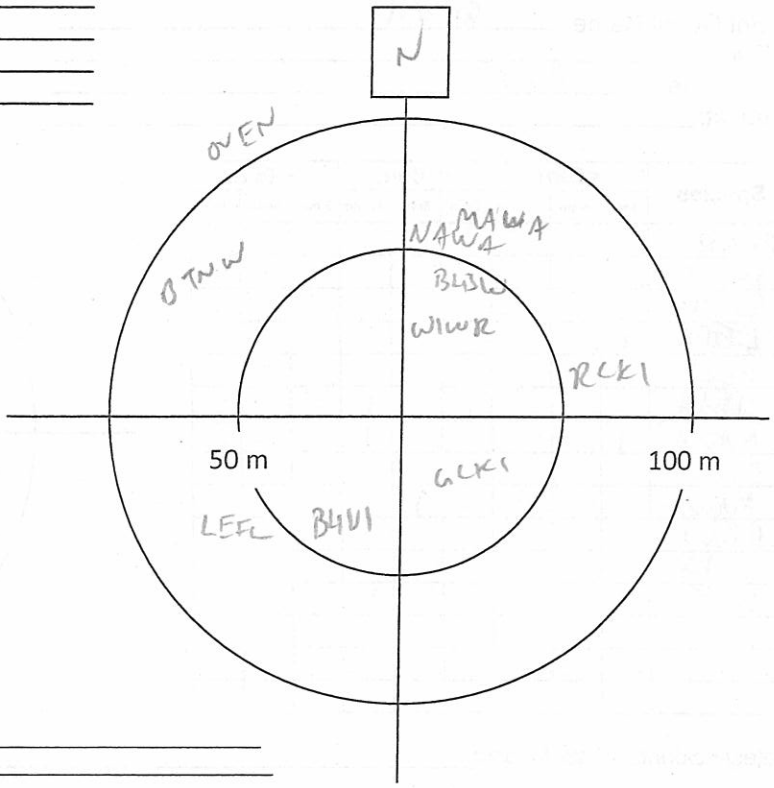

Notes/Incidental observations: _____

Point Count Name: BB89
UTM: _____
Start Time 08:11
Habitat: _____

Species	<50m			<100m			>100m		
	3min	5min	10min	3min	5min	10min	3 min	5min	10min
SWTH				1					
GCKI	1								
REVI	1			1					
BTNW				1	1				1
WTSP				1					
OVEN	1			11					
BAWW	1								
WIWR				1					
RCKI				1					
BTBW					1				
MAWA					1				
HETH									1
1									

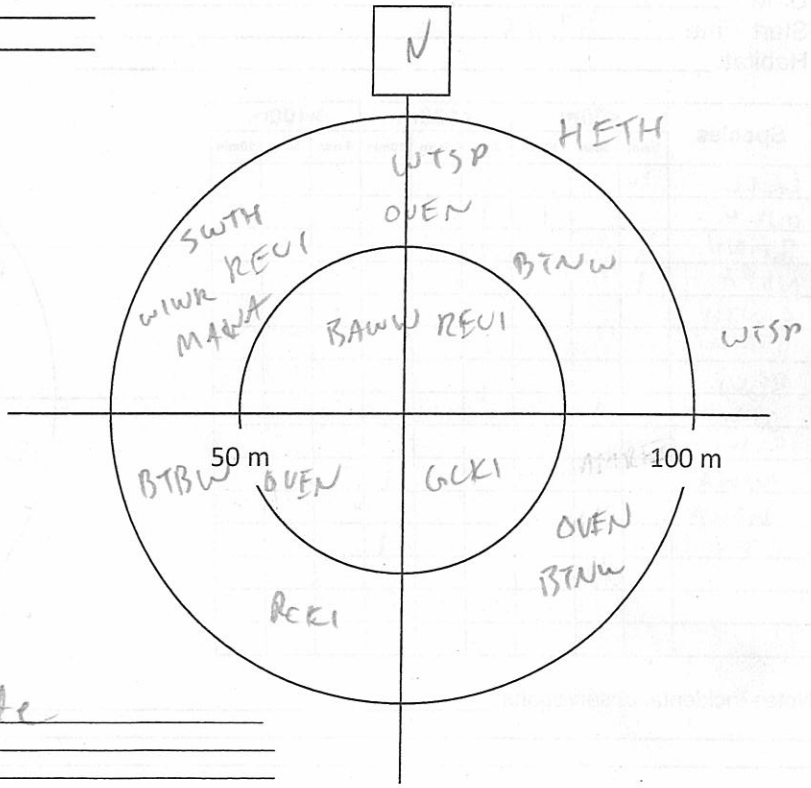

Notes/Incidental observations: BBWA enroute

AMEC Earth & Environmental
160 Traders Blvd East, Mississauga, ON L4Z 3K7
Tel: (905) 568-2929
Cell: (416) 459-6228
Fax: (905) 568-1686

Project Number: TC121562
Survey Date: June 11, 2013

Point Count Name: BB91
UTM: _____
Start Time 04:35
Habitat: Young poplar dominated w/ mountain maple - coarse - mixed conifer in sub-

Species	<50m			<100m			>100m		
	3min	5min	10min	3min	5min	10min	3 min	5min	10min
MAWA	1								
NAWA	1								
OVEN				1					
SWTH				1		1			
RBNU				1					
BTNW				1					
REVI						11			

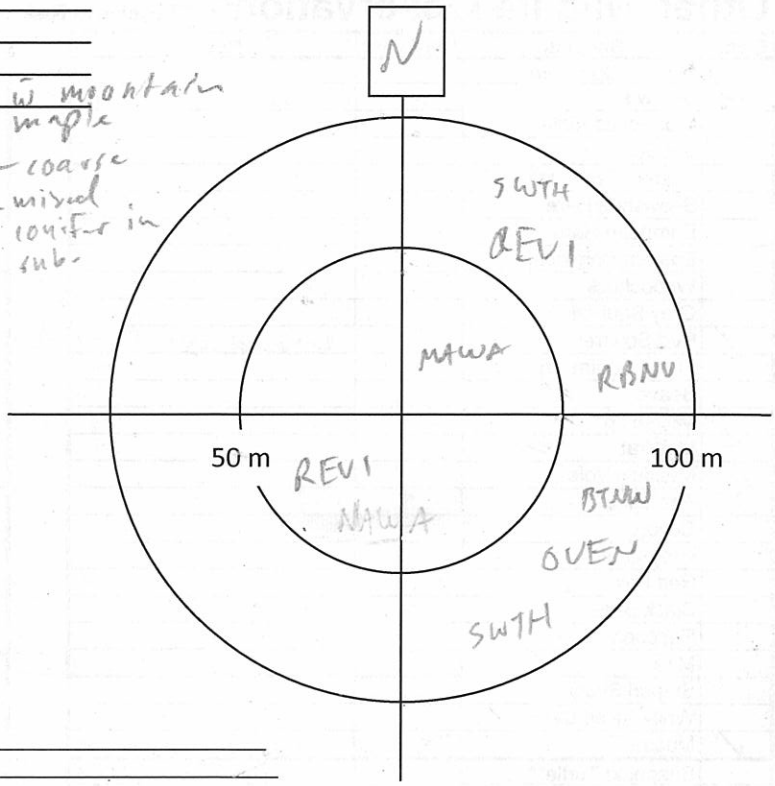

Notes/Incidental observations: _____

Point Count Name: BB92
UTM: _____
Start Time 04:57
Habitat: _____

Species	<50m			<100m			>100m		
	3min	5min	10min	3min	5min	10min	3 min	5min	10min
NAWA		1		11				1	
MAWA				1					
WTSP	1	1							
RLKI				1					
GRJA				1					
COYE	1			1	1				
RBNU					1				
SWSP	1			1					
SWTH									1

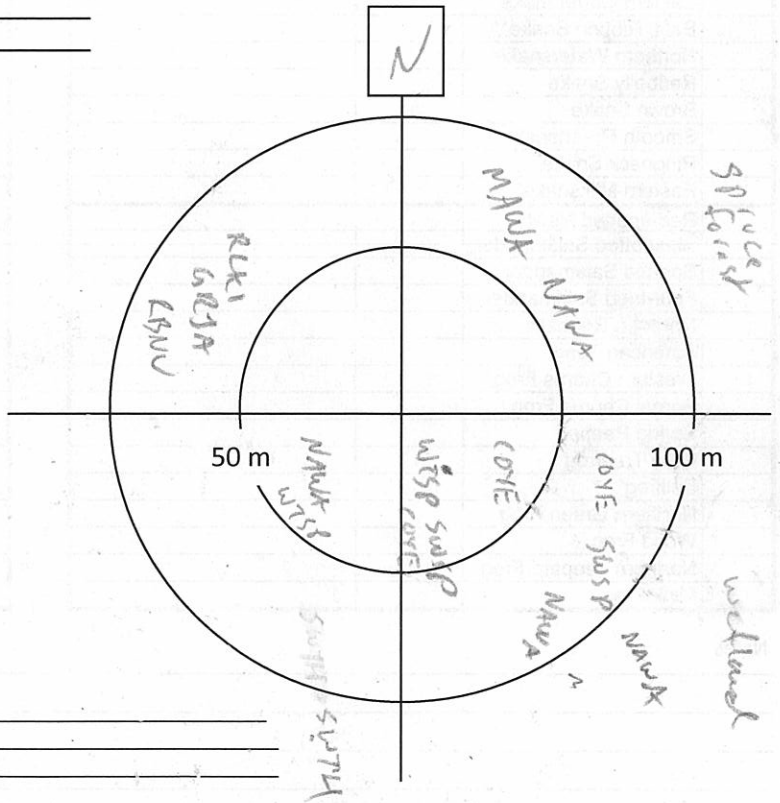

Notes/Incidental observations: _____

Project Number:
Survey Date:

AMEC Earth & Environmental
160 Traders Blvd East, Mississauga, ON L4Z 3K7
Tel: (905) 568-2929
Cell: (416) 459-6228
Fax: (905) 568-1686

Other Wildlife Observations **Species at Risk

Obs?	Species	Waypoint	Notes
	Virginia Opossum		
✓	Shrew sp		Not seen during this survey - seen 2x near camp - small, long tail (1/2 length of body)
	Star-nosed Mole		
	Bat Sp.		
	Eastern Cottontail		
	Snowshoe Hare		
	European Hare		
	Eastern Chipmunk		
	Woodchuck		
	Grey Squirrel		
✓	Red Squirrel		Heard at most PCs
	Flying Squirrel sp		
	Beaver		
	Mouse sp		
	Muskrat		
	Meadow Vole		
	Porcupine		
	Coyote		
	Grey Wolf		
	Red Fox		
	Black Bear		
	Raccoon		
	Mink		
	Striped Skunk		
	White-tailed Deer		
✓	Moose		Tracks
	Snapping Turtle**		
	Midland Painted Turtle		
	Western Painted Turtle		
	Northern Map Turtle**		
	Blanding's Turtle**		
	Eastern Gartersnake		
	East. Ribbon Snake**		
	Northern Watersnake		
	Redbelly Snake		
	Brown Snake		
	Smooth Greensnake		
	Ringneck Snake		
	Eastern Milksnake**		
	Red-spotted Newt		
	Bl.-spotted Salamander		
	Spotted Salamander		
	Four-toed Salamander		
	Northern Redback		
	American Toad		
	Western Chorus Frog**		
	Boreal Chorus Frog		
	Spring Peeper		
	Gray Treefrog		
	Bullfrog*		
	Northern Green Frog		
	Wood Frog		
	Northern Leopard Frog		
	Mink Frog		

Other Species	Waypoint	Notes

Notes

Project Number: TC121522
Survey Date: June 11, 2013

AMEC Earth & Environmental
160 Traders Blvd East, Mississauga, ON L4Z 3K7
Tel: (905) 568-2929
Cell: (416) 459-6228
Fax: (905) 568-1686

Point Count Name: BB95
UTM:
Start Time 09:19
Habitat: Birch dom, mixed conifer

Species	<50m			<100m			>100m		
	3min	5min	10min	3min	5min	10min	3 min	5min	10min
SWTH				1	1				
REVI	1								
NAWA	1								
BTNW	1								
CORA								1	

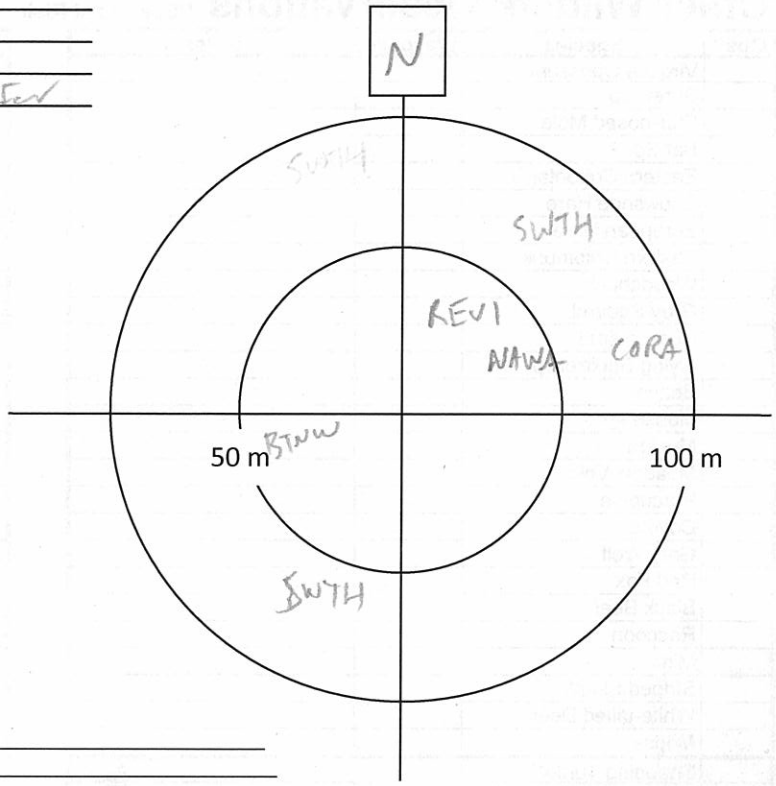

Notes/Incidental observations: RESQ

Point Count Name: BB94
UTM:
Start Time 09:42
Habitat:

Species	<50m			<100m			>100m		
	3min	5min	10min	3min	5min	10min	3 min	5min	10min
BTBW				1					
RCKI	1				1				
WIWR	1								
CORA				1					
BAWW	1								
MOWA	1								
CSWA		1							
OVEN			1						

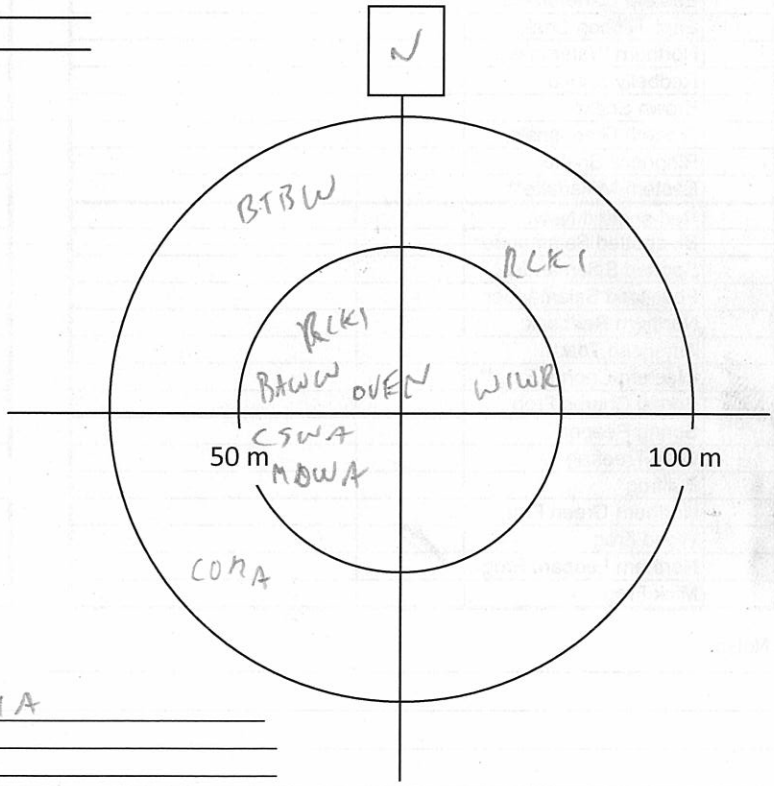

Notes/Incidental observations: en route - COHA

AMEC Earth & Environmental
160 Traders Blvd East, Mississauga, ON L4Z 3K7
Tel: (905) 568-2929
Cell: (416) 459-6228
Fax: (905) 568-1686

Breeding Bird Point Count Survey

Project Name: IMG		**Project Number:** map 7 TC121522	
Crew Leader: Jon Pleizier	**Observers:** Sarah Mawby		
Date: 10 June 13	**Start Time (24hr):** 0500	**End Time (24hr):** 1130	
Weather: cloud + sun	**Temperature:** 15	**Wind:** 0	**Precipitation (Circle):** (0) None 1 Haze/Fog 2 Drizzle 3 Rain

Point Count Name: BB 196
UTM: _____
Start Time 0513
Habitat: spruce forest - maple understory

Species	<50m			<100m			>100m		
	3min	5min	10min	3min	5min	10min	3 min	5min	10min
SWTH	1			1			1		
MAWA	2								
RBNU	1								
NAWA		1	1						
BLWA		1							
OVEN				2					
WIWR				1					
BAWW				1					
AMRO				1					
S									

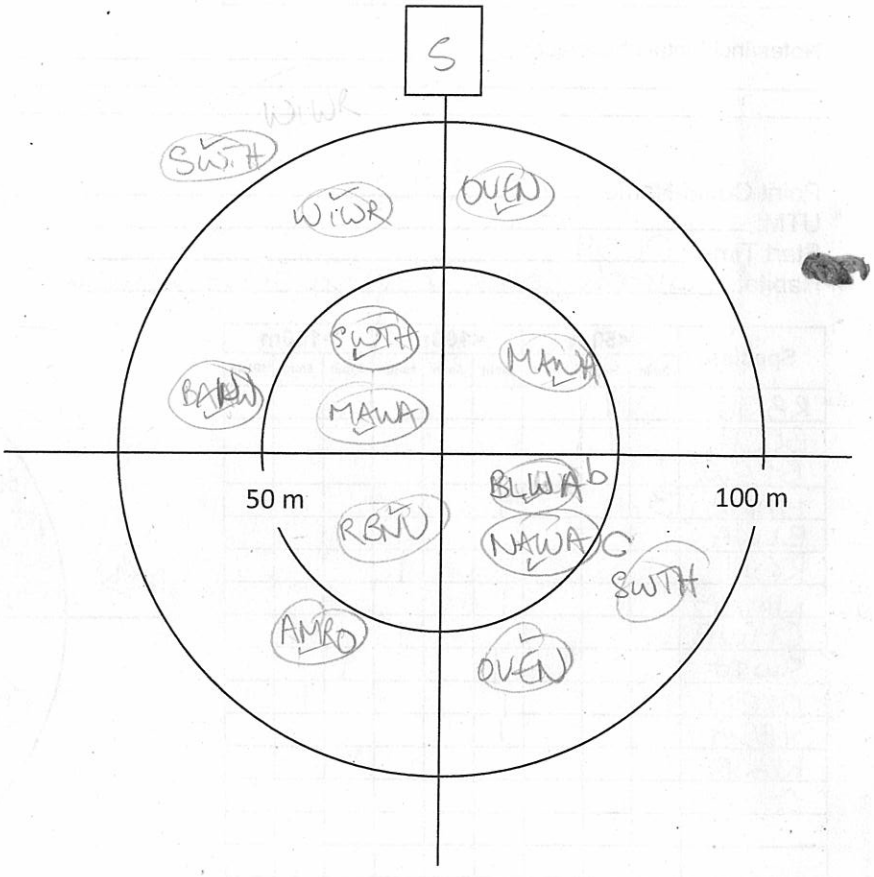

Notes/Incidental observations: _____

Project Number:
Survey Date: 11 June 13

AMEC Earth & Environmental
160 Traders Blvd East, Mississauga, ON L4Z 3K7
Tel: (905) 568-2929
Cell: (416) 459-6228
Fax: (905) 568-1686

Point Count Name: BB 195
UTM:
Start Time 0538
Habitat: Spruce forest & dense beaked hazel + birch

Species	<50m			<100m			>100m		
	3min	5min	10min	3min	5min	10min	3 min	5min	10min
BCCH	1								
REVI	1								
MAWA	1				1				
YBSA						1			
BHVI						1			
NAWA				1		1			
RCKI						1			
NOFL						1			
YRWA				1					
BTBW				1					
SWTH				1					
WIWR									1
HETH									1

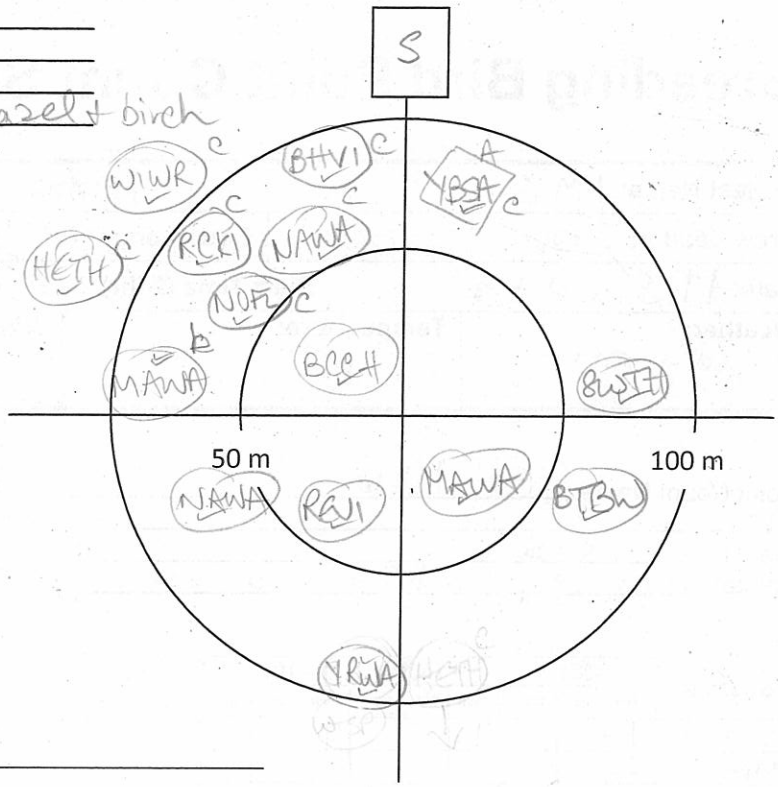

Notes/Incidental observations:

Point Count Name: BB 194
UTM:
Start Time 0604
Habitat: birch forest & spruce sub-canopy

Species	<50m			<100m			>100m		
	3min	5min	10min	3min	5min	10min	3 min	5min	10min
RBNU		1							
BCCH		1							
BTGW	1								
MAWA	3			1					
BLWA						1			
REVI						1			
NAWA				1					
CMWA						1			
SWTH				1			1		
OVEN				1				1	
YBSA				1					
WIWR							1		
COLO									

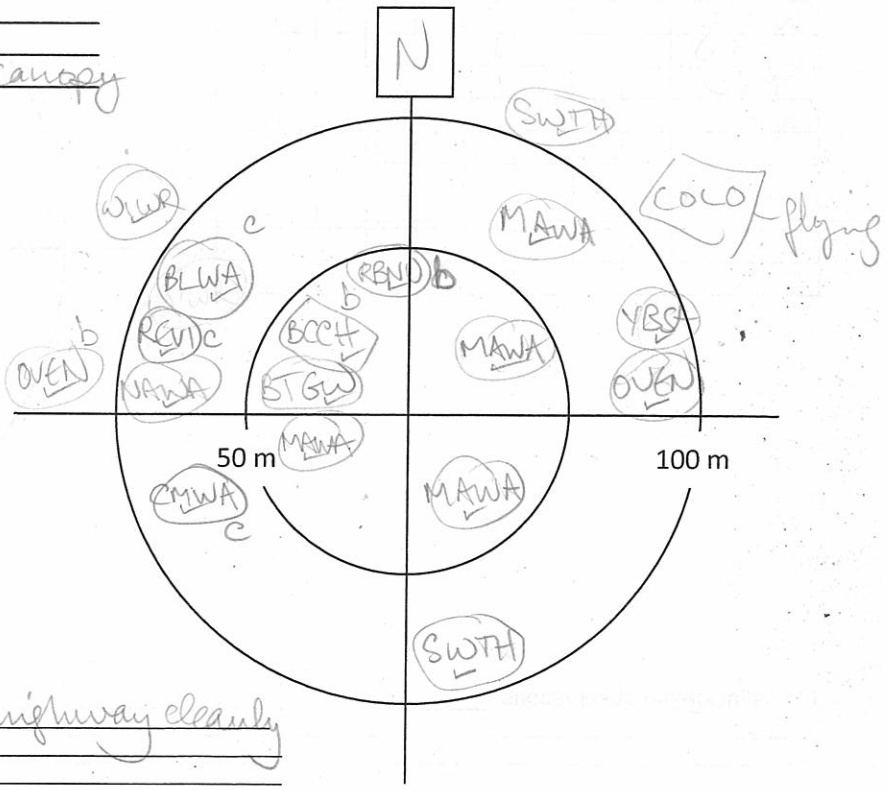

Notes/Incidental observations: Can still hear highway clearly
COLO flying over so NOT listed

AMEC Earth & Environmental
160 Traders Blvd East, Mississauga, ON L4Z 3K7
Tel: (905) 568-2929
Cell: (416) 459-6228
Fax: (905) 568-1686

Project Number:
Survey Date: June 11 '13

Point Count Name: BB 193
UTM:
Start Time 0630
Habitat: spruce forest + birch (mixed)

Species	<50m			<100m			>100m		
	3min	5min	10min	3min	5min	10min	3 min	5min	10min
BTGW	1								
BCCH	1								
OVEN				2			2		
REVI				1	1				
SWTH							1		
WIWR							1		

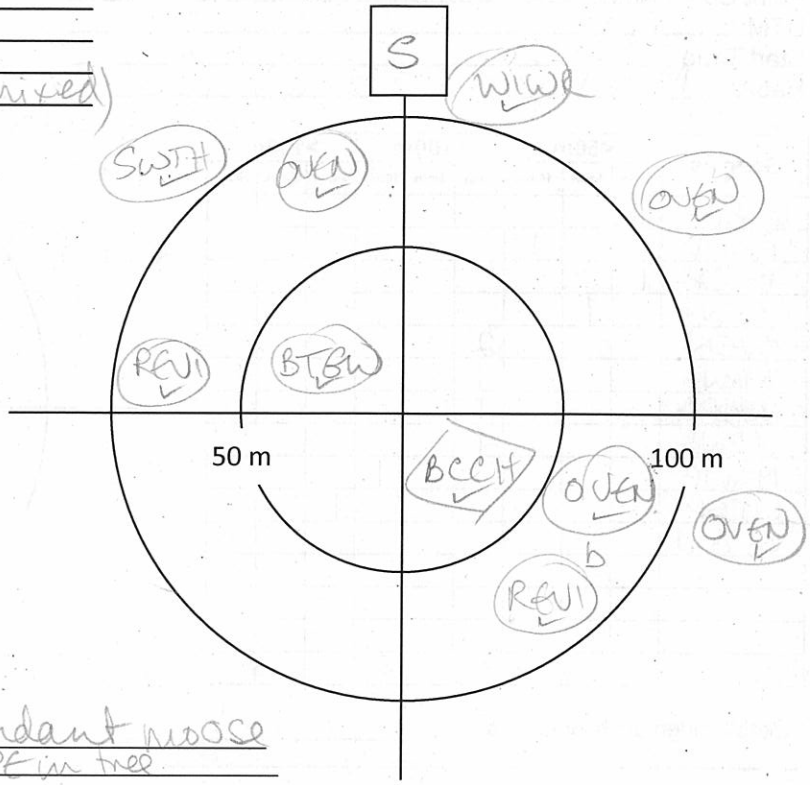

Notes/Incidental observations: red sqrl, abundant moose scat N 100 m from here, SPPE in tree, can still hear highway

Point Count Name: BB 192
UTM:
Start Time 0652
Habitat: coniferous swamp - sphagnum under spruce/birch

Species	<50m			<100m			>100m		
	3min	5min	10min	3min	5min	10min	3 min	5min	10min
NOPA	1								
RBNU	1								
BCCH			1						
NAWA	1	1							
BTGW	1								
OVEN					1				
REVI					1	1			
YRWA						1			
SWTH				1					

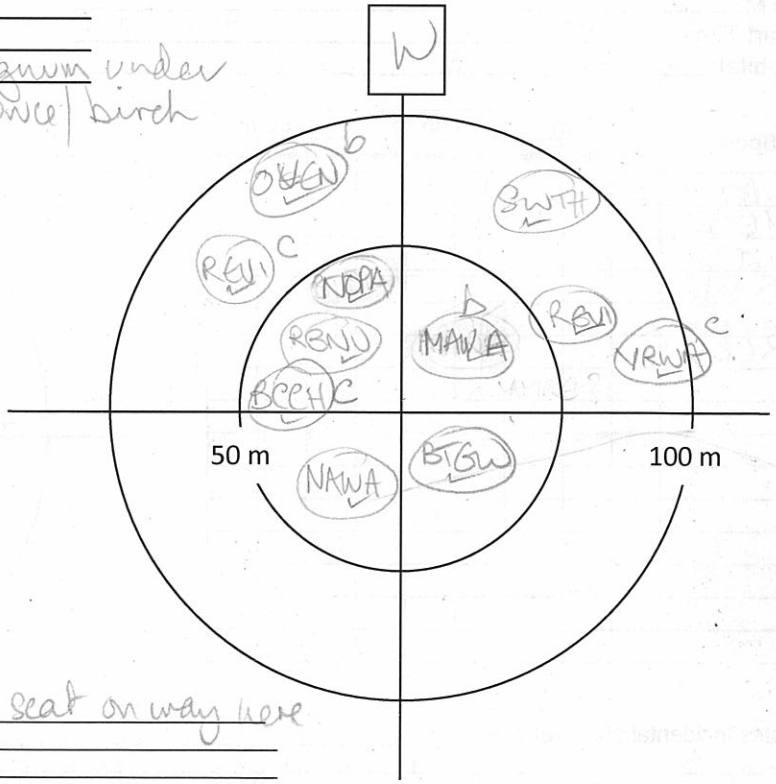

Notes/Incidental observations: red sqrl, moose scat on way here

AMEC Earth & Environmental
160 Traders Blvd East, Mississauga, ON L4Z 3K7
Tel: (905) 568-2929
Cell: (416) 459-6228
Fax: (905) 568-1686

Project Number:
Survey Date: 11 June 13

Point Count Name: BB191
UTM:
Start Time 0720
Habitat: Mixed forest (spruce + birch spruce under + fir

Species	<50m			<100m			>100m		
	3min	5min	10min	3min	5min	10min	3 min	5min	10min
BTBW	2								
RBNU			1						
BCCH	1								
REVI		1							
OVEN				2					
NAWA				1					1
NOPA				1					
YRWA				1					
MAWA						1			
WTSP							1		
BTGW									1

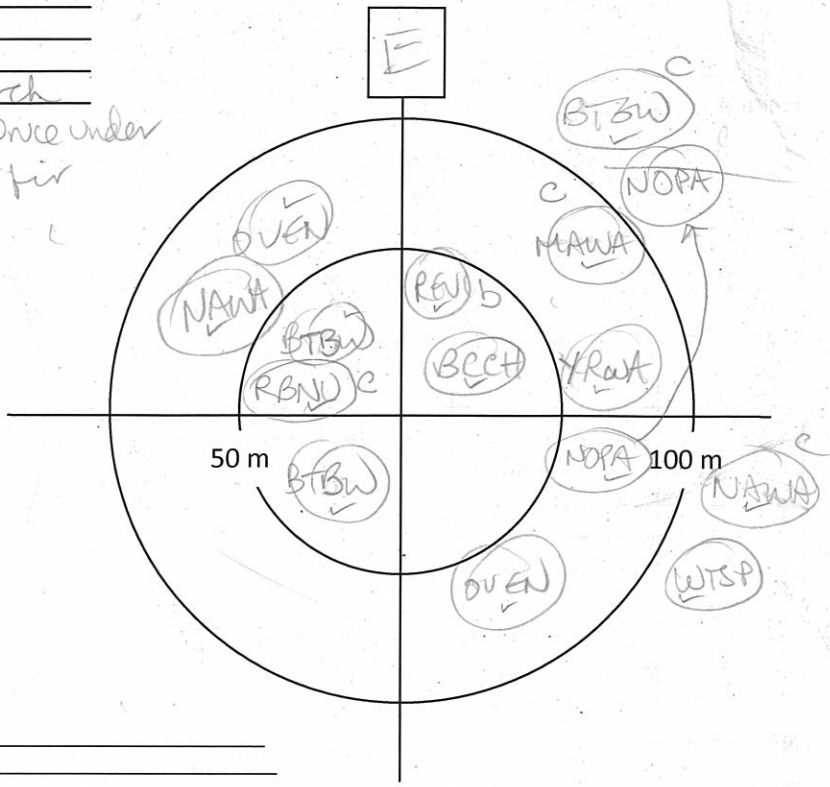

Notes/Incidental observations: moose scat
can still hear highway faintly

Point Count Name: BB190
UTM:
Start Time 0749
Habitat: spruce forest + birch/sphagnum swamp under

Species	<50m			<100m			>100m		
	3min	5min	10min	3min	5min	10min	3 min	5min	10min
NAWA	3			1					
YBFL			1						
WTSP				1					
RBNU				1					
SWTH				1			1		
RCKI				1					

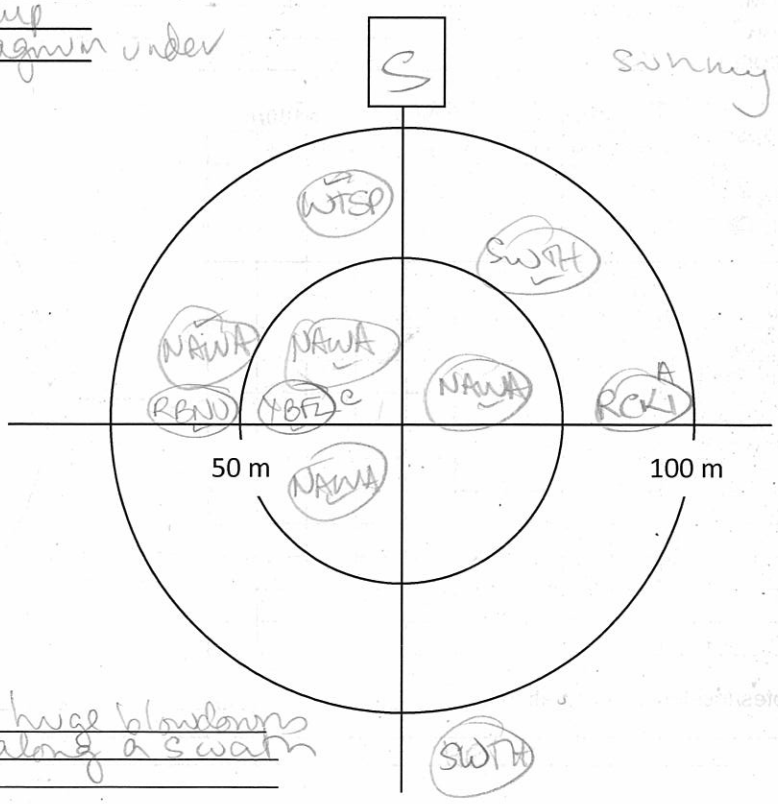

Notes/Incidental observations: RCKI anxious - huge blowdowns in this area - along a swath
Redspr.
hard to walk to point

SPPE

AMEC Earth & Environmental
160 Traders Blvd East, Mississauga, ON L4Z 3K7
Tel: (905) 568-2929
Cell: (416) 459-6228
Fax: (905) 568-1686

Project Number:
Survey Date: 11 June 13

Point Count Name: BB189
UTM:
Start Time 0825
Habitat: Blow down / birch + spruce forest

Species	<50m			<100m			>100m		
	3min	5min	10min	3min	5min	10min	3 min	5min	10min
WIWR	1								
YBFL	1								
BHVI	1								
MAWA	1			1					
NAWA	1			1					
WTSP	1				1				
REVI				1		1			
SWTH				1					

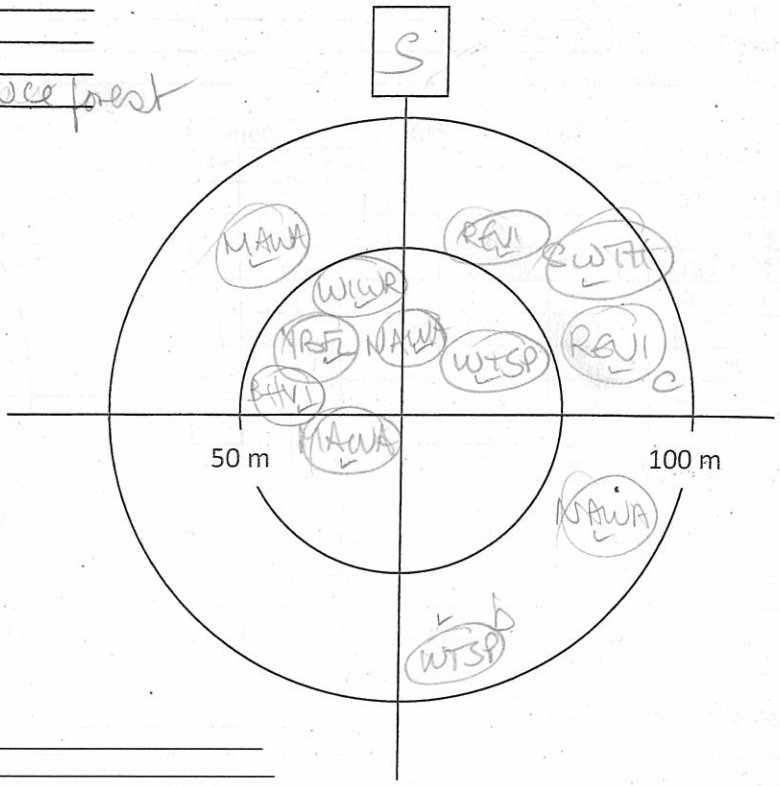

Notes/Incidental observations: Red eyed

Point Count Name: BB184
UTM:
Start Time 0857
Habitat: Black spruce swamp

Species	<50m			<100m			>100m		
	3min	5min	10min	3min	5min	10min	3 min	5min	10min
NAWA	2								
YRWA	1								
WTSP	1								
RCKI				1					
NOFL						1			
WTSP				1					
REVI				1					
SWTH				2			1		
BTGW						1			
COGR						1			
WIWR				1		1		1	

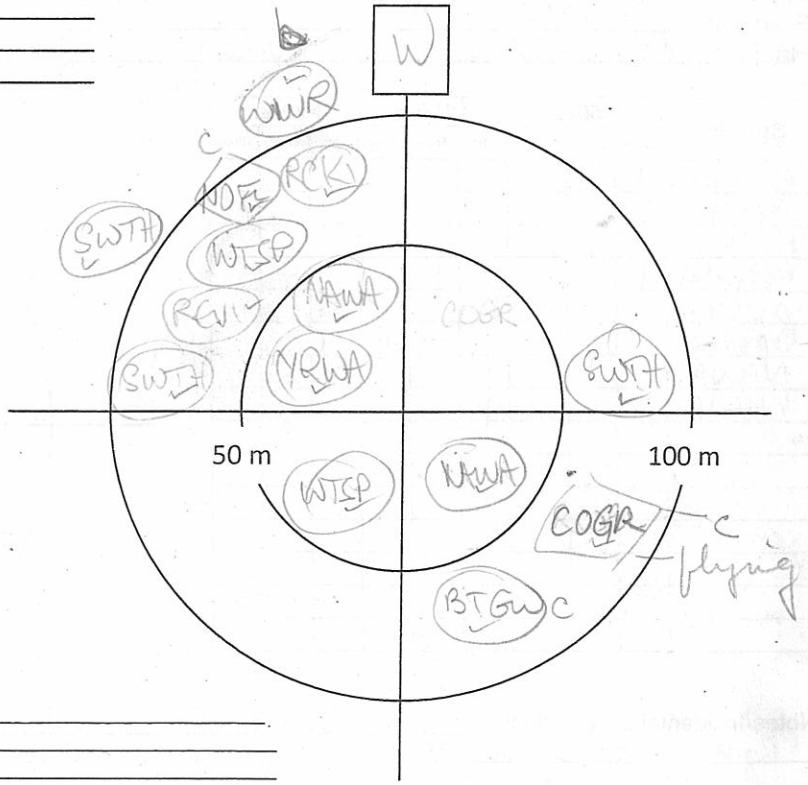

Notes/Incidental observations:

AMEC Earth & Environmental
160 Traders Blvd East, Mississauga, ON L4Z 3K7
Tel: (905) 568-2929
Cell: (416) 459-6228
Fax: (905) 568-1686

Project Number:
Survey Date: 11 June 13

Point Count Name: BB182
UTM:
Start Time 0924
Habitat: Conifer swamp fir and birch

Species	<50m			<100m			>100m		
	3min	5min	10min	3min	5min	10min	3 min	5min	10min
NAWA	1					1			
BTBW	1								
MAWA	1			1					
BLJA				1					
OVEN				1					1
WTSP							1		
SWTH									1

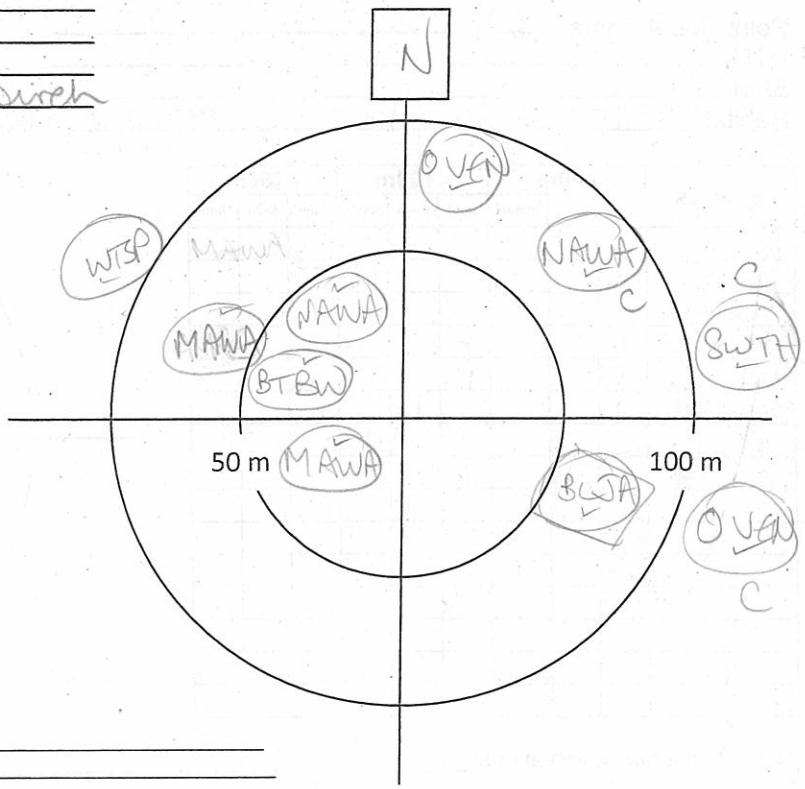

Notes/Incidental observations: Red squ

Point Count Name: BB183
UTM:
Start Time 0950
Habitat: dense balsam fir, poplar, birch (mixed forest) mainly decid

Species	<50m			<100m			>100m		
	3min	5min	10min	3min	5min	10min	3 min	5min	10min
BLWA	1								
REVI	1								
RTHU		1							
MAWA	1			1	1				
OVEN				1					
BAWW						1			
NAWA				1		1			
WIWR				1					

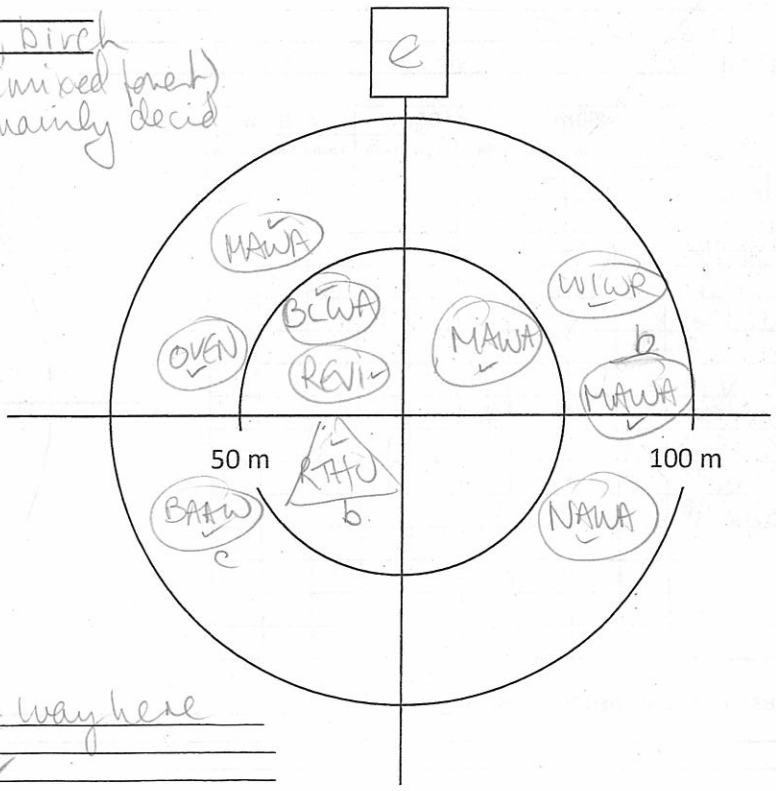

Notes/Incidental observations: moose scat on way here
RTHU buzzed my vest
dense balsam in shrub layer

Project Number:
Survey Date: 4 June 13

AMEC Earth & Environmental
160 Traders Blvd East, Mississauga, ON L4Z 3K7
Tel: (905) 568-2929
Cell: (416) 459-6228
Fax: (905) 568-1686

Point Count Name: BB185
UTM:
Start Time 1020
Habitat: spruce swamp - sphagnum under

Species	<50m			<100m			>100m		
	3min	5min	10min	3min	5min	10min	3 min	5min	10min
NAWA	1			2					
YRWA				1					
RCKI						1			
HETH				1					
OVEN							1		1

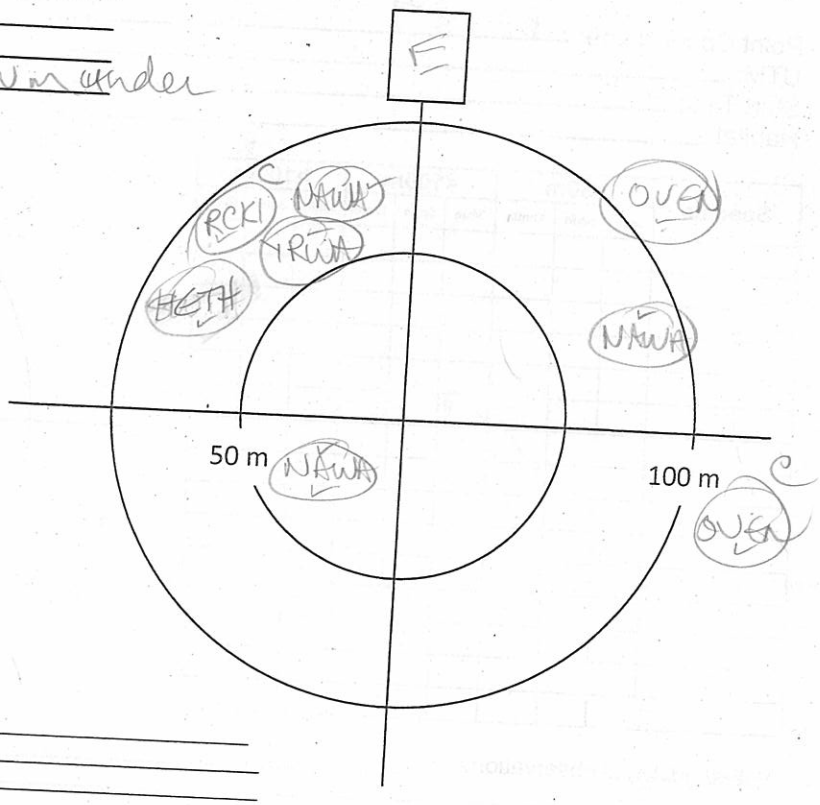

Notes/Incidental observations:

Point Count Name: BB 186
UTM:
Start Time 1050
Habitat: Spruce/fir forest

Species	<50m			<100m			>100m		
	3min	5min	10min	3min	5min	10min	3 min	5min	10min
YBFL	1								
NOPA		1							
MAWA				1					
SWTH				2					
WIWR				1					
BLWA		•		1					

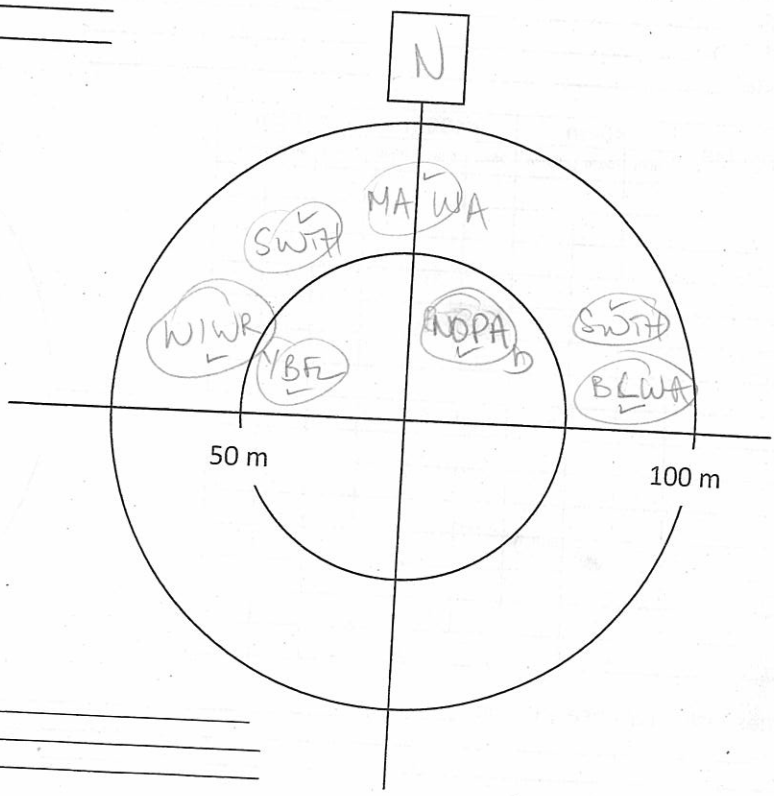

Notes/Incidental observations:

AMEC Earth & Environmental
160 Traders Blvd East, Mississauga, ON L4Z 3K7
Tel: (905) 568-2929
Cell: (416) 459-6228
Fax: (905) 568-1686

Project Number:
Survey Date: 11 June 13

Point Count Name: BB187
UTM:
Start Time
Habitat:

Species	<50m			<100m			>100m		
	3min	5min	10min	3min	5min	10min	3 min	5min	10min

not done

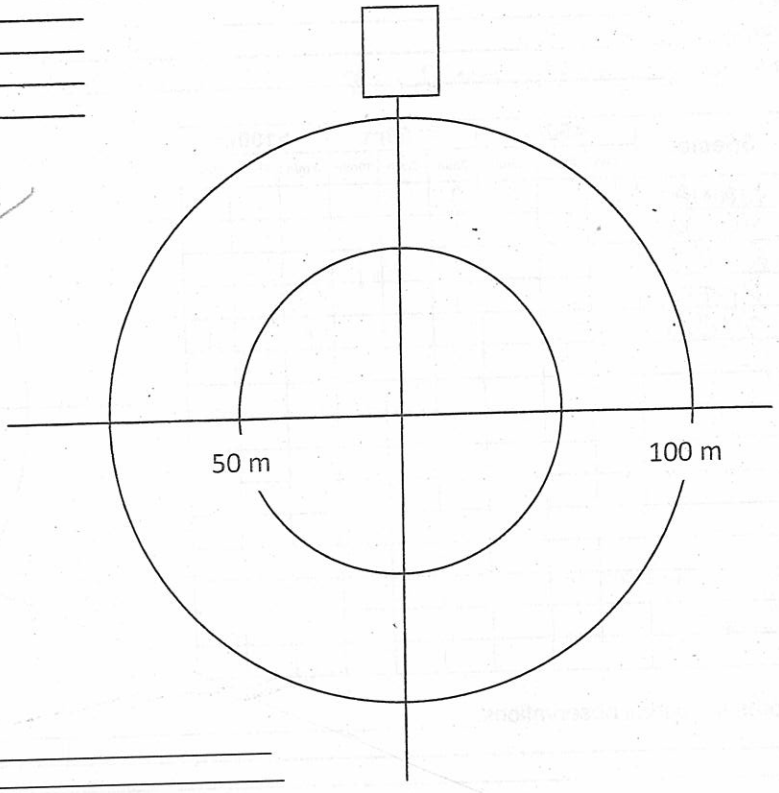

Notes/Incidental observations:

Point Count Name:
UTM:
Start Time
Habitat:

Species	<50m			<100m			>100m		
	3min	5min	10min	3min	5min	10min	3 min	5min	10min

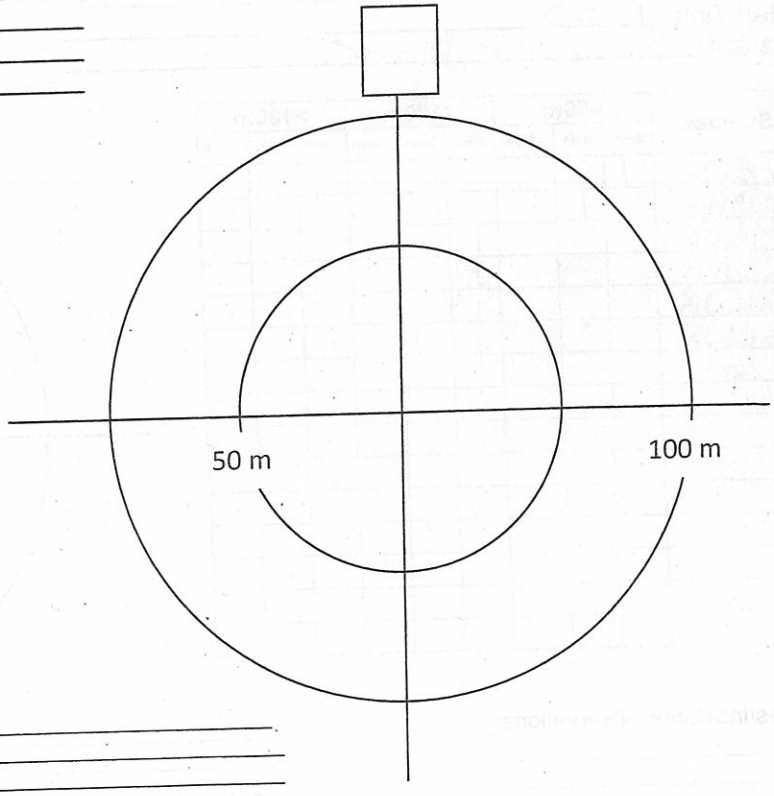

Notes/Incidental observations:

Project Number:
Survey Date: 11 June 13

AMEC Earth & Environmental
160 Traders Blvd East, Mississauga, ON L4Z 3K7
Tel: (905) 568-2929
Cell: (416) 459-6228
Fax: (905) 568-1686

Other Wildlife Observations **Species at Risk

Obs?	Species	Waypoint	Notes
	Virginia Opossum		
	Shrew sp		
	Star-nosed Mole		
	Bat Sp.		
	Eastern Cottontail		
	Snowshoe Hare		
	European Hare		
	Eastern Chipmunk		
	Woodchuck		
	Grey Squirrel		
	Red Squirrel		cougar at point 5
	Flying Squirrel sp		
	Beaver		
	Mouse sp		
	Muskrat		
	Meadow Vole		
	Porcupine		
	Coyote		
	Grey Wolf		
	Red Fox		
	Black Bear		
	Raccoon		
	Mink		
	Striped Skunk		
	White-tailed Deer		
	Moose		abundant winter scat
	Snapping Turtle**		
	Midland Painted Turtle		
	Western Painted Turtle		
	Northern Map Turtle**		
	Blanding's Turtle**		
	Eastern Gartersnake		
	East. Ribbon Snake**		
	Northern Watersnake		
	Redbelly Snake		
	Brown Snake		
	Smooth Greensnake		
	Ringneck Snake		
	Eastern Milksnake**		
	Red-spotted Newt		
	Bl.-spotted Salamander		
	Spotted Salamander		
	Four-toed Salamander		
	Northern Redback		
	American Toad		
	Western Chorus Frog**		
	Boreal Chorus Frog		
	Spring Peeper		occasional calls
	Gray Treefrog		
	Bullfrog*		
	Northern Green Frog		
	Wood Frog		
	Northern Leopard Frog		
	Mink Frog		

Other Species	Waypoint	Notes

Helicopter access, survey points

AMEC Earth & Environmental
160 Traders Blvd East, Mississauga, ON L4Z 3K7
Tel: (905) 568-2929
Cell: (416) 459-6228
Fax: (905) 568-1686

Breeding Bird Point Count Survey

Project Name: IAMGOLD Côté		**Project Number:** TC121522	
Crew Leader: JP	**Observers:** Jon Plizier		
Date: June 12, 2013	**Start Time (24hr):** 08:45	**End Time (24hr):** 12:00	
Weather: 100% cloud.	**Temperature:**	**Wind:**	**Precipitation (Circle):** 0 None, 1 Haze/Fog, 2 Drizzle, 3 Rain

Point Count Name: BB59
UTM: _____
Start Time 08:59
Habitat: SW + P_E + B_w beaked hazel - mm.

Species	<50m			<100m			>100m		
	3min	5min	10min	3min	5min	10min	3 min	5min	10min
BLBW				1					
BTNW				1					
REVI				1					
BTBW	1								
AMRE									
YBSA					11				
SWTH						1			

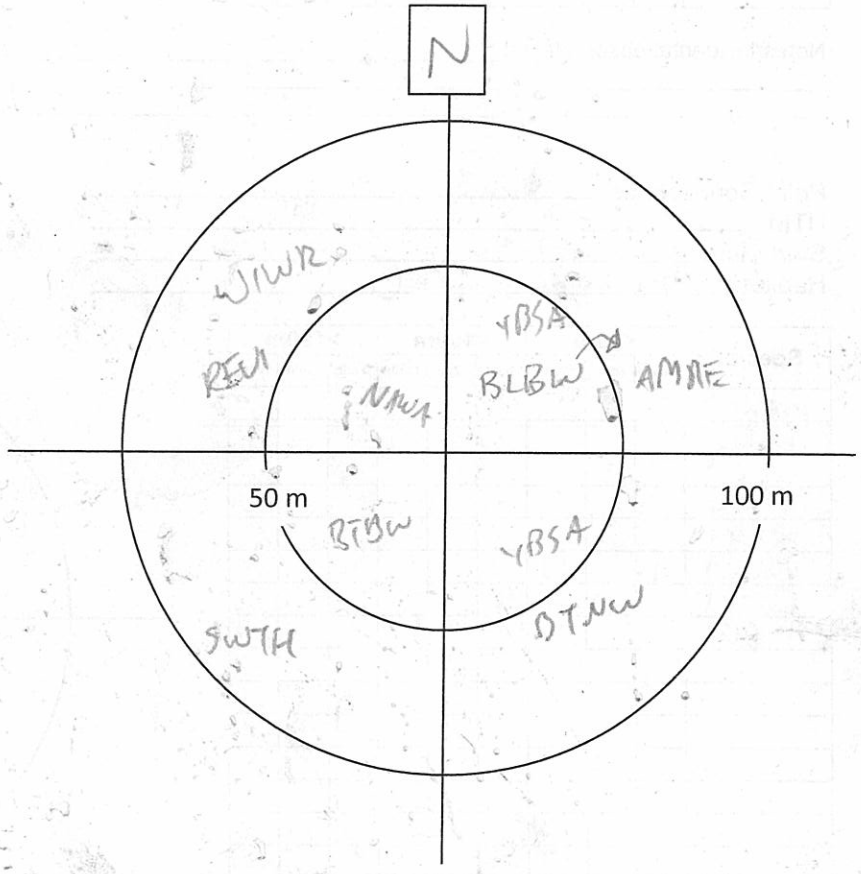

Notes/Incidental observations: RESQ
At dawn - thick fog covering transmission line area - could

Project Number: TC121522
Survey Date: June 12, 2013

AMEC Earth & Environmental
160 Traders Blvd East, Mississauga, ON L4Z 3K7
Tel: (905) 568-2929
Cell: (416) 459-6228
Fax: (905) 568-1686

Point Count Name: BB60
UTM:
Start Time 09:27
Habitat: Mixed Black Spruce > BW
Sparse ground cover, sparse balsam understory, mod. Feathermoss

Species	<50m			<100m			>100m		
	3min	5min	10min	3min	5min	10min	3 min	5min	10min
BCCH				1					
MAWA	1								
NAWA				111					
OVEN	1								
YRWA	1			1					
GCKI		1							

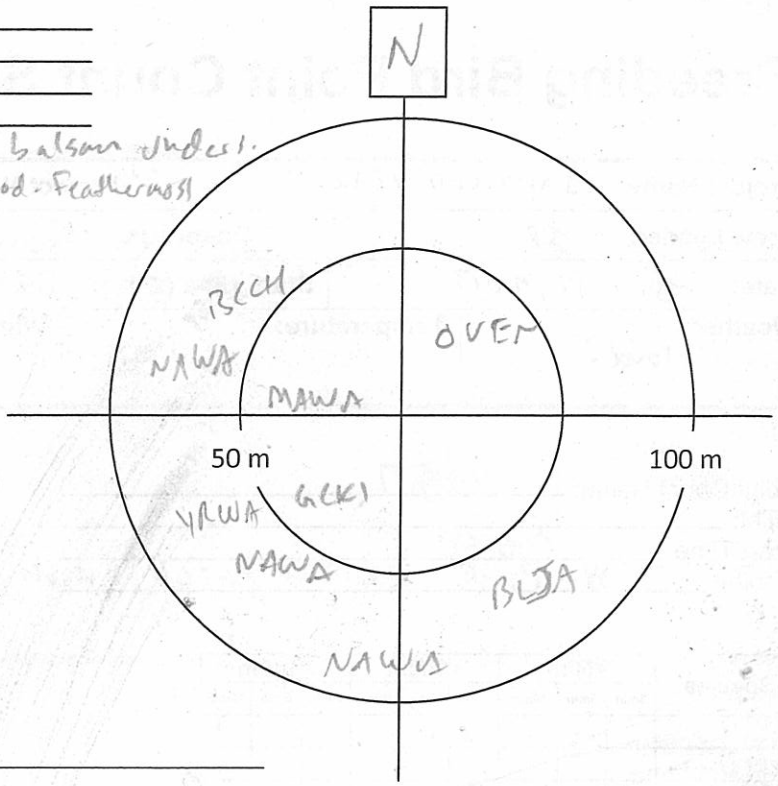

Notes/Incidental observations:

Point Count Name: BB63
UTM:
Start Time 09:56
Habitat: Birch dominated

Species	<50m			<100m			>100m		
	3min	5min	10min	3min	5min	10min	3 min	5min	10min
MAWA	1				1				
LEFL	1								
GCKI	1								
HETH				1					
RCKI				1					
NAWA	1		11						
BCCH				1					
BTBW			1						

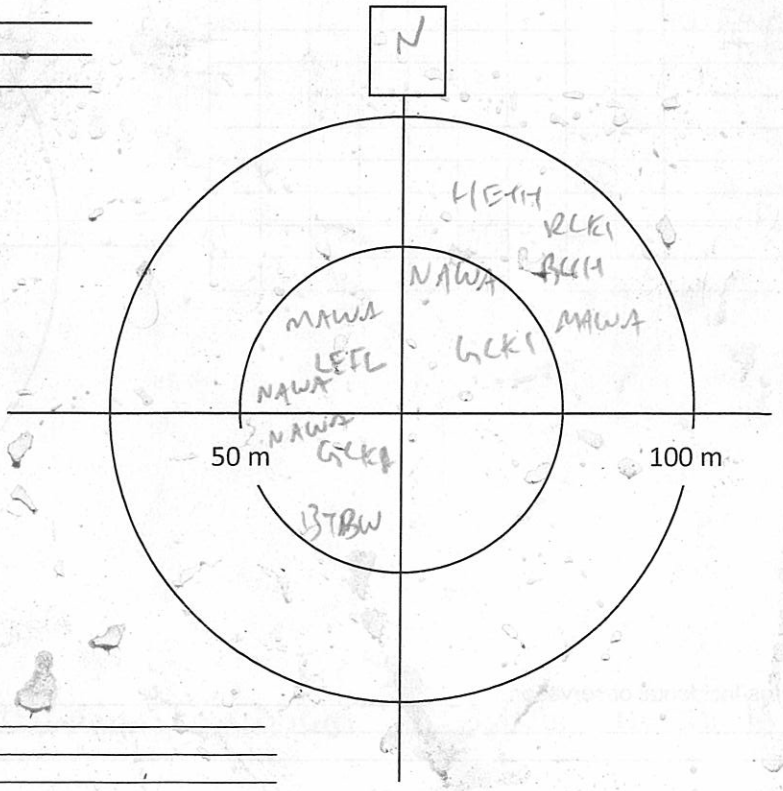

Notes/Incidental observations: RESQ

Project Number: TC121522
Survey Date: June 12, 2013

AMEC Earth & Environmental
160 Traders Blvd East, Mississauga, ON L4Z 3K7
Tel: (905) 568-2929
Cell: (416) 459-6228
Fax: (905) 568-1686

Point Count Name: BB64
UTM:
Start Time 10:21
Habitat: Tall spruce (sparse) birch regen underneath (old burn)

Species	<50m			<100m			>100m		
	3min	5min	10min	3min	5min	10min	3 min	5min	10min
YRWA	1				1				
OVEN					1				
YBSA					1				
RECR									
NWTH						1			
AMRE			1						
GCKI				1					

FO(3)

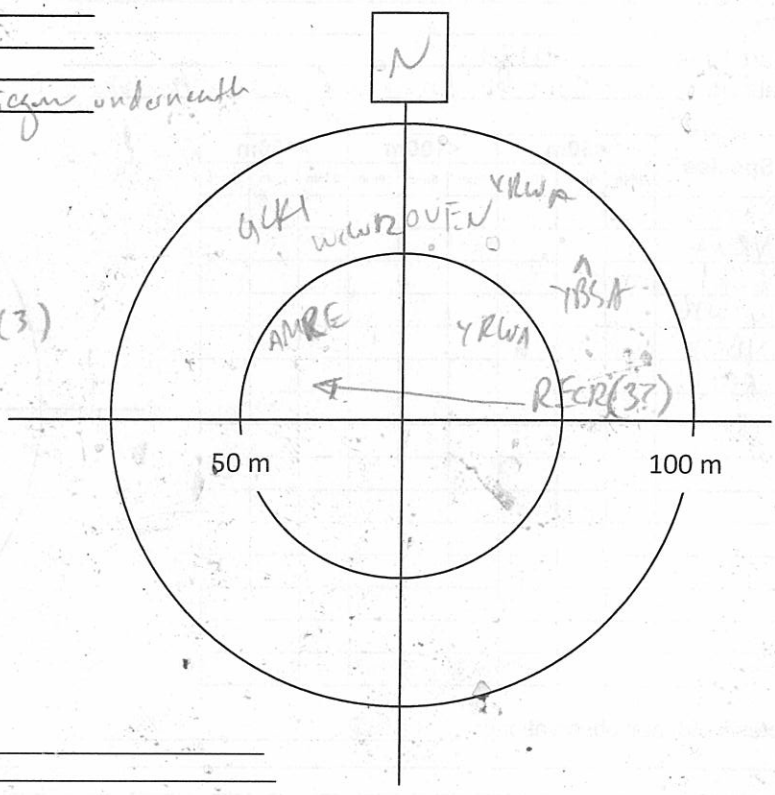

Notes/Incidental observations:

Point Count Name: BB69
UTM:
Start Time 10:50
Habitat: Birch/Aspen regen - very rocky soil - boulders

Species	<50m			<100m			>100m		
	3min	5min	10min	3min	5min	10min	3 min	5min	10min
NAWA				11					
AMRE	1								
MAWA	1								
WTSP			1	1					
PHVI	1								
VEER					1				

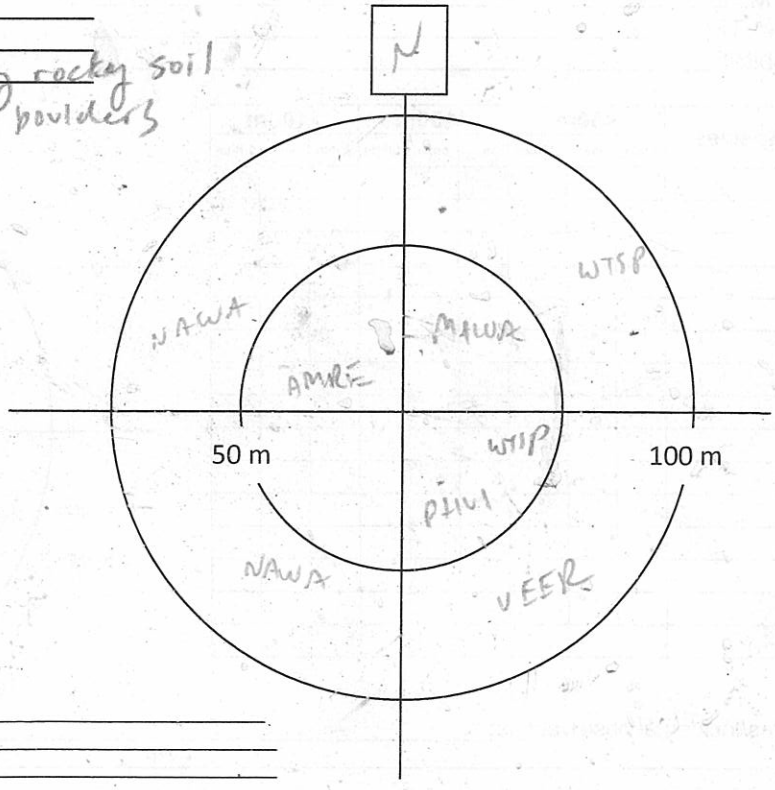

Notes/Incidental observations:

AMEC Earth & Environmental
160 Traders Blvd East, Mississauga, ON L4Z 3K7
Tel: (905) 568-2929
Cell: (416) 459-6228
Fax: (905) 568-1686

Project Number: TC121522
Survey Date: June 12, 2013

Point Count Name: BB67
UTM: _____
Start Time 11:21
Habitat: BW + SW + BF dominated - dense shrubbery BF, beaked hazel.

Species	<50m			<100m			>100m		
	3min	5min	10min	3min	5min	10min	3 min	5min	10min
SWTH				11					
NRWA	1								
GCKI	11								
WIWR	1								
YBSA			1			1			
RBNU						1			

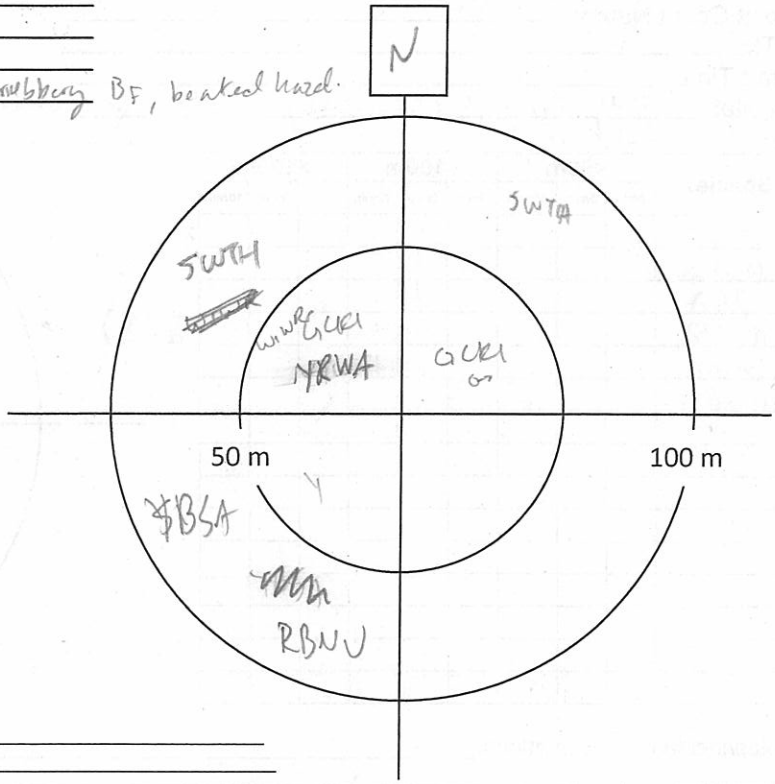

Notes/Incidental observations: RFSQ

Point Count Name: _____
UTM: _____
Start Time _____
Habitat: _____

Species	<50m			<100m			>100m		
	3min	5min	10min	3min	5min	10min	3 min	5min	10min

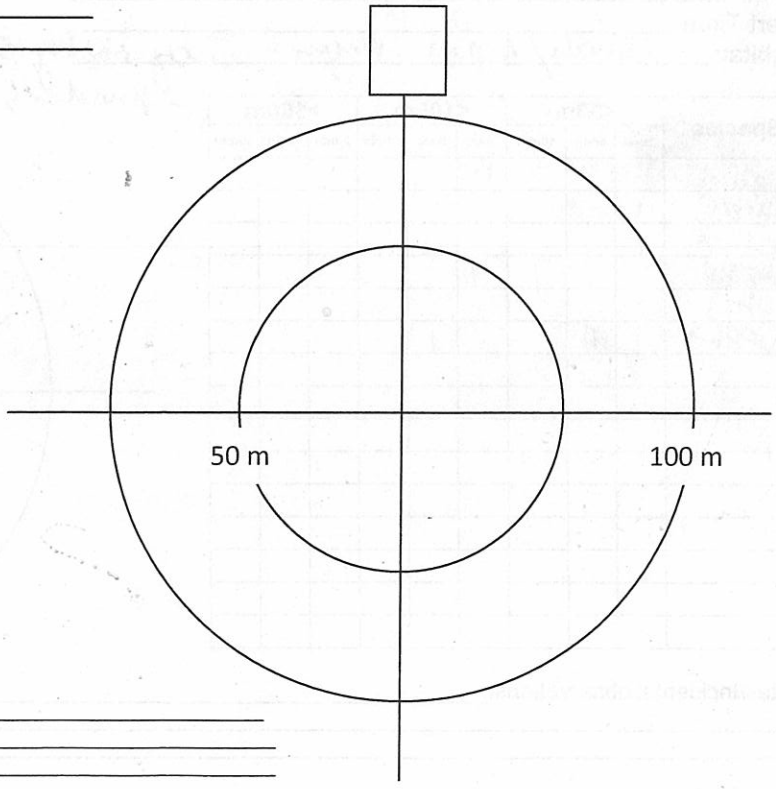

Notes/Incidental observations: _____

WP 234 - landing spot

AMEC Earth & Environmental
160 Traders Blvd East, Mississauga, ON L4Z 3K7
Tel: (905) 568-2929
Cell: (416) 459-6228
Fax: (905) 568-1686

Breeding Bird Point Count Survey

Project Name: IAMGold		**Project Number:** TC121522	
Crew Leader: Jon Pleizier	**Observers:** Sarah Mainfy		
Date: 12 June 13	**Start Time (24hr):** 0830	**End Time (24hr):**	
Weather: cloud, early fog just beginning to lift	**Temperature:** 19	**Wind:** 0	**Precipitation (Circle):** (0) None 1 Haze/Fog 2 Drizzle 3 Rain

Point Count Name: BB118
UTM:
Start Time 0837
Habitat: alder swamp surrounded by spruce/birch forest

Species	<50m			<100m			>100m		
	3min	5min	10min	3min	5min	10min	3 min	5min	10min
REVI	1								
MAWA				2					
BAWW						1			
OVEN				1					
HETH									1
WTSP									1

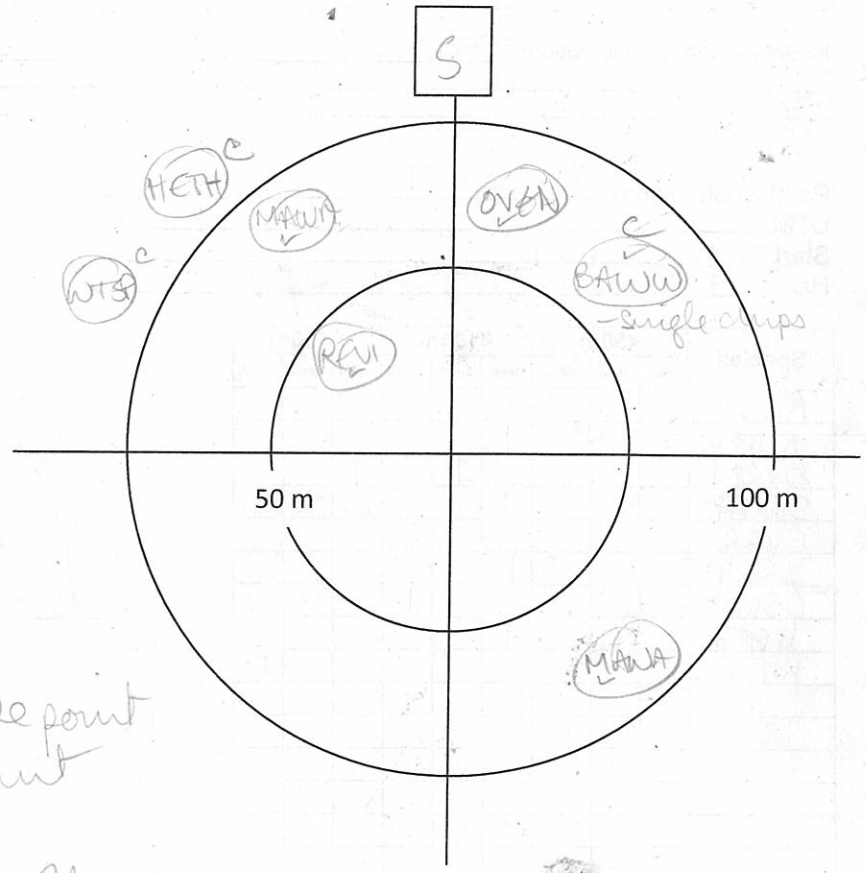

evening grosbeak outside point count

Notes/Incidental observations: helicopter flew off 0830

Project Number: TC121522
Survey Date: 12 June 13

AMEC Earth & Environmental
160 Traders Blvd East, Mississauga, ON L4Z 3K7
Tel: (905) 568-2929
Cell: (416) 459-6228
Fax: (905) 568-1686

Point Count Name: BB 113
UTM:
Start Time 0905
Habitat: mature jack pine & abundant young birch + poplar under

Species	<50m			<100m			>100m		
	3min	5min	10min	3min	5min	10min	3 min	5min	10min
OVEN	1			2				1	
BRCR		1							
WTSP		1							
BTBW			1						
REVI			1						
RBNU					1				
BAWW			1	1					
NAWA				1					

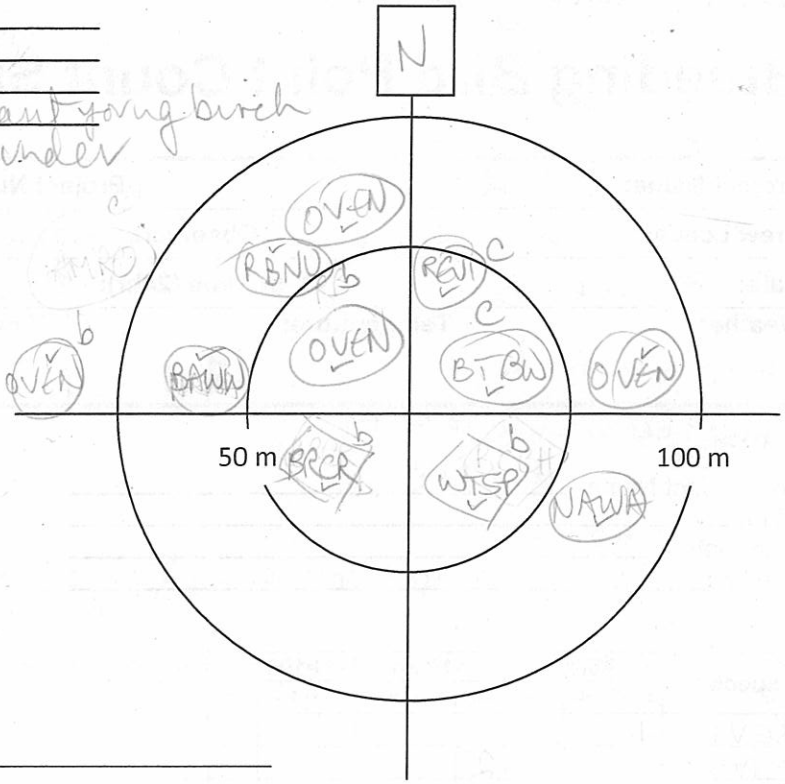

Notes/Incidental observations: SPPE

Point Count Name: BB117
UTM:
Start Time 0927
Habitat: Mature jack pine + poplar

Species	<50m			<100m			>100m		
	3min	5min	10min	3min	5min	10min	3 min	5min	10min
REVI	1								
NAWA	1			1					
OVEN					1		1		
SWTH				1	1				
EVGR						1			
YRWA				1					
CSWA						1			
HETH				1					
WTSP									1

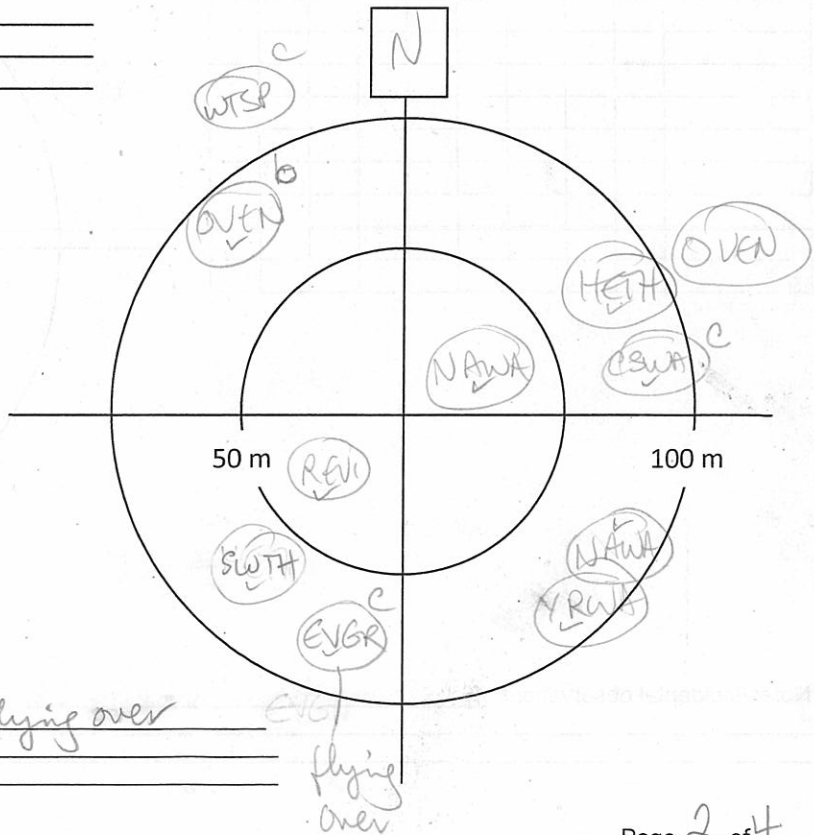

Notes/Incidental observations: Evening Grosbeak flying over - called several times

Project Number: TC121522
Survey Date: 12 June 13

amec
AMEC Earth & Environmental
160 Traders Blvd East, Mississauga, ON L4Z 3K7
Tel: (905) 568-2929
Cell: (416) 459-6228
Fax: (905) 568-1686

Point Count Name: BB122
UTM:
Start Time 0951
Habitat: Mixed forest - birch + Jack pine (tall + mature)

Species	<50m			<100m			>100m		
	3min	5min	10min	3min	5min	10min	3 min	5min	10min
NOPA	1								
BTBW		1							
REVI	2								
YRWA				1					
AMRE	1								
BRCR			1			1			
BLWA				2					
VEER						1			
BTBW						1			
CSWA				1					
WTSP				1					

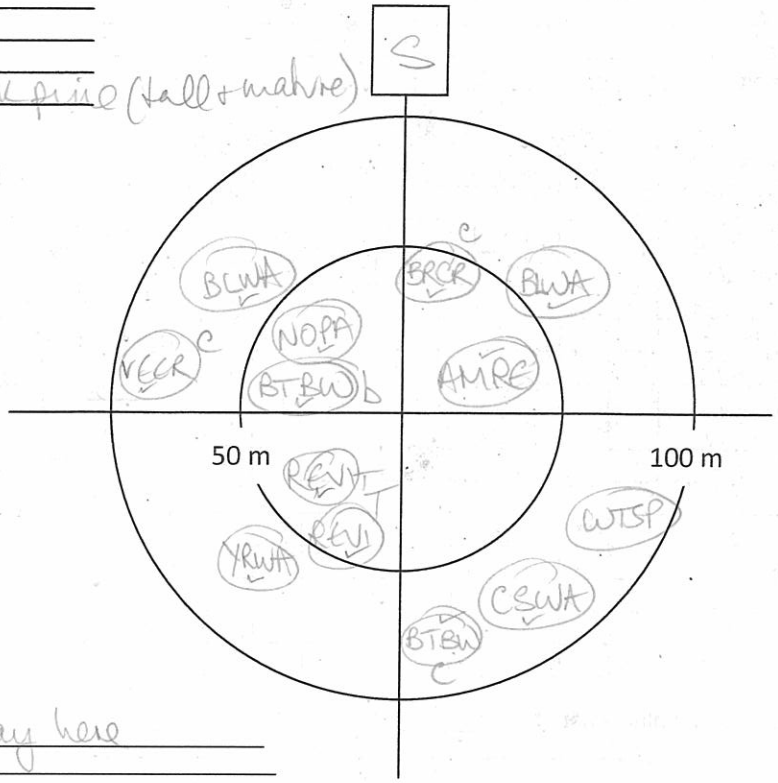

Notes/Incidental observations: Moose scat on way here
BLWA counter singing

Point Count Name: BB123
UTM:
Start Time 1014
Habitat: Poplar + birch forest - dense ACESPIC + OSMCLAY under

Species	<50m			<100m			>100m		
	3min	5min	10min	3min	5min	10min	3 min	5min	10min
LEFL	3								
REVI	5								
OVEN						2			
CSWA				1					
VEER	1			2					
AMRE	1								
AMRO	1			1					
WTSP				1					
HAWO				1					
NOPA				1					
YRWA				1					
COLO									1

on ground/water in distance

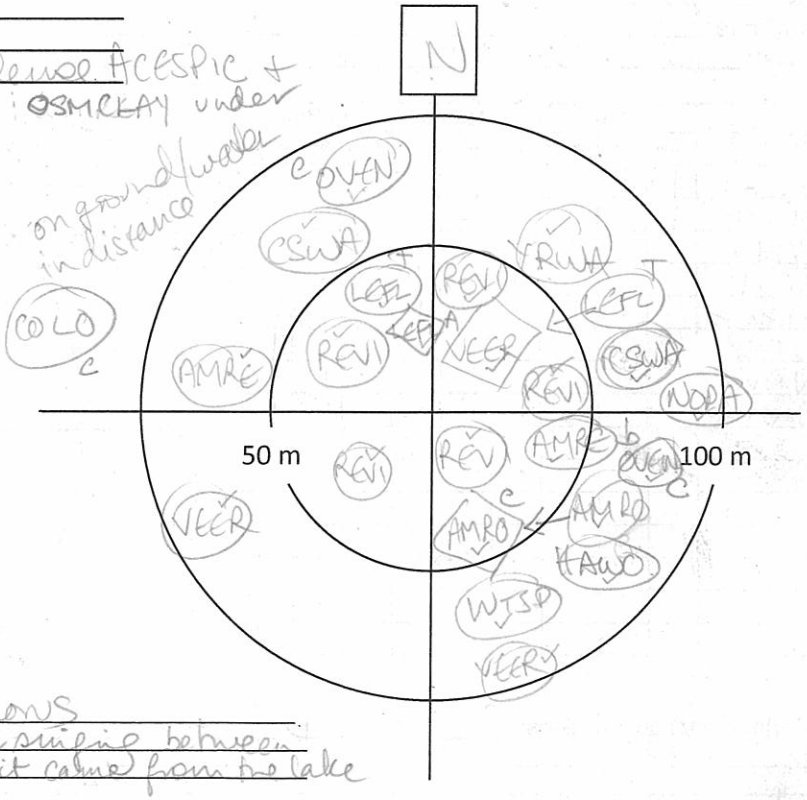

Notes/Incidental observations: insane bird chorus
LEFL very anxious - counter singing between 20→07 COLO sounded as if it came from the lake

Project Number: TC121522
Survey Date: 12 June 13

AMEC Earth & Environmental
160 Traders Blvd East, Mississauga, ON L4Z 3K7
Tel: (905) 568-2929
Cell: (416) 459-6228
Fax: (905) 568-1686

Point Count Name: BB119
UTM: _____
Start Time 1048
Habitat: alder swamp adjacent to decid forest - poplar + birch

Species	<50m			<100m			>100m		
	3min	5min	10min	3min	5min	10min	3 min	5min	10min
BCCH	2								
NAWA	1			1					
REVI						1			1
YRWA				1					
YBSA						1			
CORA									1
OVEN								1	

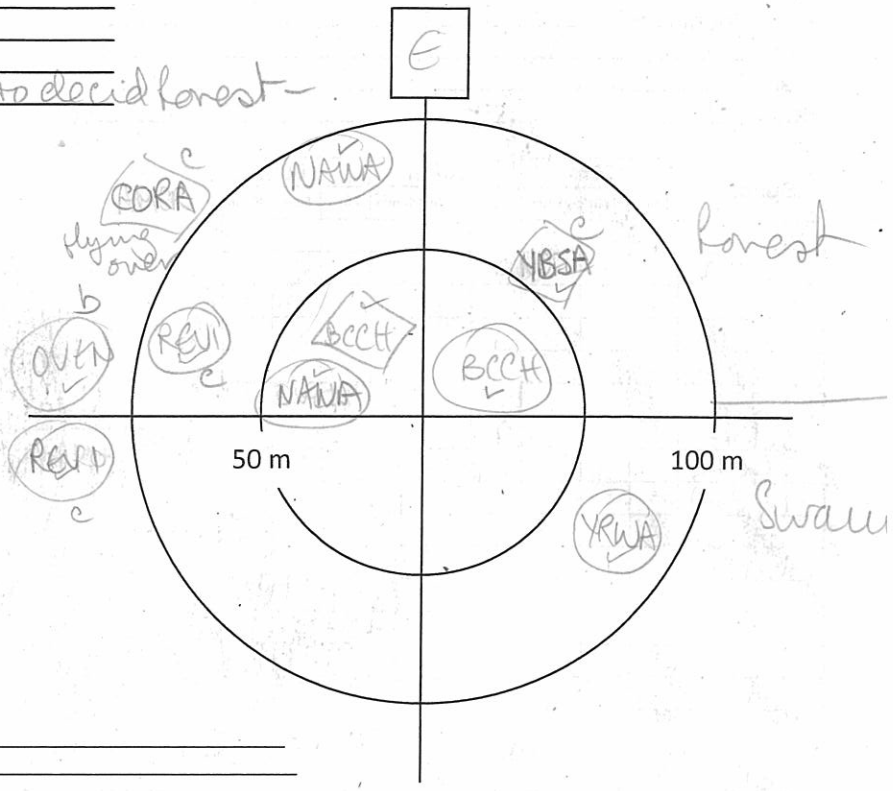

Notes/Incidental observations: _____

Point Count Name: BB120
UTM: _____
Start Time 1110
Habitat: alder + balsam fir swamp

Species	<50m			<100m			>100m		
	3min	5min	10min	3min	5min	10min	3 min	5min	10min
GCKI	1								
BLWA	1								
OVEN				1					
REVI				1					
MAWA					1	1			
WTSP									1
NAWA								1	
SWTH									1

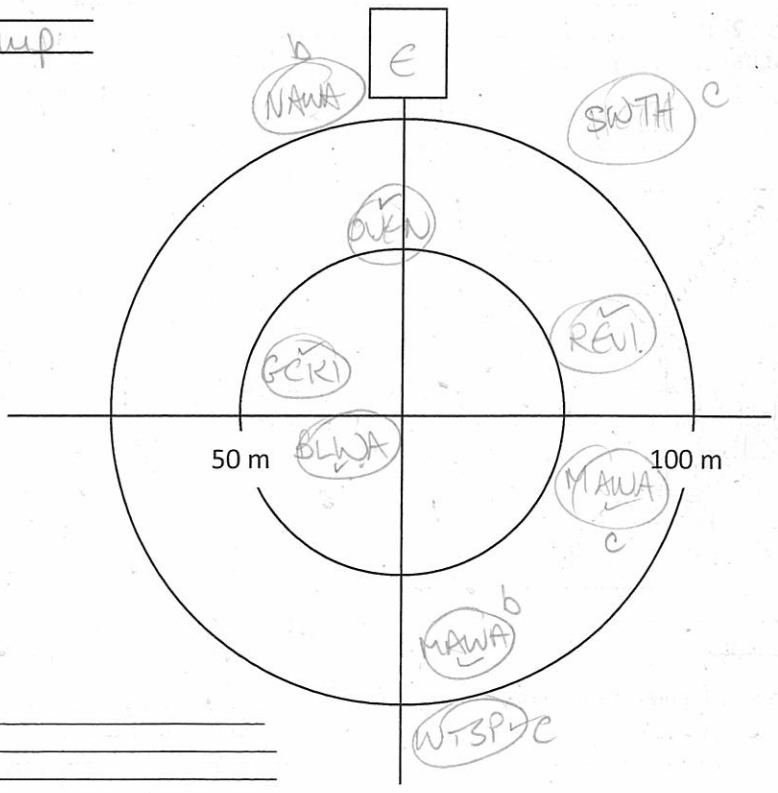

Notes/Incidental observations: _____

AMEC Earth & Environmental
160 Traders Blvd East, Mississauga, ON L4Z 3K7
Tel: (905) 568-2929
Cell: (416) 459-6228
Fax: (905) 568-1686

Breeding Bird Point Count Survey

Project Name: IAMGOLD		Project Number: TC121522	
Crew Leader: JP	Observers: Jon Pleizier		
Date: June 13, 2013	Start Time (24hr): 07:40	End Time (24hr): 07:30	
Weather: 100% cloud. Fog earlier in day.	Temperature:	Wind: 3	Precipitation (Circle): 0 None, (1) Haze/Fog, 2 Drizzle, 3 Rain

Fog Delay - EABL @ wpt 157 - nest in birch cavity, LISP, CSWA, LEFL, WTSP

Point Count Name: BB59
UTM:
Start Time 07:54
Habitat:

- Landed @ lake - 3 COME on lake, 1 ♂ RNDU
- Previous day - MERL on lake

Species	<50m			<100m			>100m		
	3min	5min	10min	3min	5min	10min	3 min	5min	10min
NAWA	1								
REVI	1								
GCKI		1							
NOPA					1				
YBSA					1				
BLBW	1								
BTBW				11					
MAWA						1			

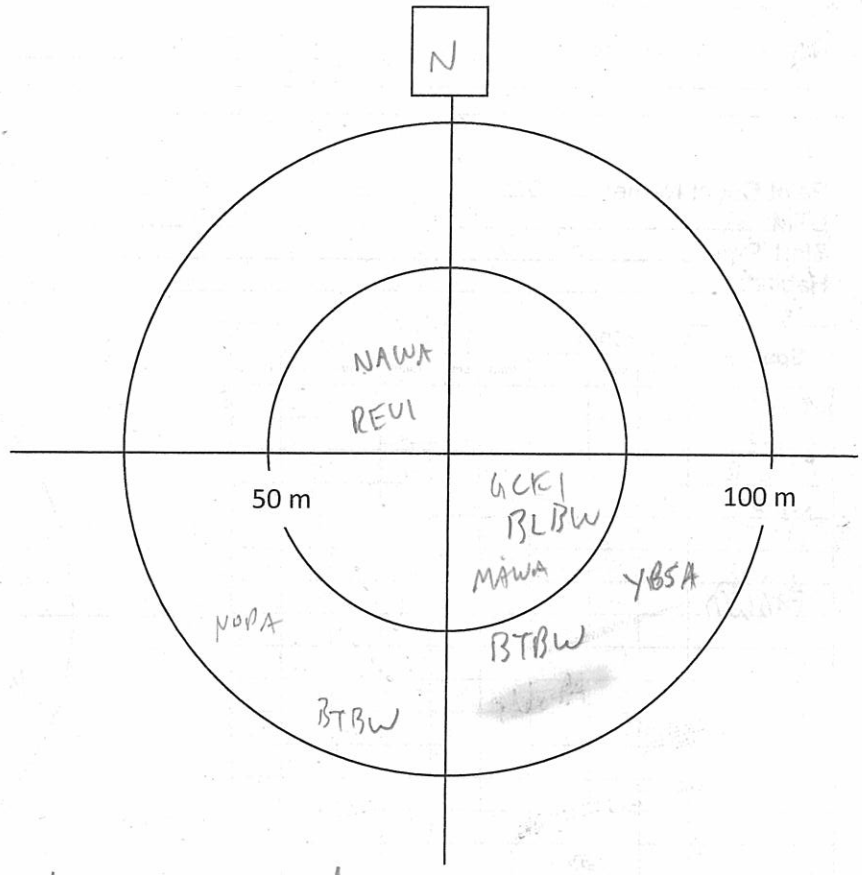

Notes/Incidental observations: RESQ, Mouse droppings on route.

Prev. Day - ♂ moose @ wpt 158

RNDU, HOME on many lakes.

Project Number: TC121522
Survey Date: June 13, 2013

AMEC Earth & Environmental
160 Traders Blvd East, Mississauga, ON L4Z 3K7
Tel: (905) 568-2929
Cell: (416) 459-6228
Fax: (905) 568-1686

Point Count Name: BB60
UTM: 0
Start Time 08:15
Habitat:

Species	<50m			<100m			>100m		
	3min	5min	10min	3min	5min	10min	3 min	5min	10min
NAWA	1								
OVEN	1								
GCKI			1						
MAWA						1			

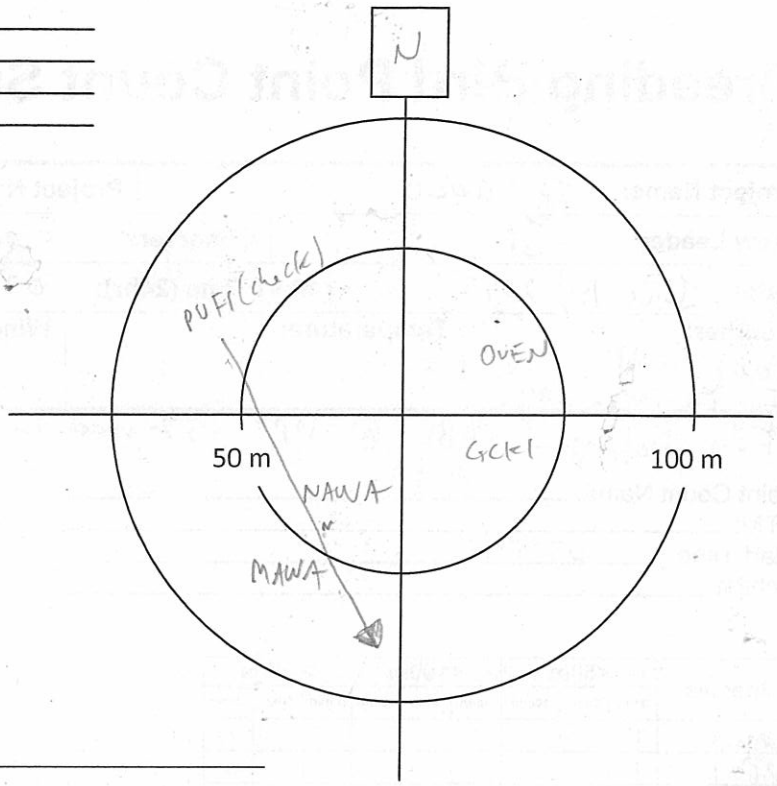

Notes/Incidental observations:

Point Count Name: BB63
UTM:
Start Time 08:47
Habitat:

Species	<50m			<100m			>100m		
	3min	5min	10min	3min	5min	10min	3 min	5min	10min
RBNW				1					
BLJA				1					
WIWR				1					
NAWA	1								
HETH	1								
GCKI			1						
MAWA						1			

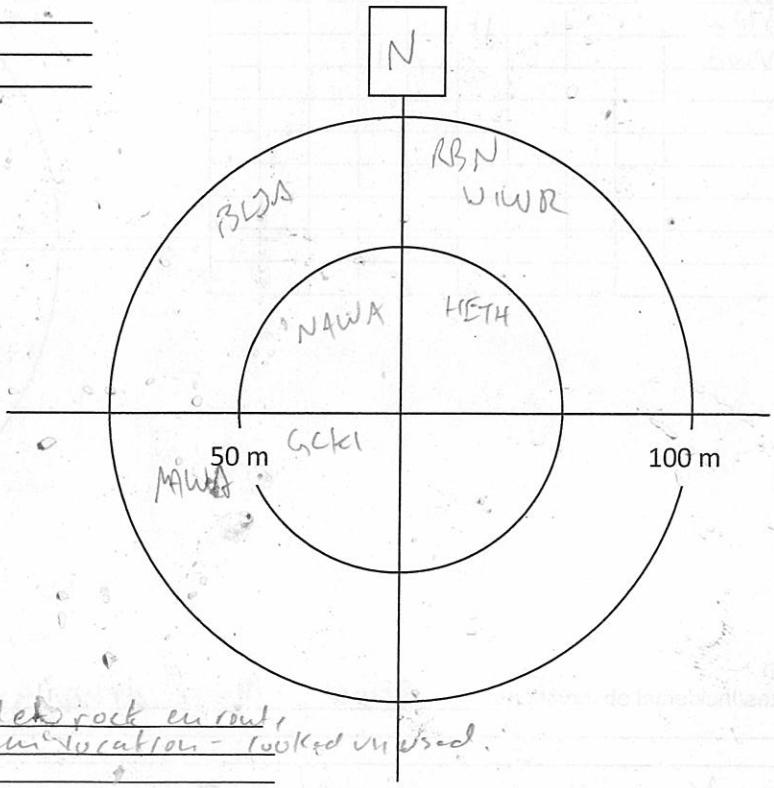

Notes/Incidental observations: - large space under rock on road,
- possible bear den location - looked unused.

AMEC Earth & Environmental
160 Traders Blvd East, Mississauga, ON L4Z 3K7
Tel: (905) 568-2929
Cell: (416) 459-6228
Fax: (905) 568-1686

Project Number: TC121522
Survey Date: June 13, 2013

Point Count Name: BB64
UTM: _____
Start Time 09:15
Habitat: _____

Species	<50m			<100m			>100m		
	3min	5min	10min	3min	5min	10min	3 min	5min	10min

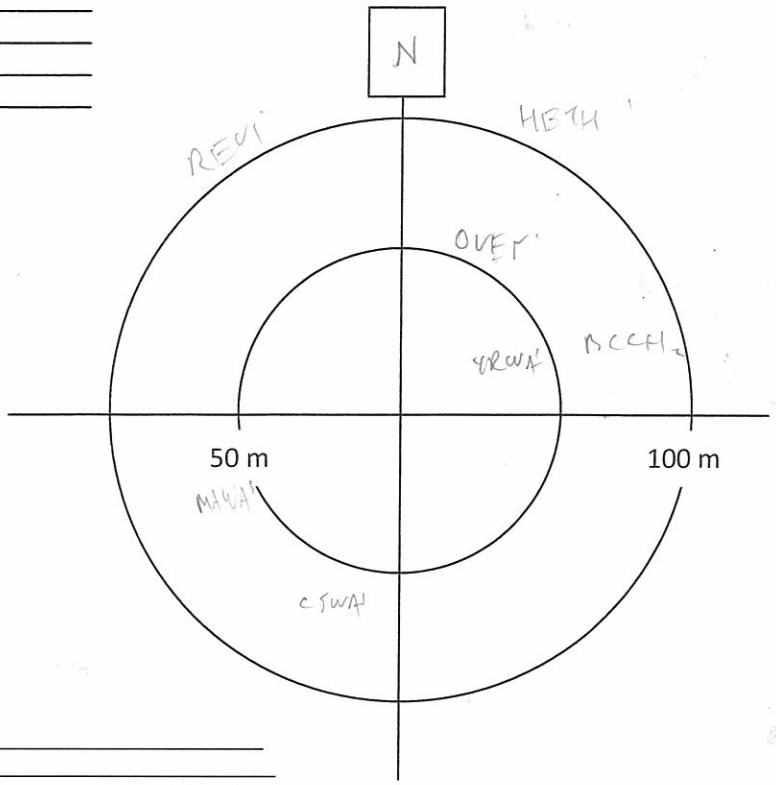

Notes/Incidental observations: _____

Point Count Name: BB65
UTM: _____
Start Time 09:41
Habitat: Mixed Hardwood - R. Maple / Birch

Species	<50m			<100m			>100m		
	3min	5min	10min	3min	5min	10min	3 min	5min	10min
BTBW				1					
GCKI	1								
BLBW	1								
SUTA								1	
OVEN		1							
MAWA						1			
RTVI			1			1			

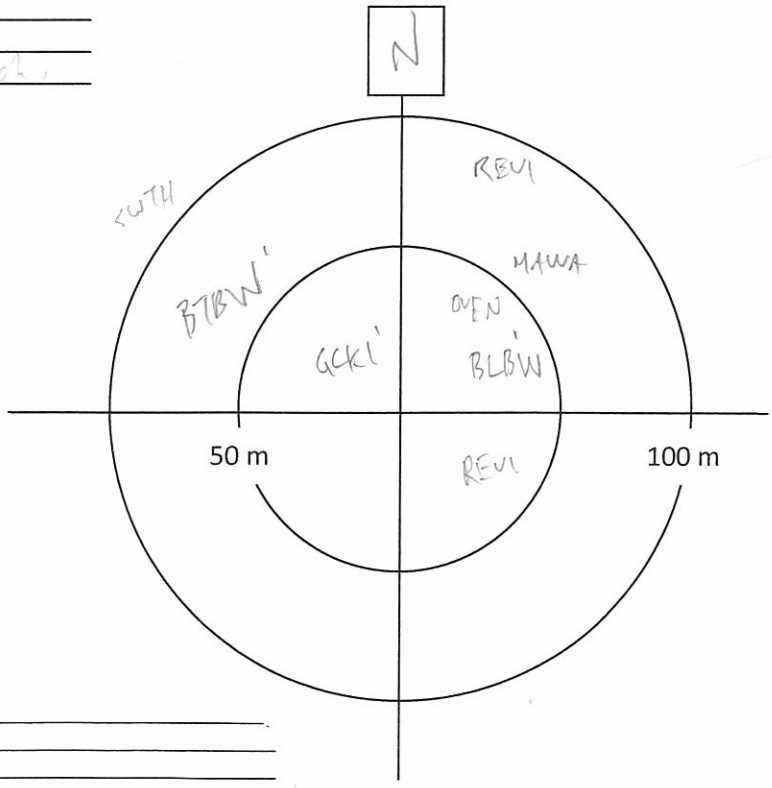

Notes/Incidental observations: _____

Project Number: TC121527
Survey Date: June 13, 2013

AMEC Earth & Environmental
160 Traders Blvd East, Mississauga, ON L4Z 3K7
Tel: (905) 568-2929
Cell: (416) 459-6228
Fax: (905) 568-1686

Point Count Name: BB69
UTM: wpt 162 (EH14)
Start Time 10:10
Habitat: Birch dom, R maple, m.m. hazel

Species	<50m			<100m			>100m		
	3min	5min	10min	3min	5min	10min	3 min	5min	10min

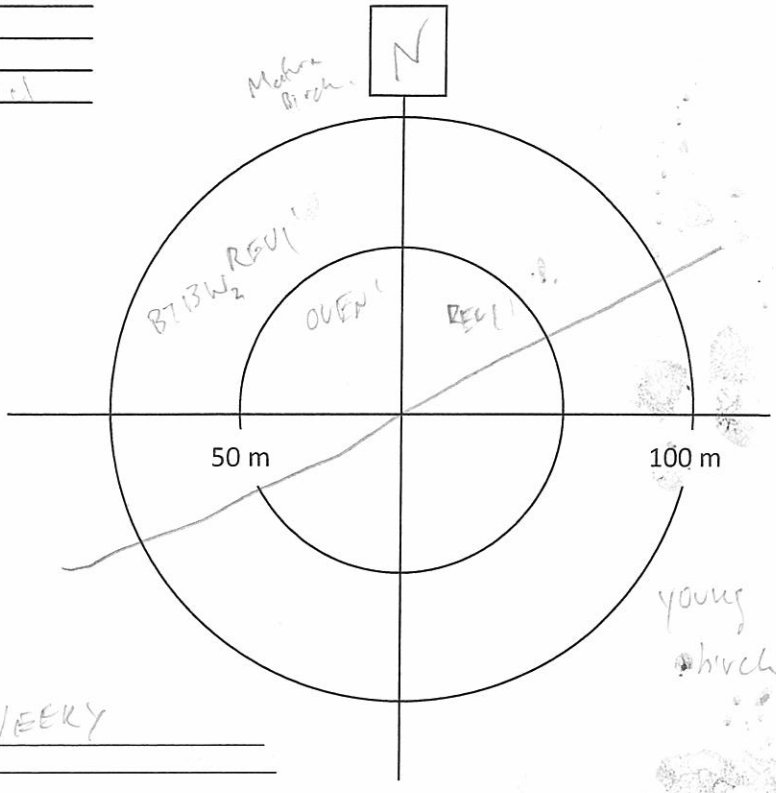

Notes/Incidental observations: en route - 2 VEERY

Point Count Name: BB68
UTM: wpt 163 (EH14)
Start Time 10:30
Habitat:

Species	<50m			<100m			>100m		
	3min	5min	10min	3min	5min	10min	3 min	5min	10min
MAWA	M			M					
SWTH				1					
HETH							1		
NAWA						1			

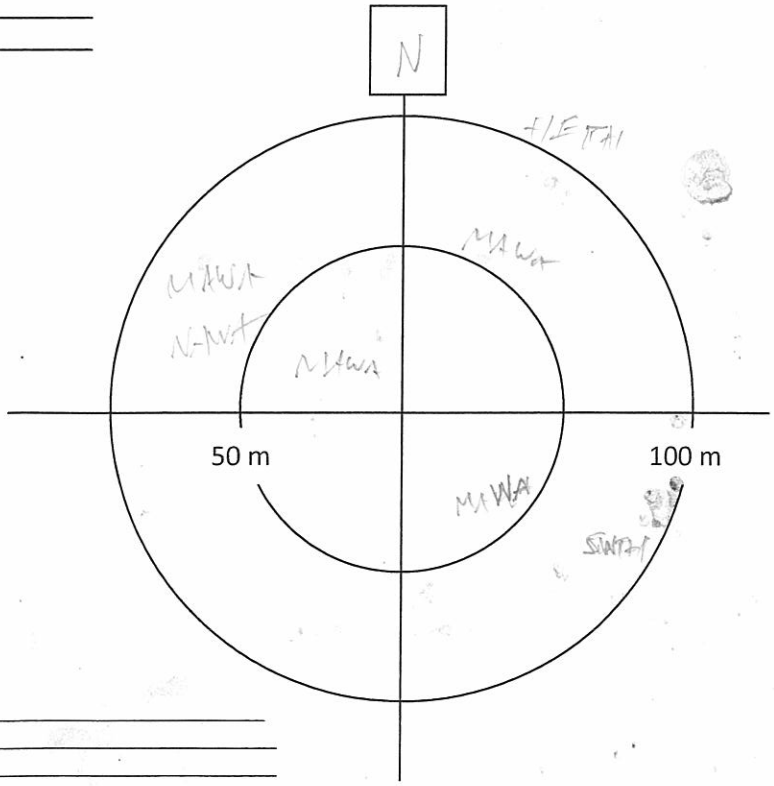

Notes/Incidental observations:

Project Number: 4C121522
Survey Date: June 13, 2013

AMEC Earth & Environmental
160 Traders Blvd East, Mississauga, ON L4Z 3K7
Tel: (905) 568-2929
Cell: (416) 459-6228
Fax: (905) 568-1686

Point Count Name: BD67
UTM: _____
Start Time 11:01
Habitat: _____

Species	<50m			<100m			>100m		
	3min	5min	10min	3min	5min	10min	3 min	5min	10min
LEFL									
NAWA									

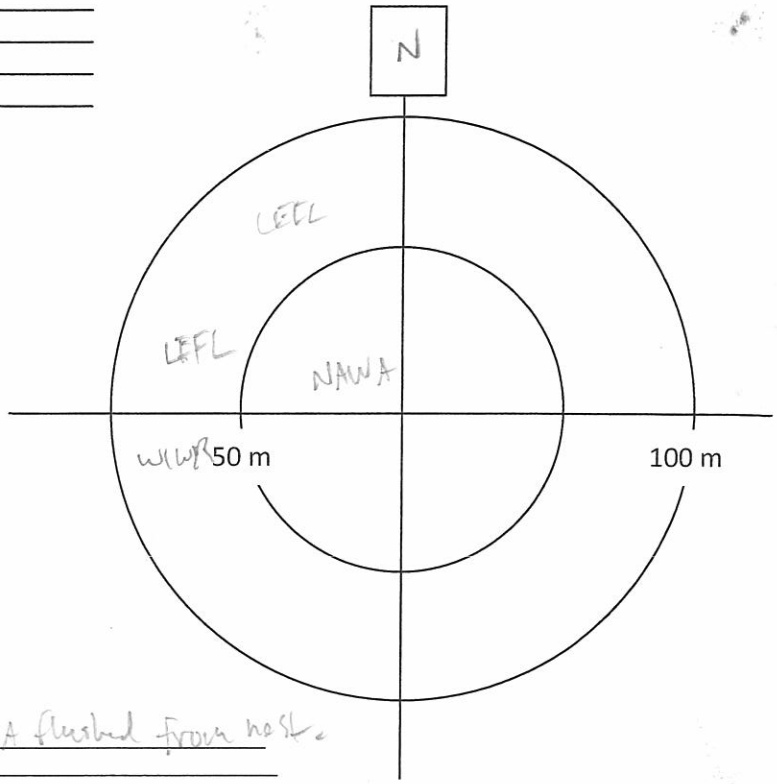

Notes/Incidental observations: en route - NAWA flushed from nest.
_____
_____

Point Count Name: _____
UTM: _____
Start Time _____
Habitat: _____

Species	<50m			<100m			>100m		
	3min	5min	10min	3min	5min	10min	3 min	5min	10min

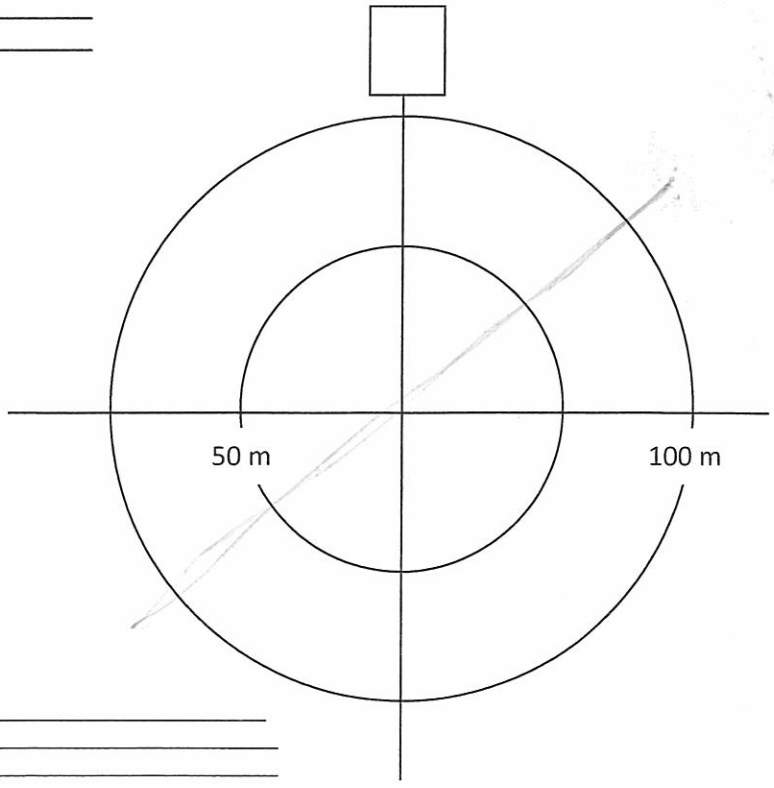

Notes/Incidental observations: _____
_____
_____

AMEC Earth & Environmental
160 Traders Blvd East, Mississauga, ON L4Z 3K7
Tel: (905) 568-2929
Cell: (416) 459-6228
Fax: (905) 568-1686

Breeding Bird Point Count Survey

Project Name: IAMGold		**Project Number:** TC121522	
Crew Leader: Jon Pleizier	**Observers:** Sarah Mainguy		
Date: 13 June 13	**Start Time (24hr):** 0545	**End Time (24hr):**	
Weather: cloudy c some sun	**Temperature:** 15°C	**Wind:** 0	**Precipitation (Circle):** (0) None 1 Haze/Fog 2 Drizzle 3 Rain

Point Count Name: BB118
UTM: _____
Start Time 0558
Habitat: Mixed forest - Jack pine + poplar + birch (mature)

Species	<50m			<100m			>100m		
	3min	5min	10min	3min	5min	10min	3 min	5min	10min
MAWA			1						
WTSP	1						1		
REVI			1				1		
VEER	1								
SWTH				1					
BTBW						1			
RC									

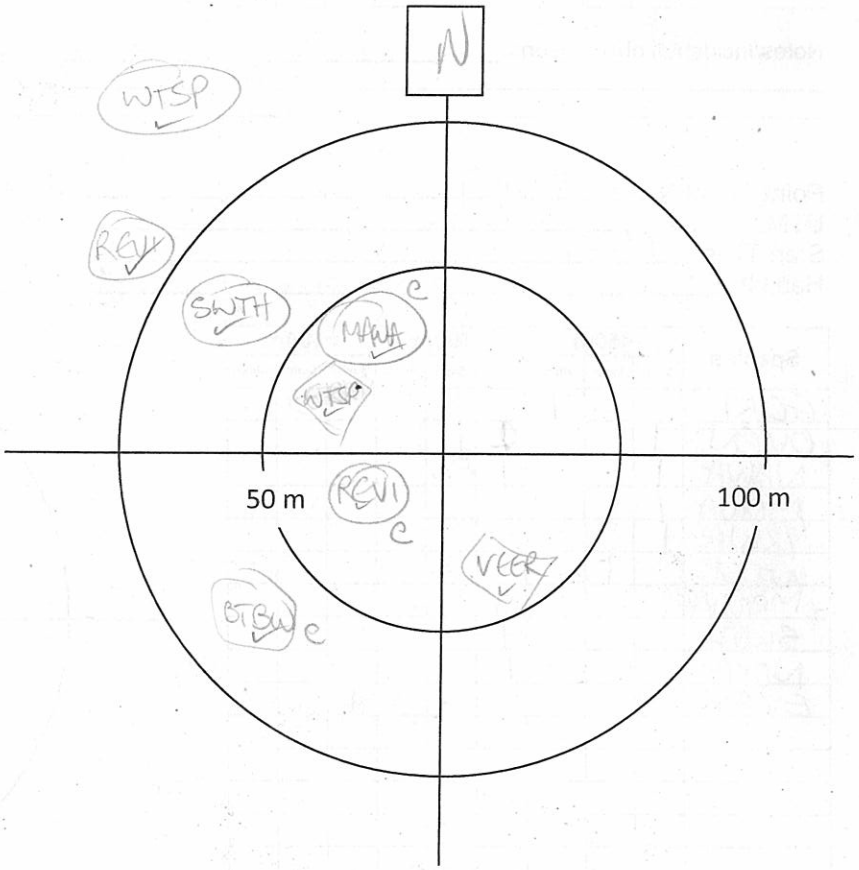

Notes/Incidental observations: very quiet here - same yesterday

Project Number:
Survey Date:

AMEC Earth & Environmental
160 Traders Blvd East, Mississauga, ON L4Z 3K7
Tel: (905) 568-2929
Cell: (416) 459-6228
Fax: (905) 568-1686

Point Count Name: BBS113
UTM:
Start Time 0630
Habitat: Mature jack pine, poplar & birch ← sub-canopy shrub ← Sorbus amer ← under

Species	<50m			<100m			>100m		
	3min	5min	10min	3min	5min	10min	3 min	5min	10min
REVI		1							
DOWO	1								
BTBW			1						
NAWA	1								
WIWR	1								
HETH				1			1		
OVEN				1			1		
RHWO				1					
MAWA						1			

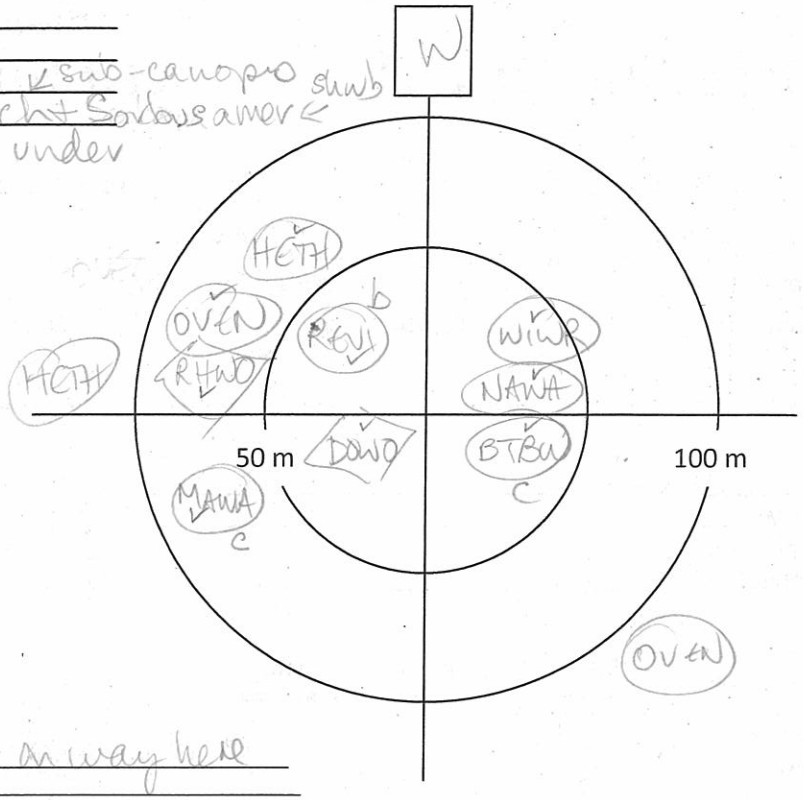

Notes/Incidental observations: burned stump on way here

Point Count Name: BB117
UTM:
Start Time 0654
Habitat: Jack pine & some poplar (mature), birch sub-canopy Sorbus & Acer in shrub layer

Species	<50m			<100m			>100m		
	3min	5min	10min	3min	5min	10min	3 min	5min	10min
GCKI			1						
OVEN	1			2	1				
NAWA	1			1					
MOWA	1								
YRWA	1								
WTSP		1							
MAWA				1					
SWTH				1					
NOPA				1					
EVGR							1		

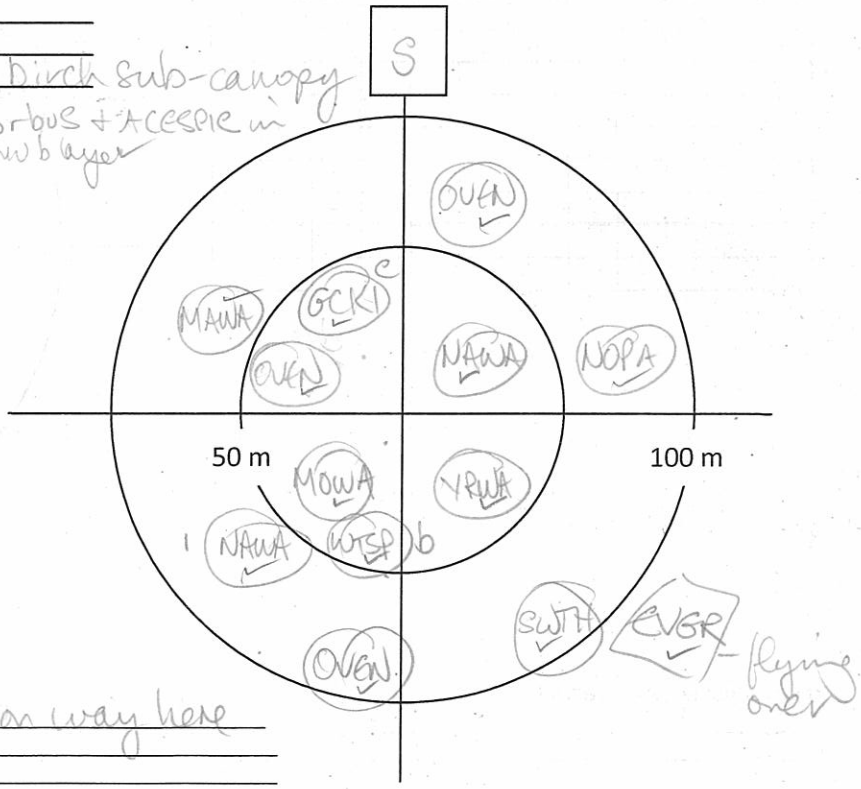

Notes/Incidental observations: burned stump on way here
EVGR flying over (past)

Project Number:
Survey Date:

AMEC Earth & Environmental
160 Traders Blvd East, Mississauga, ON L4Z 3K7
Tel: (905) 568-2929
Cell: (416) 459-6228
Fax: (905) 568-1686

Point Count Name: BB122
UTM:
Start Time 0722
Habitat: Poplar, some jack pine, birch, dense hazel in shrub layer

Species	<50m			<100m			>100m		
	3min	5min	10min	3min	5min	10min	3 min	5min	10min
BTBW	1								
REVI	1			1					
BLWA	1								
BCCH	1								
WTSP			1						
YBSA	1								
BLJA	1								
NAWA				1					
RBGR				1					
CSWA				1					
WTSP									1

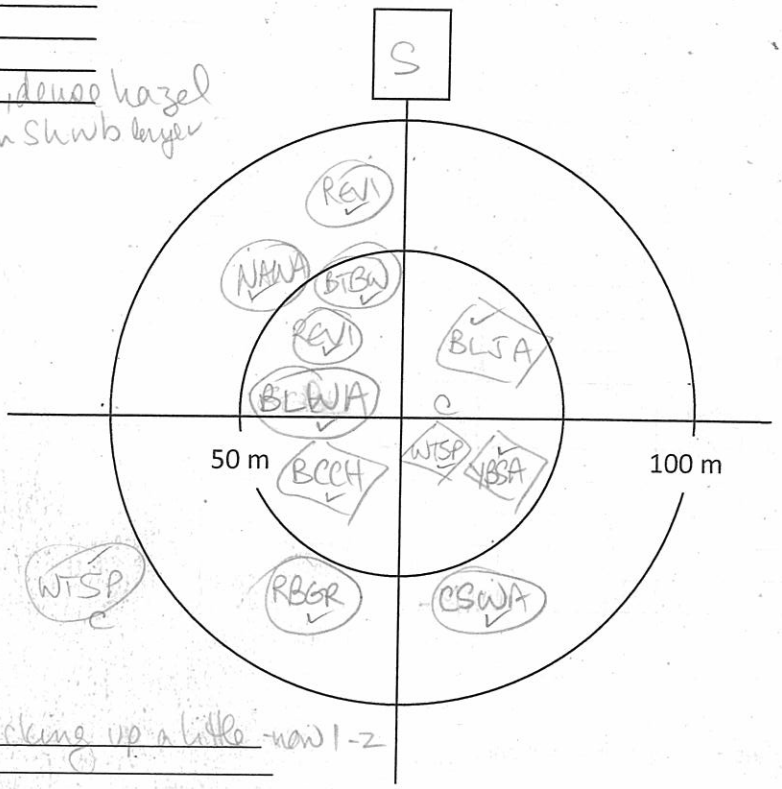

Notes/Incidental observations: Red sqw wind picking up a little now 1-2

Point Count Name: BB123
UTM:
Start Time 0750
Habitat: Decid forest - birch some poplar, dense ACESPI in shrub layer

Species	<50m			<100m			>100m		
	3min	5min	10min	3min	5min	10min	3 min	5min	10min
REVI	3			1					
RBNU	1								
RBGR			1						
LEFL			1						
CSWA						1			
OVEN						1			

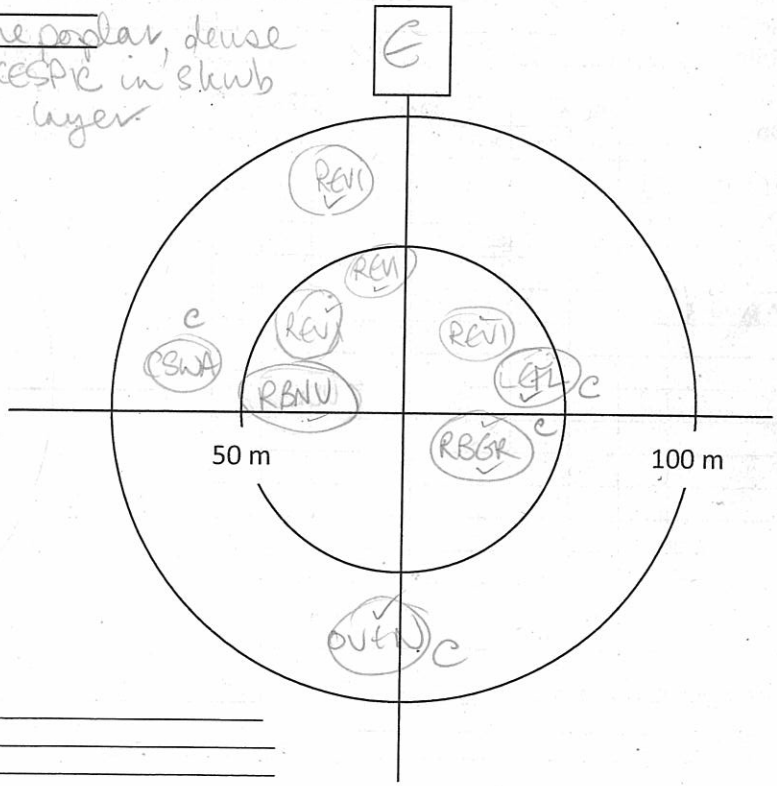

Notes/Incidental observations: anxious & LEFL

Project Number:
Survey Date:

AMEC Earth & Environmental
160 Traders Blvd East, Mississauga, ON L4Z 3K7
Tel: (905) 568-2929
Cell: (416) 459-6228
Fax: (905) 568-1686

Point Count Name: BB119
UTM:
Start Time 0823
Habitat: swamp - birch, poplar, a few spruce,

Species	<50m			<100m			>100m		
	3min	5min	10min	3min	5min	10min	3 min	5min	10min
YBSA	1								
MAWA	1								
BTBW	1								
OVEN				1					
YBSA				1					
RCKI				1					
REVI				1					
WTSP								1	

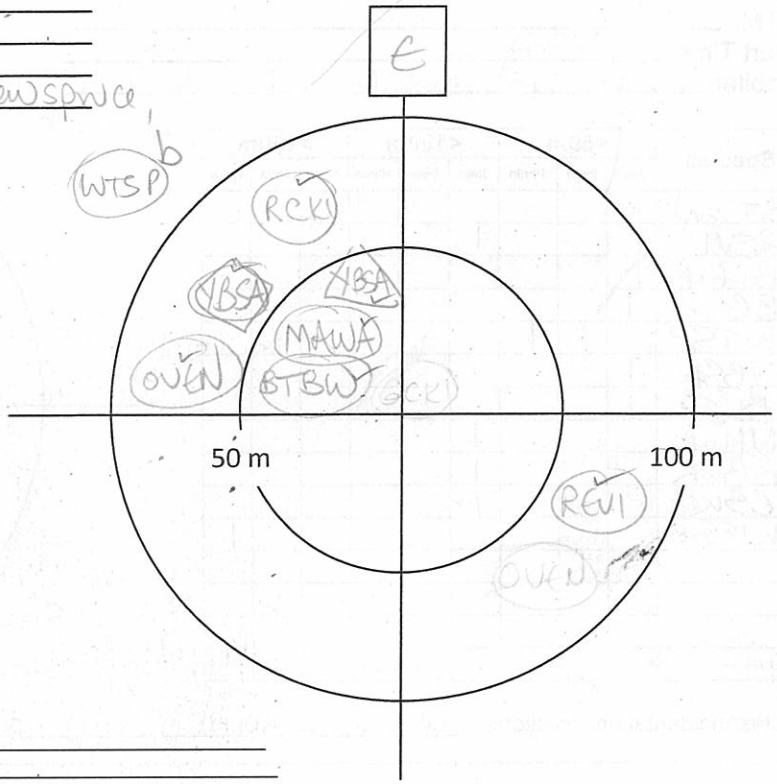

Notes/Incidental observations:

Point Count Name: BB120
UTM:
Start Time 0845
Habitat: alder swamp

Species	<50m			<100m			>100m		
	3min	5min	10min	3min	5min	10min	3 min	5min	10min
NOPA	1								
BCCH	2								
GCKI		2							
OVEN	1								
MAWA				1					

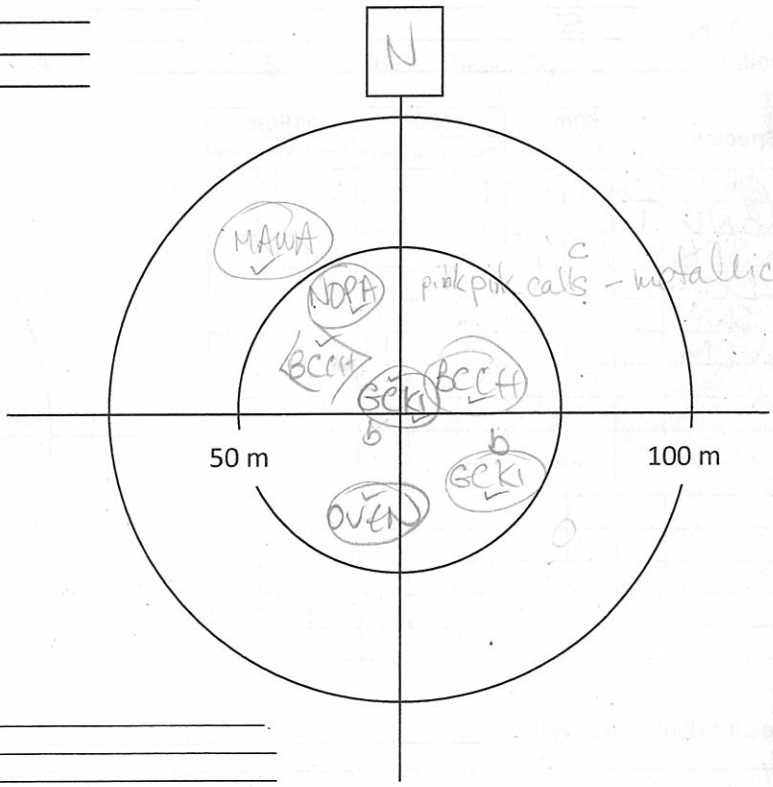

Notes/Incidental observations: mind n I here

Project Number:
Survey Date:

AMEC Earth & Environmental
160 Traders Blvd East, Mississauga, ON L4Z 3K7
Tel: (905) 568-2929
Cell: (416) 459-6228
Fax: (905) 568-1686

Point Count Name: 116 → moved to edge of wetland
UTM: 465470E 5300246N WP#236 (Sarah's GPS)
Start Time 0912
Habitat:

Species	<50m			<100m			>100m		
	3min	5min	10min	3min	5min	10min	3 min	5min	10min
ALFL	1						1		
TEWA	1			1					
COYE	1								
WTSP	3								
NAWA	1						1		
HETH				1			1		
COYE				1					
CSWA					1				
RCKI				1					

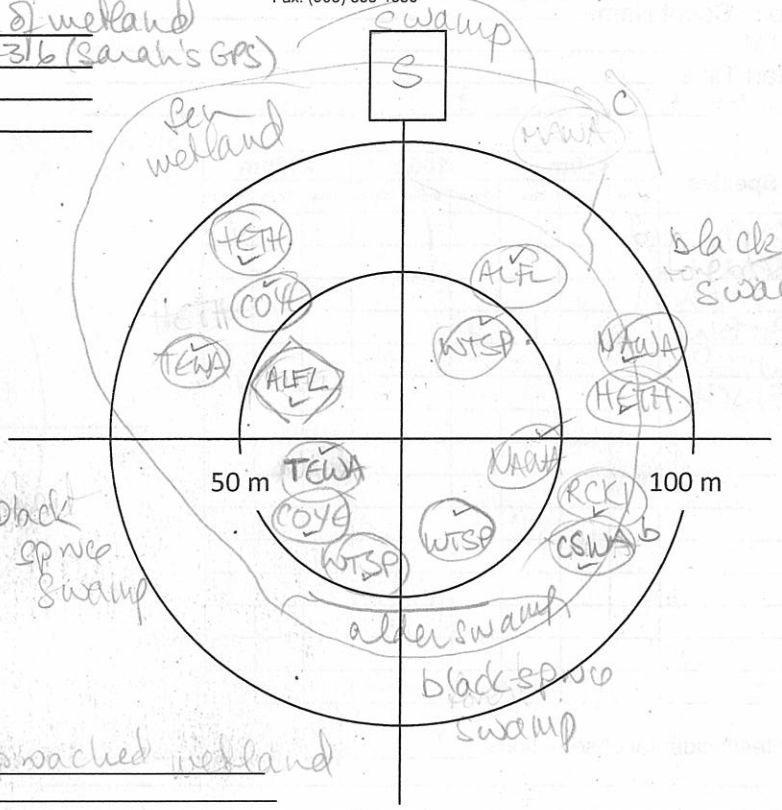

Notes/Incidental observations: SPPE (5) as I approached wetland
also 3 MIFR

Point Count Name: BB 111
UTM: 465562E 5300673N * note UTM
Start Time 0948
Habitat: jackpine/spwd mixed forest

Species	<50m			<100m			>100m		
	3min	5min	10min	3min	5min	10min	3 min	5min	10min
BHVI	1	1							
YBFL	1								
NAWA		1		1					
BLWA				2					
OVEN				2					
BRCR				1					
HETH							1		
EVGR									1

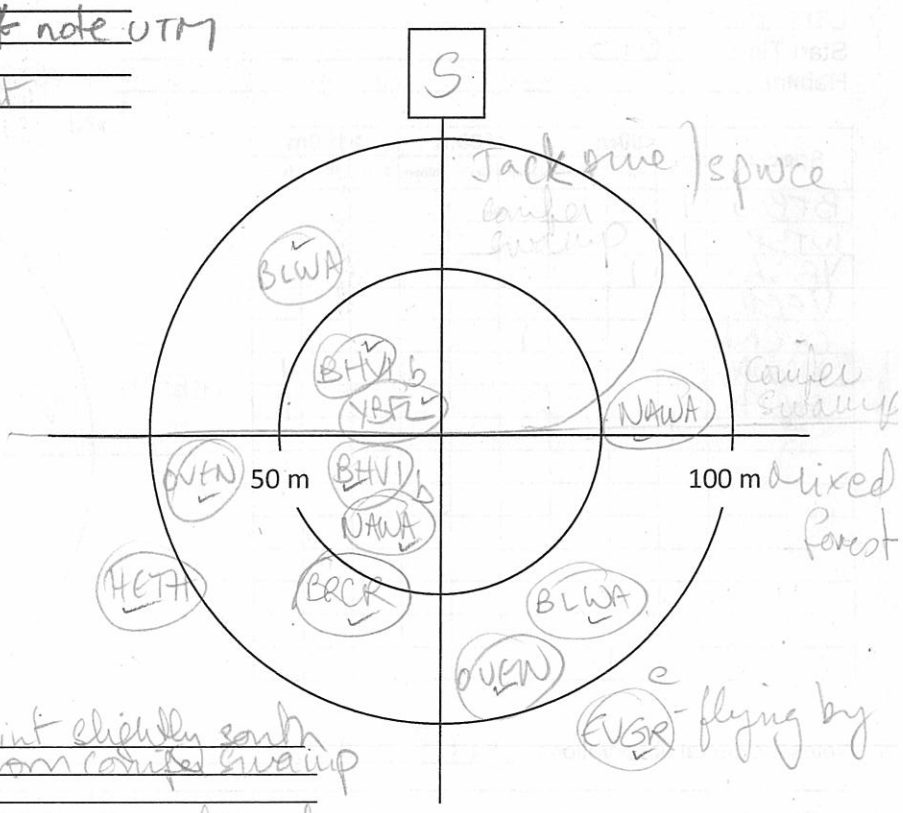

Notes/Incidental observations: moved this point slightly south (23 m) to get observations from conifer swamp
has been wetland (cedar swamp and conifer (mix) swamp - black spruce (some jackpine) swamp) up to this point from edge of wetland

Project Number:
Survey Date:

AMEC Earth & Environmental
160 Traders Blvd East, Mississauga, ON L4Z 3K7
Tel: (905) 568-2929
Cell: (416) 459-6228
Fax: (905) 568-1686

Point Count Name: BB115
UTM:
Start Time 1020
Habitat: Birch forest c a few Jack Pine
Shrub layer ACCSPIC (dense)

Species	<50m			<100m			>100m		
	3min	5min	10min	3min	5min	10min	3 min	5min	10min
OVEN	2				1				1
REVI			1		1				
MAWA	1								
BTBW			1	1					
WTSP									1
SWTH									1

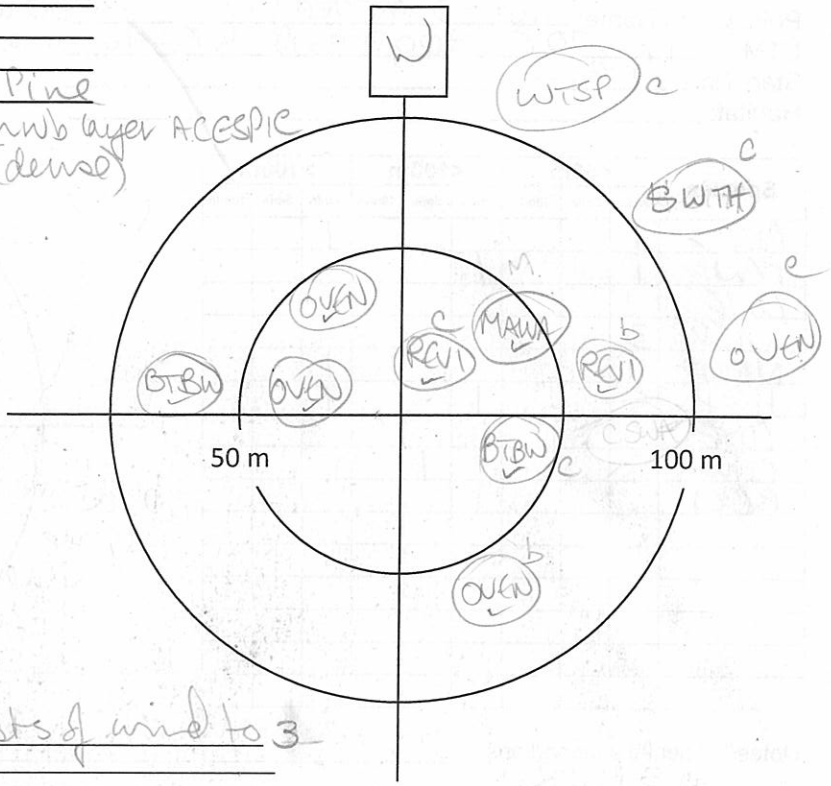

Notes/Incidental observations: occasional gusts of wind to 3 bft

Point Count Name: BB114
UTM:
Start Time 1043
Habitat: Birch forest - heavy understory of ACCSPIC + CORCORN

Species	<50m			<100m			>100m		
	3min	5min	10min	3min	5min	10min	3 min	5min	10min
BTBW	1								
WTSP	1								
YBSA		1							
VEER	1								
OVEN				1					
NAWA									1
HETH									1

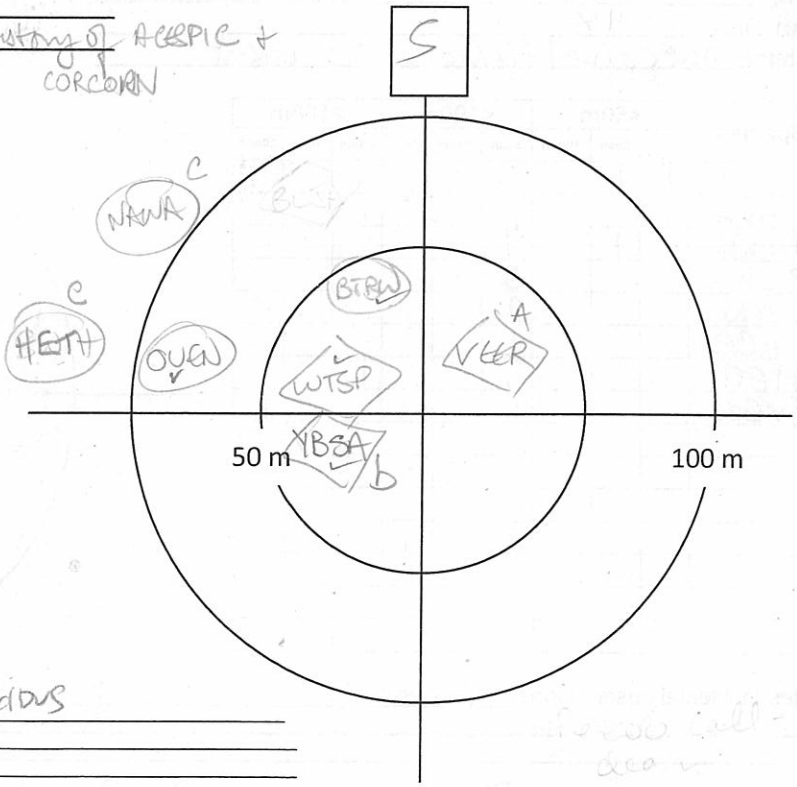

Notes/Incidental observations: VEER was anxious

AMEC Earth & Environmental
160 Traders Blvd East, Mississauga, ON L4Z 3K7
Tel: (905) 568-2929
Cell: (416) 459-6228
Fax: (905) 568-1686

Breeding Bird Point Count Survey

Project Name: JAMGOLD		**Project Number:** TC121522	
Crew Leader:	**Observers:** Jon Heizer		
Date: June 14, 2013	**Start Time (24hr):** 04:45	**End Time (24hr):** 09:30	
Weather: 0% cloud	**Temperature:**	**Wind:** 1–	**Precipitation (Circle):** 0 None, 1 Haze/Fog, 2 Drizzle, 3 Rain

Point Count Name: BB1
UTM:
Start Time 04:58
Habitat:

Species	<50m			<100m			>100m		
	3min	5min	10min	3min	5min	10min	3 min	5min	10min
MOWA				1					
YBSA	1				1				
REVI				1		1			
OVEN	11								
WIWR									
RUGR				1					
WIWR				1					
GCKI	1								
WTSP				1					
BCCH					1				
NAWA			1						

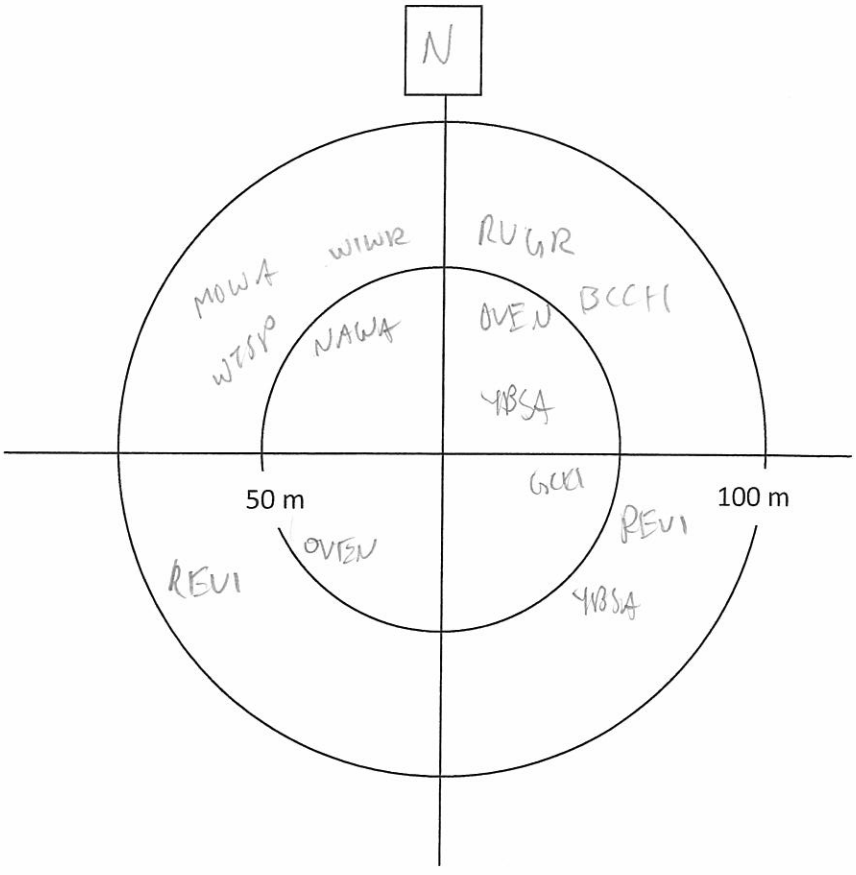

Notes/Incidental observations: RESQ

Project Number:
Survey Date:

AMEC Earth & Environmental
160 Traders Blvd East, Mississauga, ON L4Z 3K7
Tel: (905) 568-2929
Cell: (416) 459-6228
Fax: (905) 568-1686

Point Count Name: BB5
UTM: _____
Start Time 06:35
Habitat: _____

Species	<50m			<100m			>100m		
	3min	5min	10min	3min	5min	10min	3 min	5min	10min
NAWA	III								
MAWA	1			1					
BCCH	1								
METH							1		
WTSP					1				
GCKI			1						

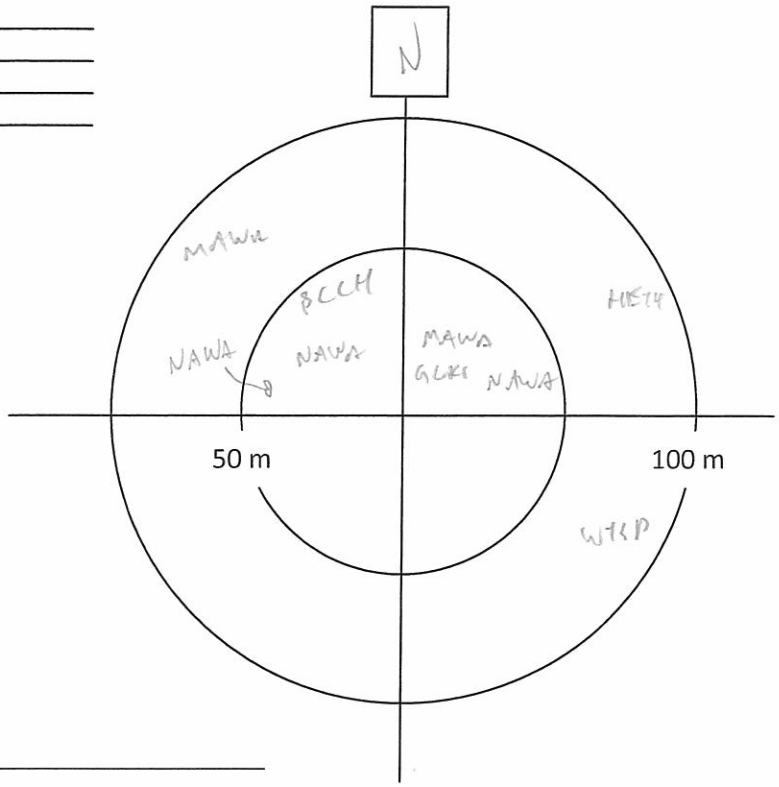

Notes/Incidental observations: _____

Point Count Name: BB6
UTM: _____
Start Time 06:51
Habitat: Pj plantation

Species	<50m			<100m			>100m		
	3min	5min	10min	3min	5min	10min	3 min	5min	10min
OVEN	1			1					
MAWA				1					
NAWA	II	1							
AMRO		1		1					
REVI				II					

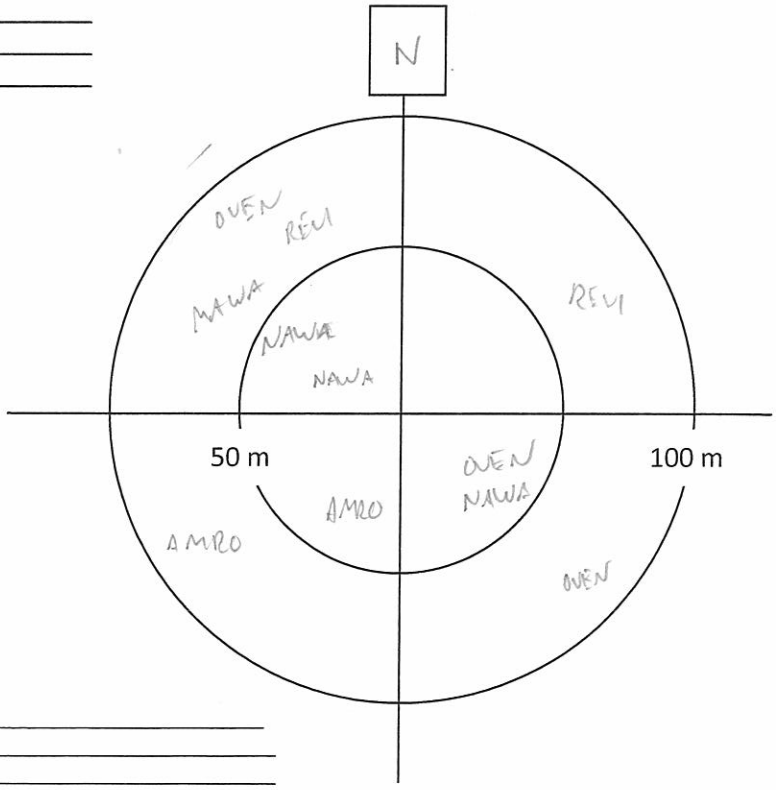

Notes/Incidental observations: _____

Project Number:
Survey Date:

AMEC Earth & Environmental
160 Traders Blvd East, Mississauga, ON L4Z 3K7
Tel: (905) 568-2929
Cell: (416) 459-6228
Fax: (905) 568-1686

Point Count Name: BB2
UTM:
Start Time 05:22
Habitat: young Aspen, Pj

Species	<50m			<100m			>100m		
	3min	5min	10min	3min	5min	10min	3 min	5min	10min
RCKI				1					
WTSP	1								
MAWA	1								
SWTH	1			1					
NAWA	1				1				
BHVI					1				
METH					1	1			
OVEN					1				
YRWA						1			
REVI				1					

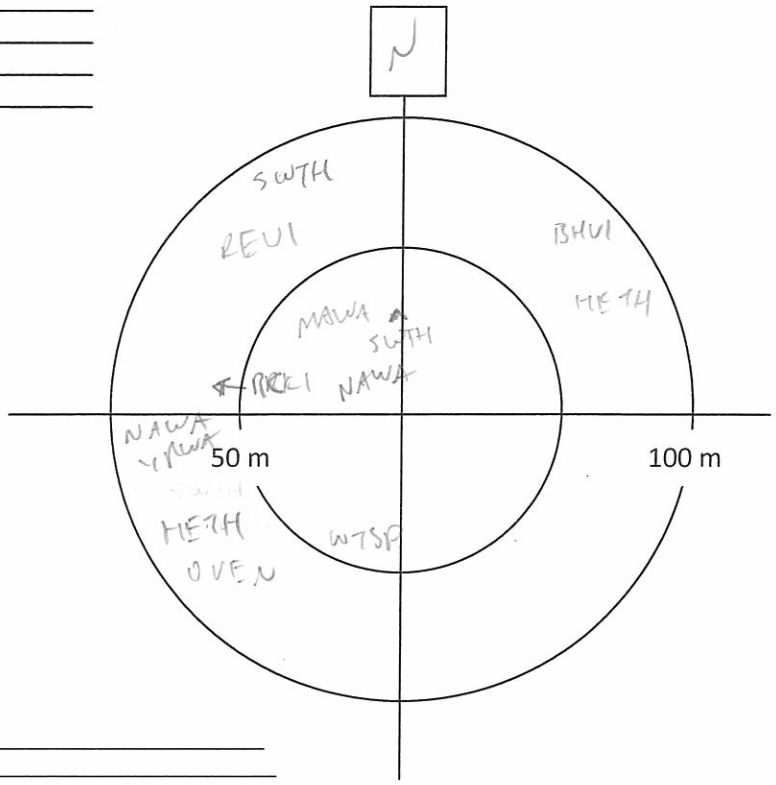

Notes/Incidental observations:

Point Count Name: BB3
UTM:
Start Time 05:40
Habitat: Jack Pine forest/plantation.

Species	<50m			<100m			>100m		
	3min	5min	10min	3min	5min	10min	3 min	5min	10min
NAWA	1			1			11		
BHVI	1						1		
RBNU				1					
WIWR				1					
BRCR				1					
OVEN					1				
YRWA					1				

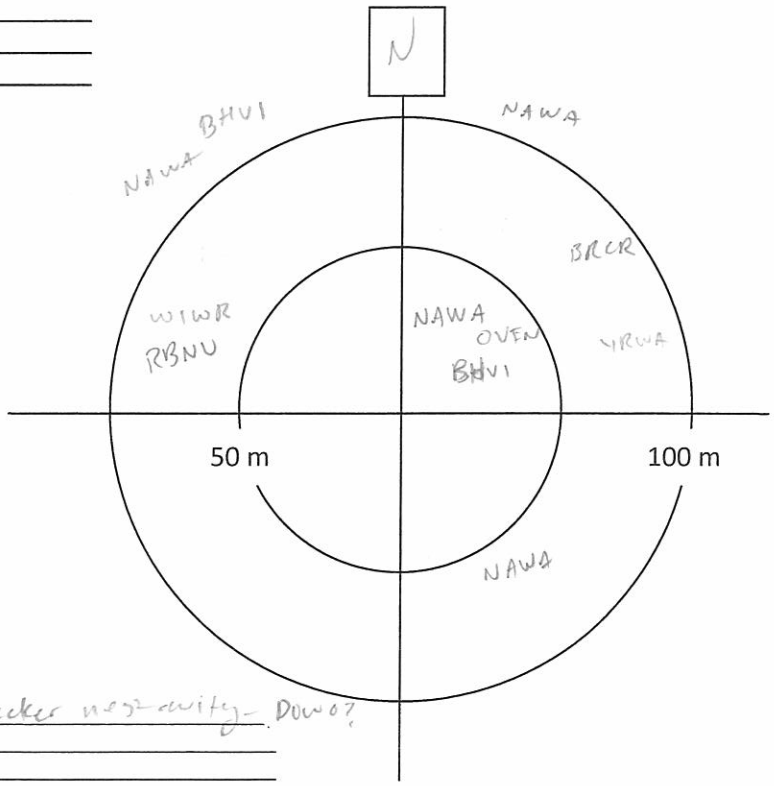

Notes/Incidental observations: enroute - woodpecker nest cavity - Downy?

Project Number:
Survey Date:

AMEC Earth & Environmental
160 Traders Blvd East, Mississauga, ON L4Z 3K7
Tel: (905) 568-2929
Cell: (416) 459-6228
Fax: (905) 568-1686

Point Count Name: BB4
UTM:
Start Time 05:56
Habitat: Jack Pine Plantation

Species	<50m			<100m			>100m		
	3min	5min	10min	3min	5min	10min	3 min	5min	10min
REVI							1		
NAWA				11					
HETH				1			11		
OVEN							1		
WTSP				1				1	
YRWA					1				
UNWO									1
MAWA			1						

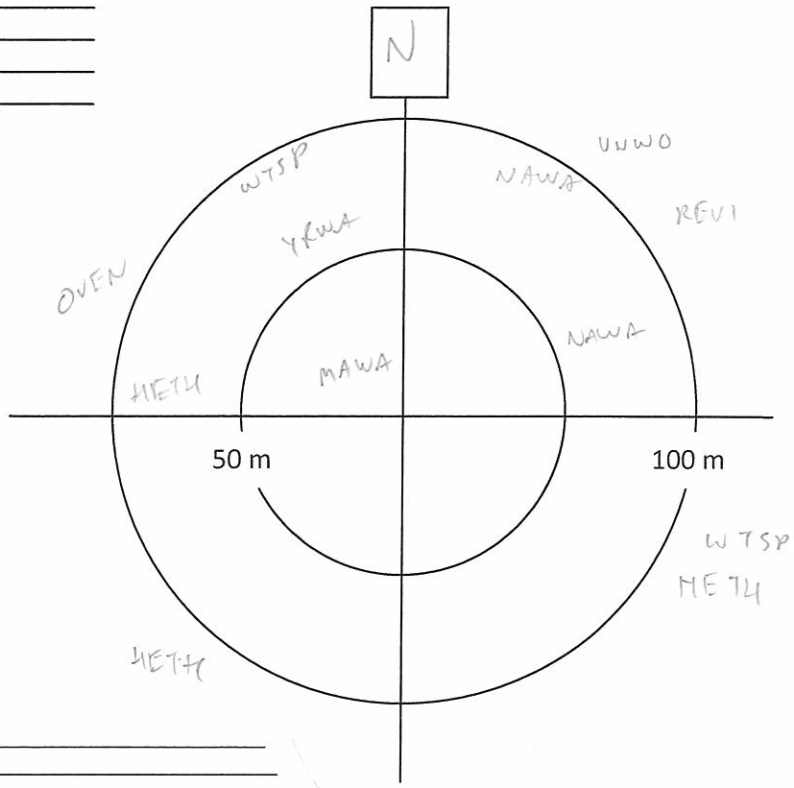

Notes/Incidental observations:

Point Count Name: BB8
UTM:
Start Time 06:20
Habitat: Pj plantation w/ poplar regen.

Species	<50m			<100m			>100m		
	3min	5min	10min	3min	5min	10min	3 min	5min	10min
NAWA	1	1							
OVEN	1			1					
CORA							1		
SWTH				1					
REVI				1					

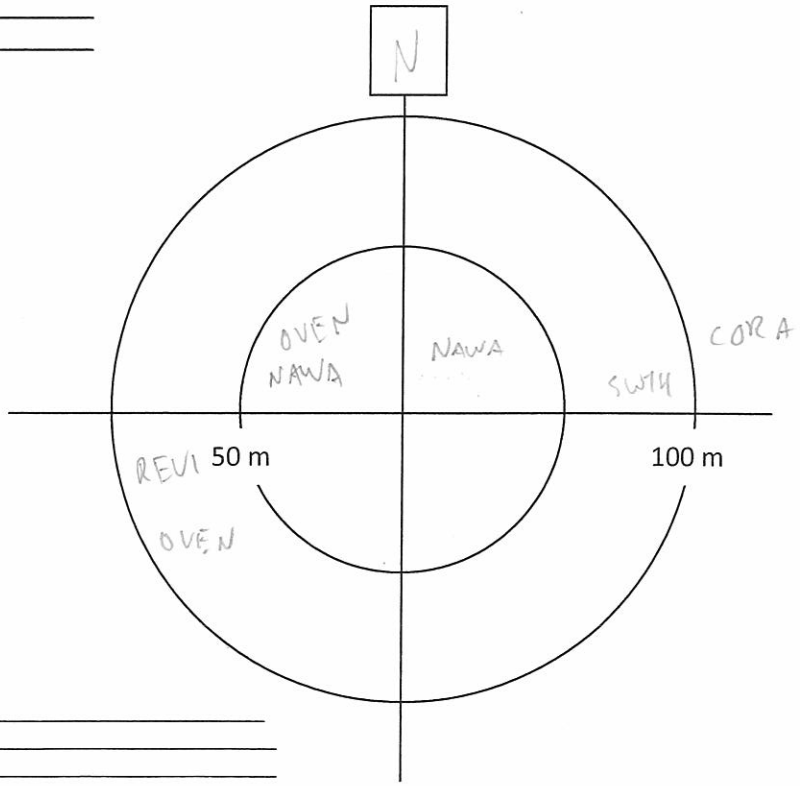

Notes/Incidental observations:

Project Number:
Survey Date:

AMEC Earth & Environmental
160 Traders Blvd East, Mississauga, ON L4Z 3K7
Tel: (905) 568-2929
Cell: (416) 459-6228
Fax: (905) 568-1686

Point Count Name: BB7
UTM:
Start Time 07:05
Habitat:

Species	<50m			<100m			>100m		
	3min	5min	10min	3min	5min	10min	3 min	5min	10min
NAWA	1			1					
LEFL				11					
OVEN				1					
YRWA				1					
AMRO				1					
HETH			1						1
AMRE			1						

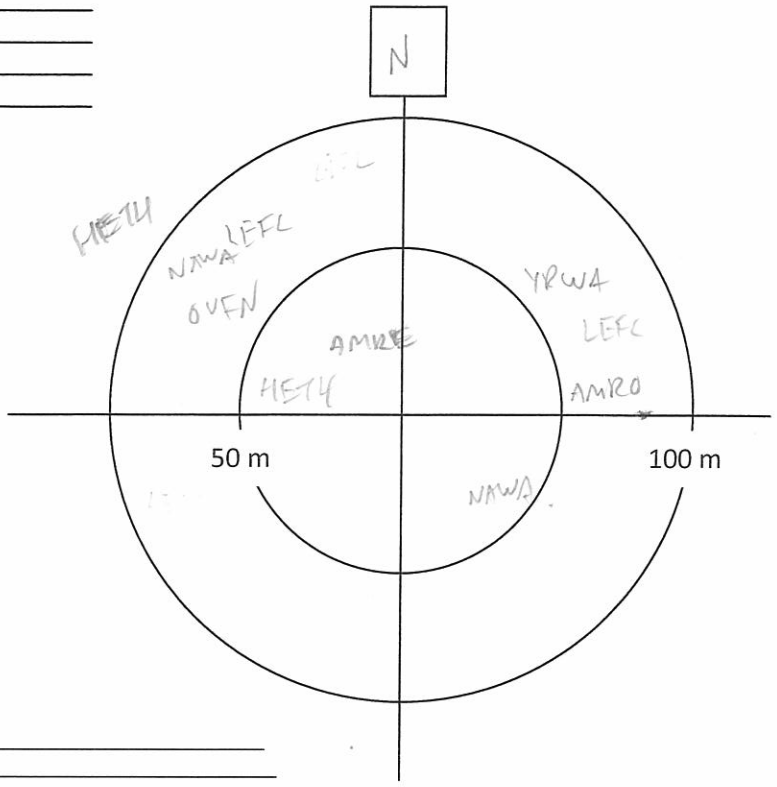

Notes/Incidental observations:

Point Count Name: BB9
UTM:
Start Time 07:31
Habitat:

Species	<50m			<100m			>100m		
	3min	5min	10min	3min	5min	10min	3 min	5min	10min
NAWA				11	1				
HETH				1					
CEDW									
CHSP	1								
WTSP					1				
RCKI									
MAWA						1			

fo

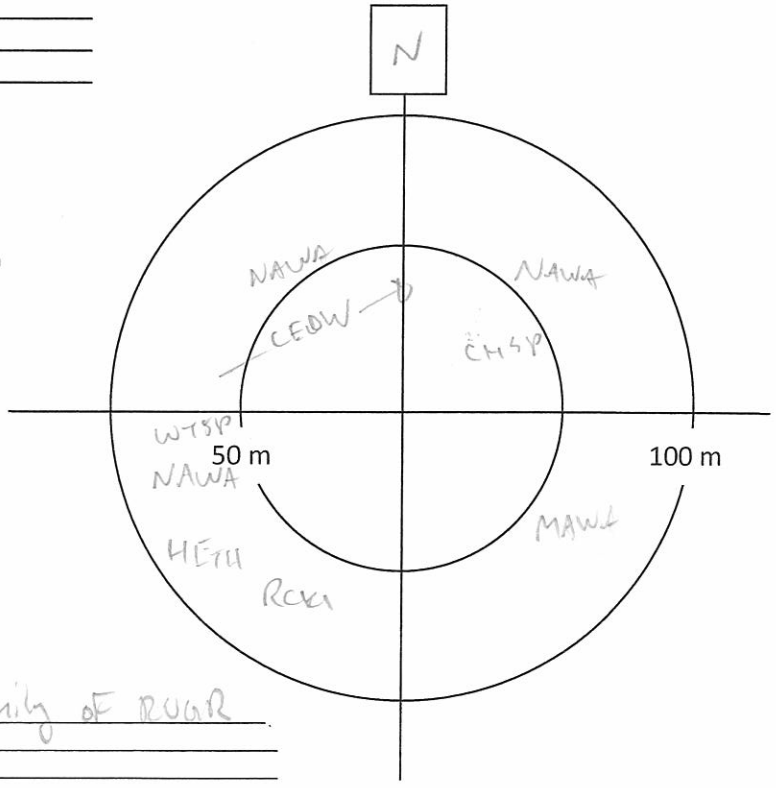

Notes/Incidental observations: en route - Family of RUGR

Project Number:
Survey Date:

AMEC Earth & Environmental
160 Traders Blvd East, Mississauga, ON L4Z 3K7
Tel: (905) 568-2929
Cell: (416) 459-6228
Fax: (905) 568-1686

Point Count Name: BB 13
UTM:
Start Time 08:27
Habitat:

Species	<50m			<100m			>100m		
	3min	5min	10min	3min	5min	10min	3 min	5min	10min
NAWA	1	1		1					
YBFL				1					
RCKI				1					
BRCR							1		
SWSP	1	1			1				
YRWA					1				
WTSP									1
CORA						1			
AMRO						1			

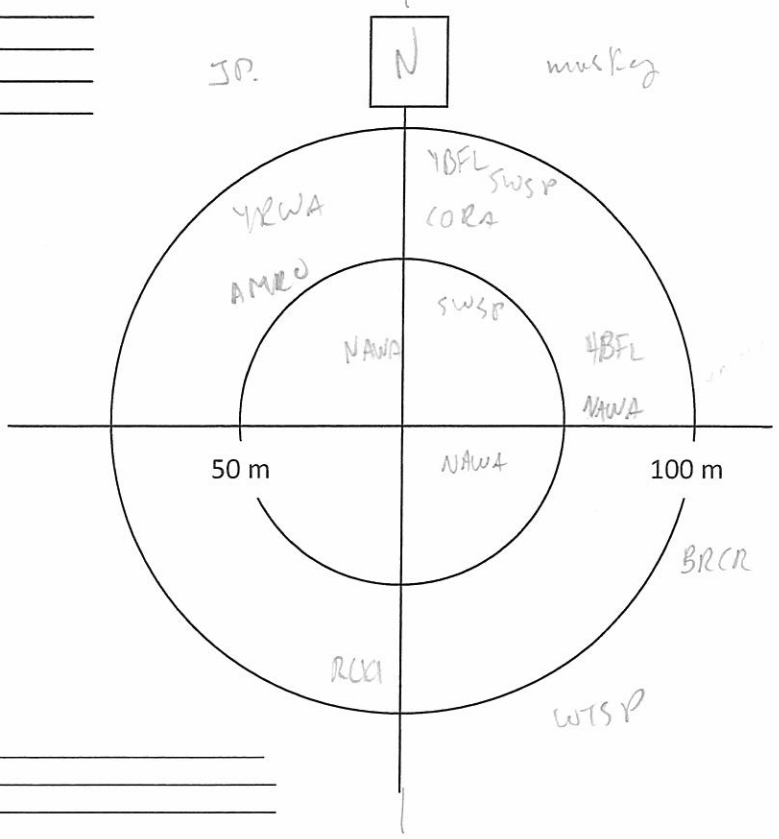

Notes/Incidental observations: SPPE - L1

Point Count Name: BB
UTM:
Start Time 08:46
Habitat:

Species	<50m			<100m			>100m		
	3min	5min	10min	3min	5min	10min	3 min	5min	10min
RCKI				1					
CORA									
COYE	1								
PHVI				1					
OVEN				1					
HOME		•		7					
BUFF	1								
WTSP				1					
SWTH			1		1				
SWSP				1					
PHVI				1					
MAWA			1			1			
NAWA			1	1		1			
YRWA				1					

FO

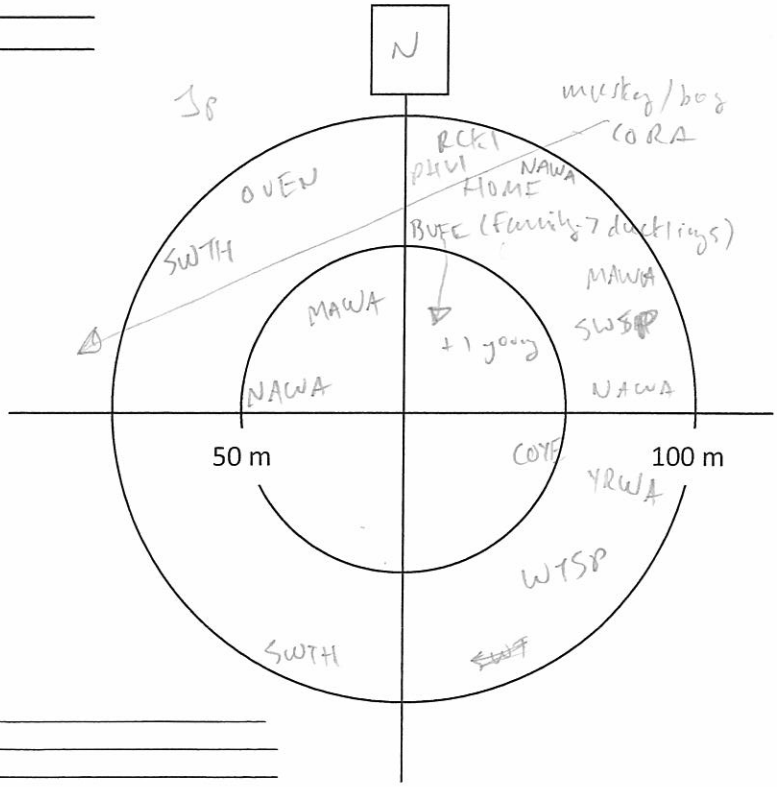

Notes/Incidental observations:

Project Number:
Survey Date:

AMEC Earth & Environmental
160 Traders Blvd East, Mississauga, ON L4Z 3K7
Tel: (905) 568-2929
Cell: (416) 459-6228
Fax: (905) 568-1686

Point Count Name: BB10
UTM:
Start Time 07:52
Habitat:

Species	<50m			<100m			>100m		
	3min	5min	10min	3min	5min	10min	3 min	5min	10min
GCKI	4								
MAWA	1								
CORA				11					
BCCH					1				
RCKI			1						
WTSP			1						
NAWA			11	1					
YRWA			1						
RUGR							-	1	

- feeding young

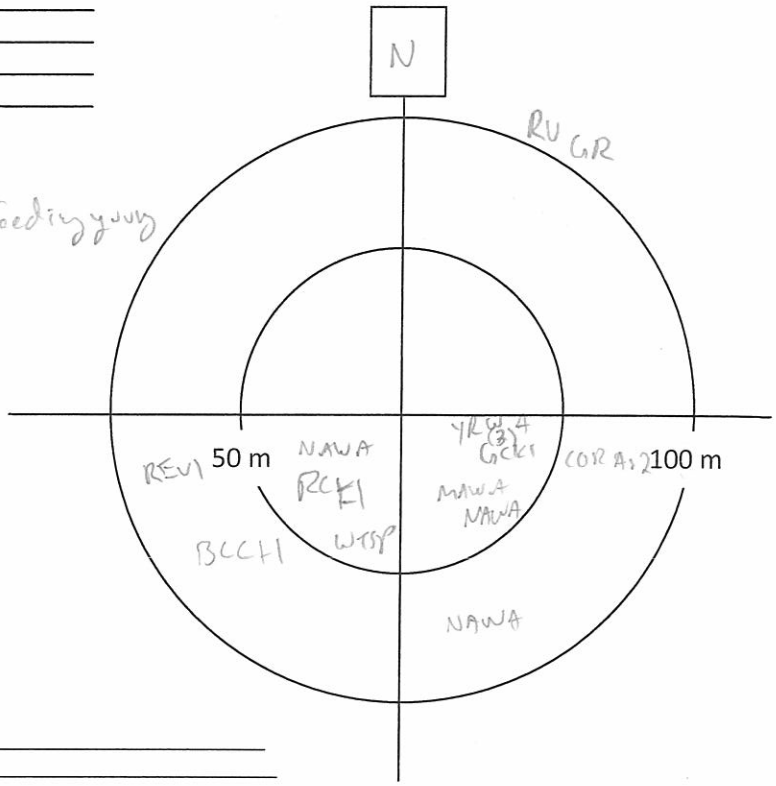

Notes/Incidental observations:

Point Count Name: BB11
UTM:
Start Time 08:11
Habitat:

Species	<50m			<100m			>100m		
	3min	5min	10min	3min	5min	10min	3 min	5min	10min
HETH	1			1					
OVEN				1					
HETH	1		-	1					
NAWA	1			11					
MAWA					1				
RCKI		1							
GCKI			1						
REVI						1			

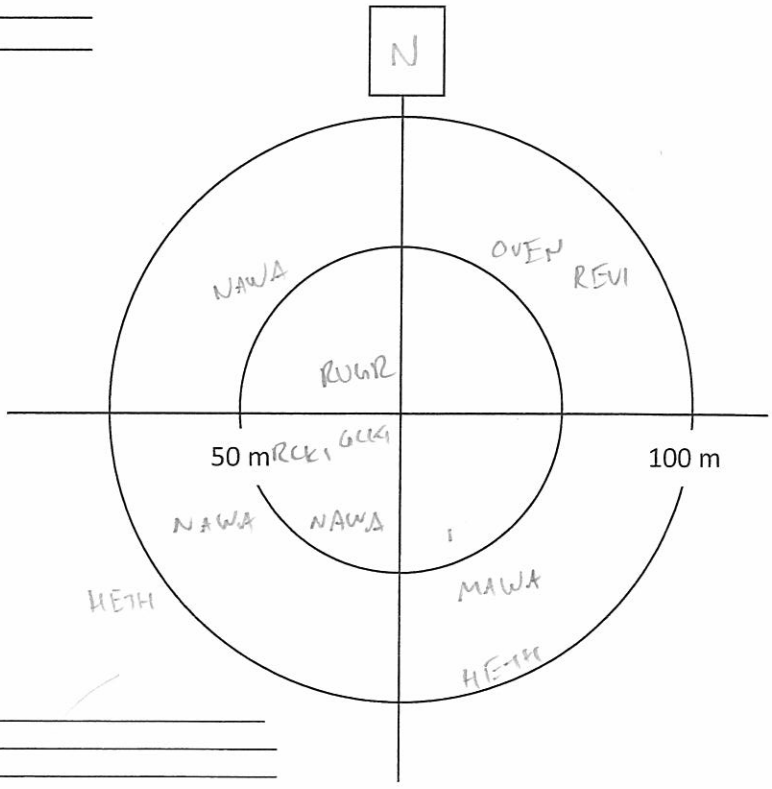

Notes/Incidental observations:

Project Number:
Survey Date:

AMEC Earth & Environmental
160 Traders Blvd East, Mississauga, ON L4Z 3K7
Tel: (905) 568-2929
Cell: (416) 459-6228
Fax: (905) 568-1686

Point Count Name: BB12
UTM: _____
Start Time 09:09
Habitat: _____

Species	<50m			<100m			>100m		
	3min	5min	10min	3min	5min	10min	3 min	5min	10min
NAWA	1		1	1					
OVEN	1			1					
CORA							1		

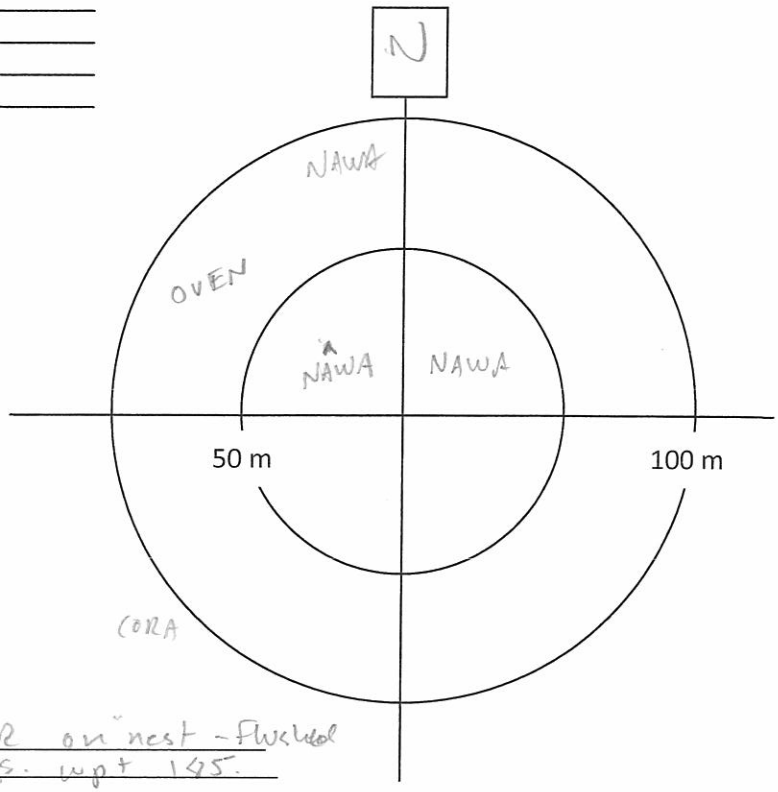

Notes/Incidental observations: en route - RUGR on nest - Flushed - 8 eggs. wpt 185.

Point Count Name: _____
UTM: _____
Start Time _____
Habitat: _____

Species	<50m			<100m			>100m		
	3min	5min	10min	3min	5min	10min	3 min	5min	10min

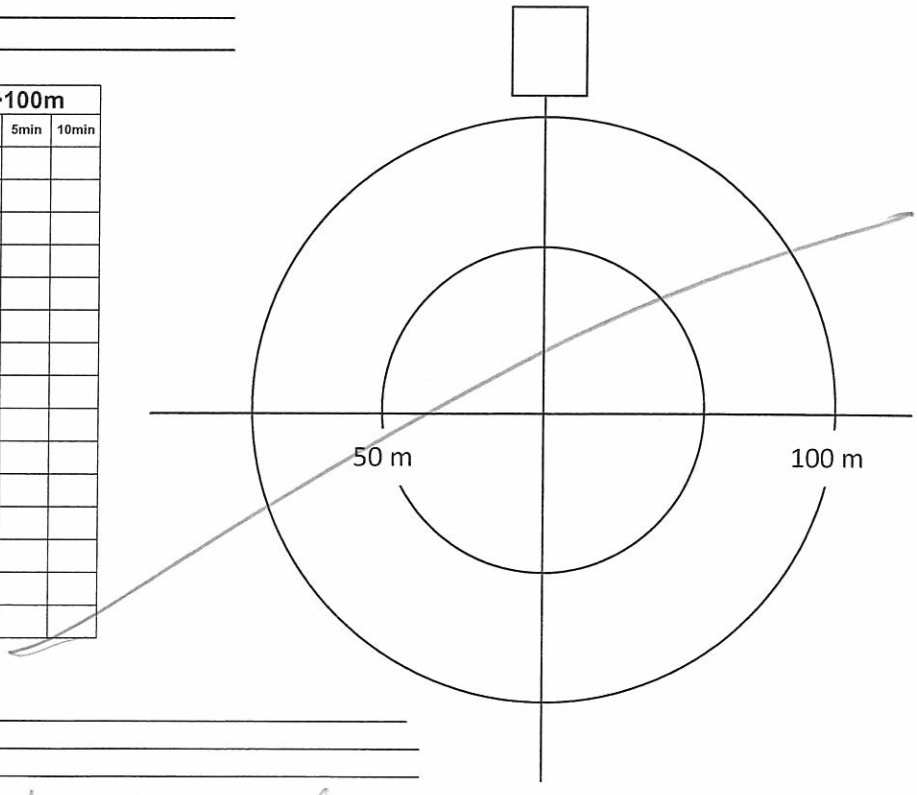

Notes/Incidental observations: _____

en route back to truck - along road.
- NOPA, MOWA.

AMEC Earth & Environmental
160 Traders Blvd East, Mississauga, ON L4Z 3K7
Tel: (905) 568-2929
Cell: (416) 459-6228
Fax: (905) 568-1686

Breeding Bird Point Count Survey

Project Name: IMG		Project Number: TC121522	
Crew Leader: JEFF DALSON	Observers: JEFF DALSON		
Date: JUNE 14/2013	Start Time (24hr): 5:03 am	End Time (24hr): 10:00	
Weather: CLEAR, CALM	Temperature: -5°C - 15°C	Wind: 1	Precipitation (Circle): (0) None 1 Haze/Fog 2 Drizzle 3 Rain

Point Count Name: B31
UTM:
Start Time 5:03 am - 5:13 am
Habitat:

Species	<50m			<100m			>100m		
	3min	5min	10min	3min	5min	10min	3min	5min	10min
YRWA	1			11					
NAWA	1			1					
YBFL	1								
WTSP				11					
BOCH				1					
METH				1			1		
SWTH					1				
AMCR							1		
RCKI					1	1			
WIWR									1

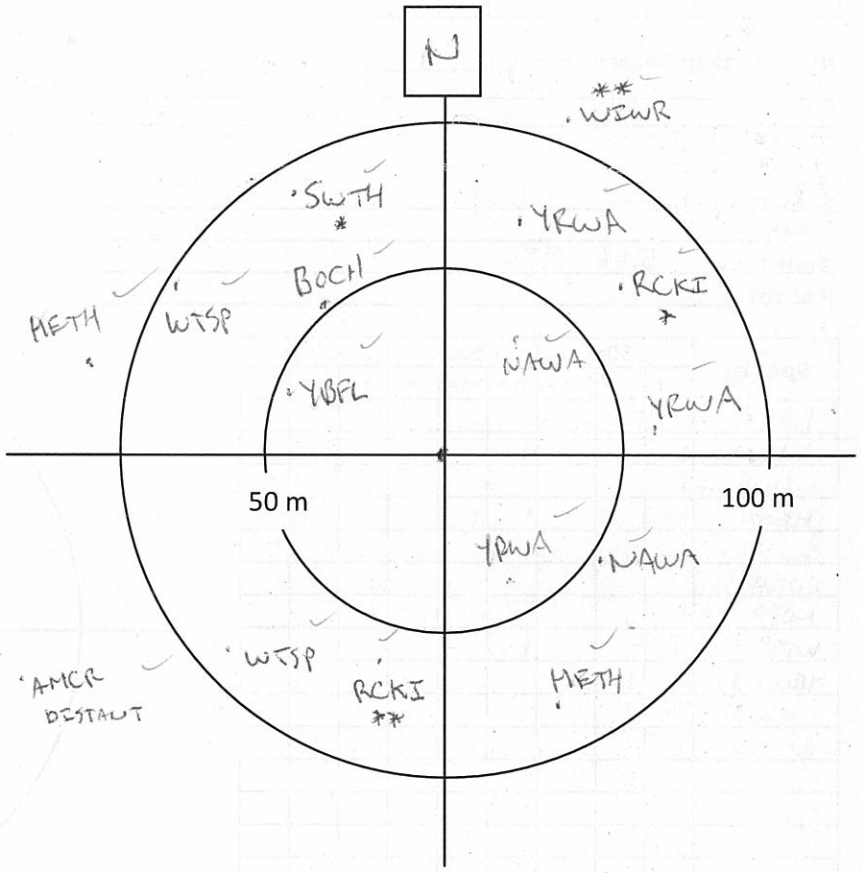

Notes/Incidental observations:

Project Number: TC121522
Survey Date: JUNE 14/2013

AMEC Earth & Environmental
160 Traders Blvd East, Mississauga, ON L4Z 3K7
Tel: (905) 568-2929
Cell: (416) 459-6228
Fax: (905) 568-1686

Point Count Name: B30
UTM:
Start Time 5:23 - 5:33
Habitat:

Species	<50m			<100m			>100m		
	3min	5min	10min	3min	5min	10min	3min	5min	10min
HETH				1		1	1		
RCKI		1		1					
CORA							1		
BEKI									
NAWA				1	1				
MAWA						1			
YRWA				111					
PIWO									1
WIWR					1				
BCCH				1					
OVEN							1		

FLY-OVER

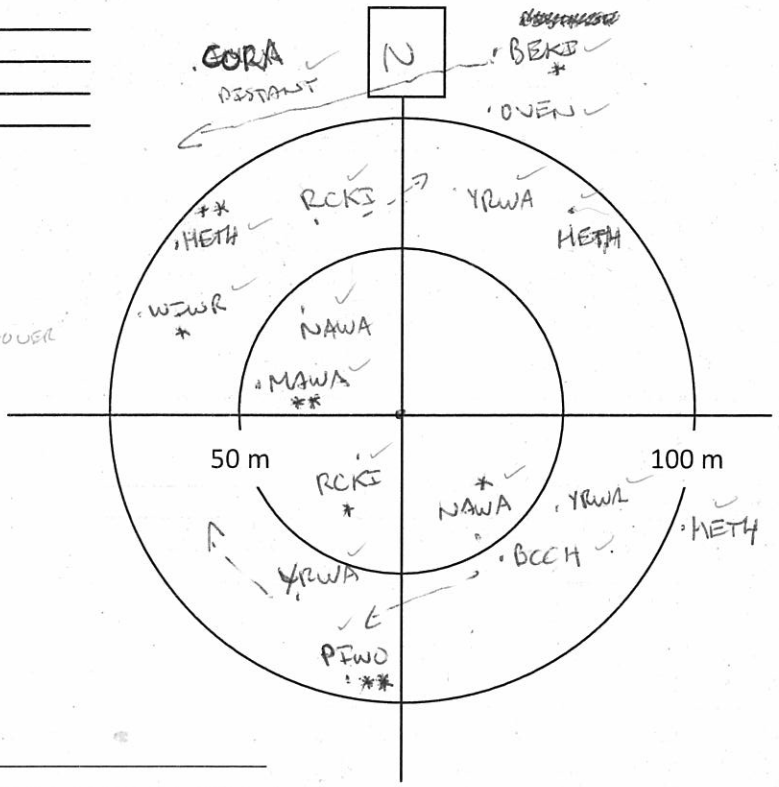

Notes/Incidental observations:

Point Count Name: B34
UTM:
Start Time 5:46 - 5:56
Habitat:

Species	<50m			<100m			>100m		
	3min	5min	10min	3min	5min	10min	3min	5min	10min
REVI				1					
NAWA	1			1					
MAWA	11								
HETH	1			1	1				
SWTH	1			1					
CORA							11		
NOPA	1								
WTSP				1					
YRWA		1							
WIWR	1								
RCKI					1				

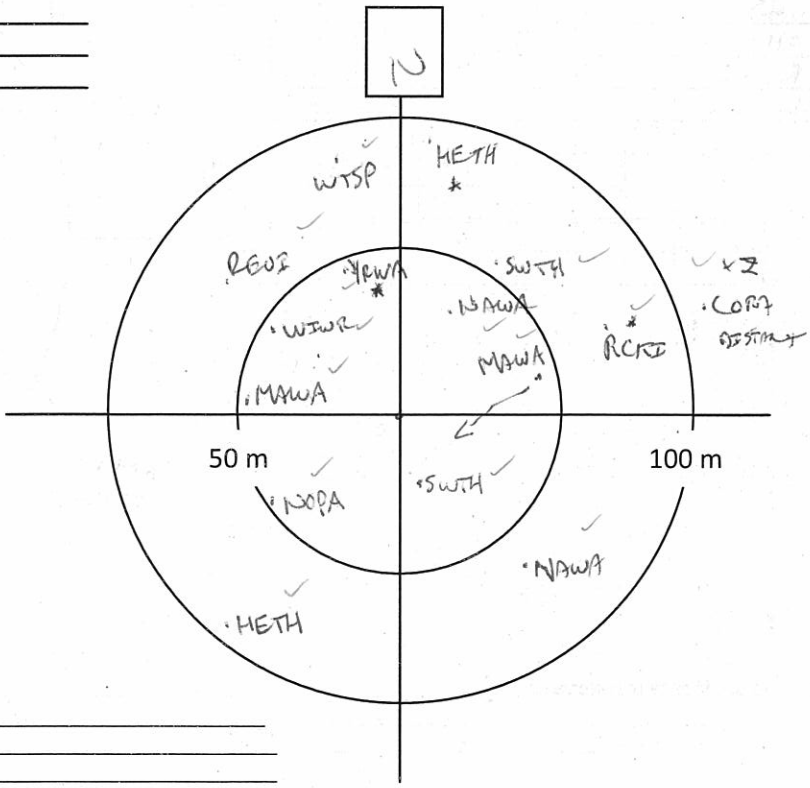

Notes/Incidental observations:

AMEC Earth & Environmental
160 Traders Blvd East, Mississauga, ON L4Z 3K7
Tel: (905) 568-2929
Cell: (416) 459-6228
Fax: (905) 568-1686

Project Number: TC121522
Survey Date: JUNE 14/2013

Point Count Name: B35
UTM: _____
Start Time 6:08 - 6:18
Habitat: _____

Species	<50m			<100m			>100m		
	3m in	5m in	10m in	3m in	5m in	10m in	3m in	5m in	10m in
YRWA				II		I			
MAWA	I								
NAWA	I			I					
BAWW					I				
SWTH		I							
HETH				II					
ALFL				I					
CORA							IIII		
BCCH	I								
RBNU						I			
REVI	I								
WTSP	I			I			I		
RCKI				II					

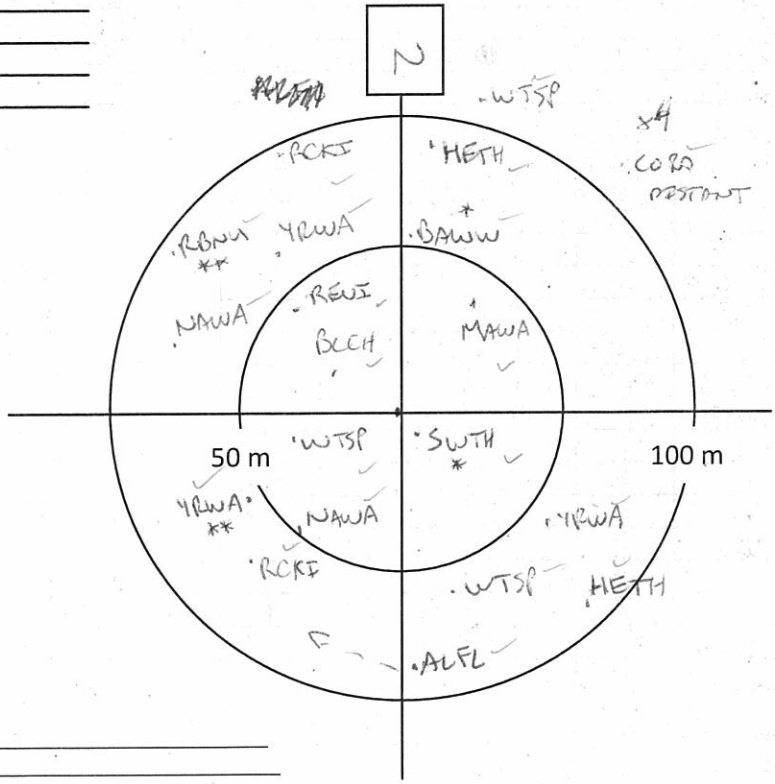

Notes/Incidental observations: RESQ

Point Count Name: B39
UTM: _____
Start Time 6:29 - 6:39
Habitat: _____

Species	<50m			<100m			>100m		
	3m in	5m in	10m in	3m in	5m in	10m in	3m in	5m in	10m in
YBFL	I								
OVEN				I			I		
REVI				I					
NAWA	I								
MAWA	I								
HETH				II					
SWTH				I					
RBNU				I					
CORA							IIII		
YRWA	II								
BOCH			I						
WTSP							I		
DOWO				I					
WIWR					I			I	

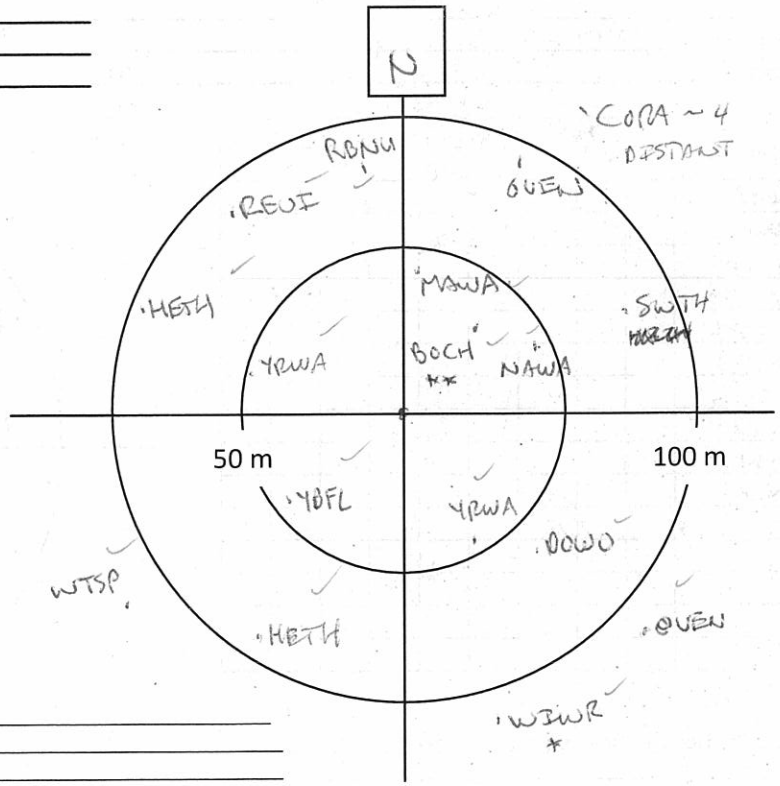

Notes/Incidental observations: _____

Project Number: TC121522
Survey Date: JUNE 14/2013

AMEC Earth & Environmental
160 Traders Blvd East, Mississauga, ON L4Z 3K7
Tel: (905) 568-2929
Cell: (416) 459-6228
Fax: (905) 568-1686

Point Count Name: B38
UTM :
Start Time 6:53 - 7:03
Habitat:

Species	<50m			<100m			>100m		
	3min	5min	10min	3min	5min	10min	3min	5min	10min
RUGR				1					
YRWA	1			1					
WIWR					1				
BAWW	1								
SWTH					1				
REVI				1					
MAWA	1			11					
NAWA				1			1		
OVEN	1								
HETH							1		
WTSP						1			1

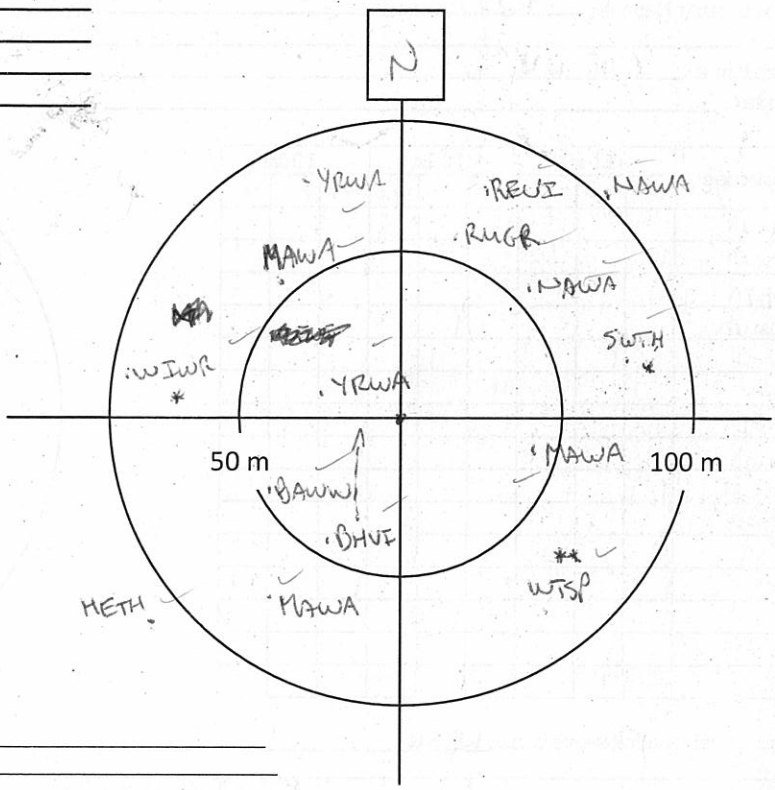

Notes/Incidental observations:

Point Count Name: B43
UTM :
Start Time 7:13 - 7:23
Habitat:

Species	<50m			<100m			>100m		
	3min	5min	10min	3min	5min	10min	3min	5min	10min
BLJA				1			1		
YRWA		1		1					
NAWA					1				
MAWA	1			1					
YBFL	1								
SWTH				1					
WIWR				1					
OVEN				1					
BHVI	1								
RCKI					1				

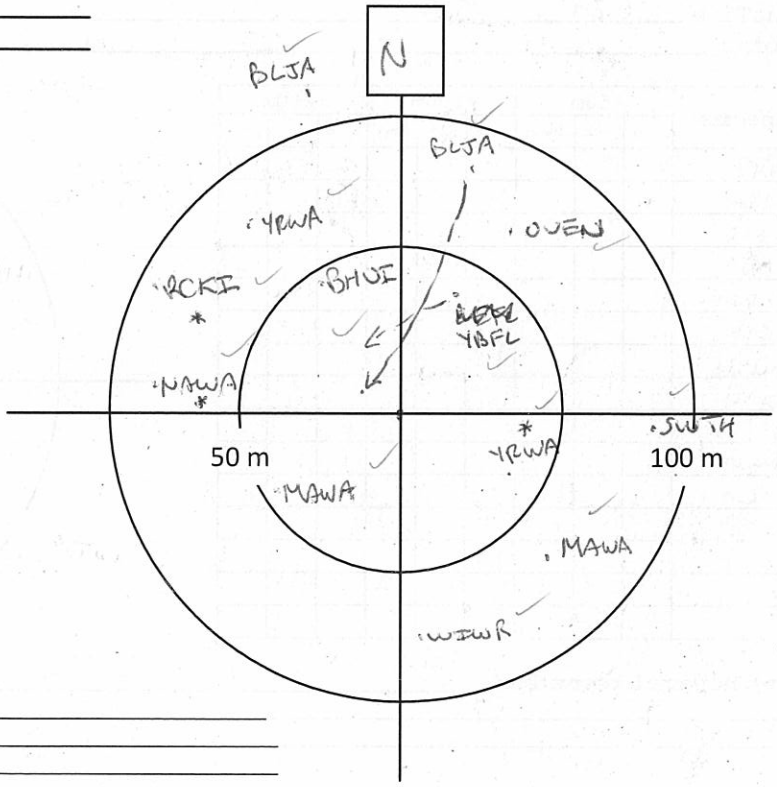

Notes/Incidental observations: RESG

AMEC Earth & Environmental
160 Traders Blvd East, Mississauga, ON L4Z 3K7
Tel: (905) 568-2929
Cell: (416) 459-6228
Fax: (905) 568-1686

Project Number: TC121522
Survey Date: JUNE 14/2013

Point Count Name: B42
UTM: _____
Start Time 7:34 - 7:44
Habitat: _____

Species	<50m			<100m			>100m		
	3m in	5m in	10m in	3m in	5m in	10m in	3m in	5m in	10m in
MAWA	1			1					
OVEN			1		1				
BLBW	1								
BTBW				1					
NOPA				1					
MAWA				1					
REVI					1				
RCKI						1			
CORA						1			
YRWA				1					
BTNW				1					

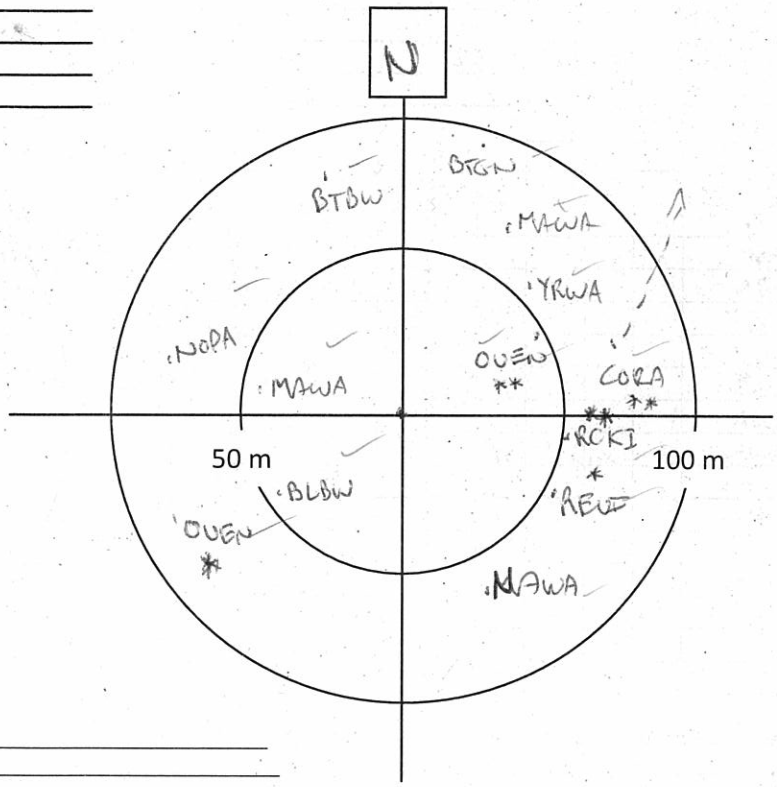

Notes/Incidental observations: RESG

Point Count Name: B41
UTM: _____
Start Time 7:56 - 8:06
Habitat: _____

Species	<50m			<100m			>100m		
	3m in	5m in	10m in	3m in	5m in	10m in	3m in	5m in	10m in
DEJU				1					
RCKI				1					
HETH				11					
BOCH	1								
YBFL	1			1					
NAWA				1					
YRWA	1			1					
BCCH						1			
MAWA		1							
BLJA					1				
CORA									FLYOVER

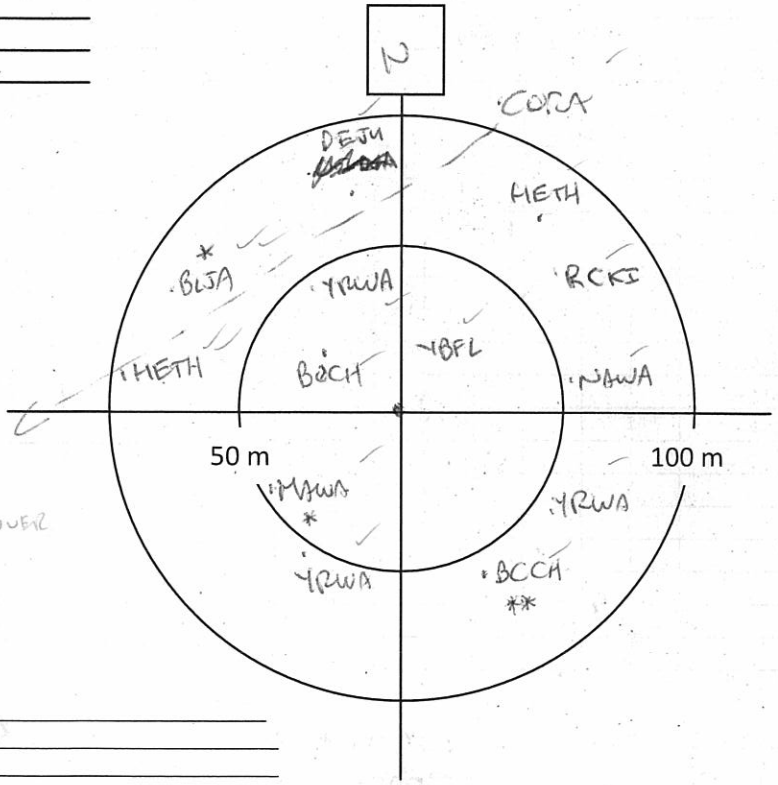

Notes/Incidental observations: _____

Project Number: TC121522
Survey Date: JUNE 14/2013

AMEC Earth & Environmental
160 Traders Blvd East, Mississauga, ON L4Z 3K7
Tel: (905) 568-2929
Cell: (416) 459-6228
Fax: (905) 568-1686

PointCountName: B37
UTM:
StartTime 8:22-8:32
Habitat:

Species	<50m			<100m			>100m		
	3min	5min	10min	3min	5min	10min	3min	5min	10min
BLJA				1					
BTBW				1					
NOPA	1			1		1			
REVI	1			1		1			
MAWA				11					
RCKI				1			1		
NAWA	1								
YRWA			1			1			
BTNW				1					
OVEN				1					
				1					

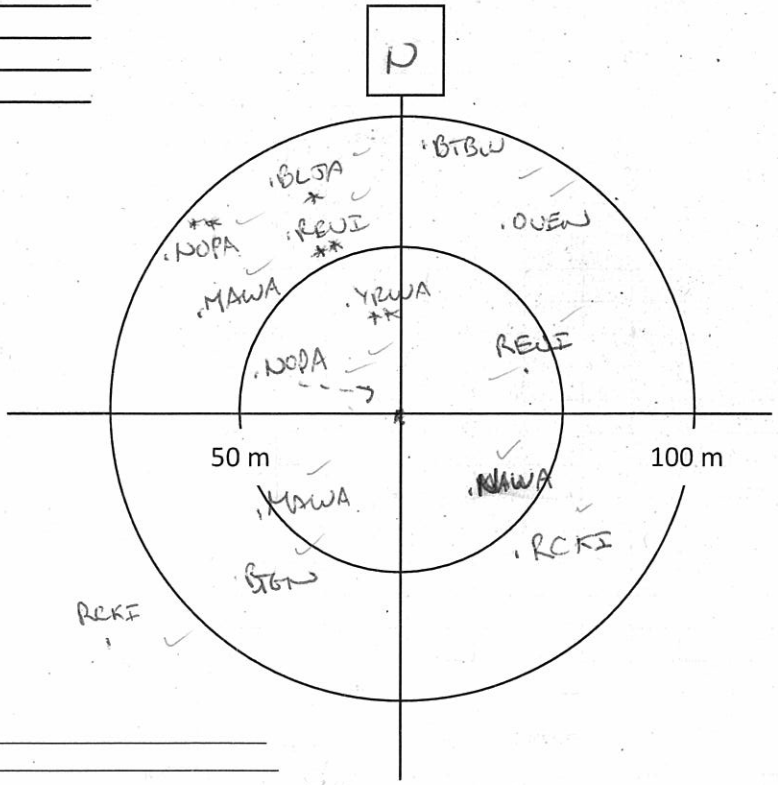

Notes/Incidentalobservations:

PointCountName: B33
UTM:
StartTime 8:43-8:53
Habitat:

Species	<50m			<100m			>100m		
	3min	5min	10min	3min	5min	10min	3min	5min	10min
REVI				11	1				
LEFL				11					
YRWA		1		1					
OVEN				1		1			
MAWA				1					
BLBW	1								
RUGR					1				
NOPA					1				
RCKI						1			

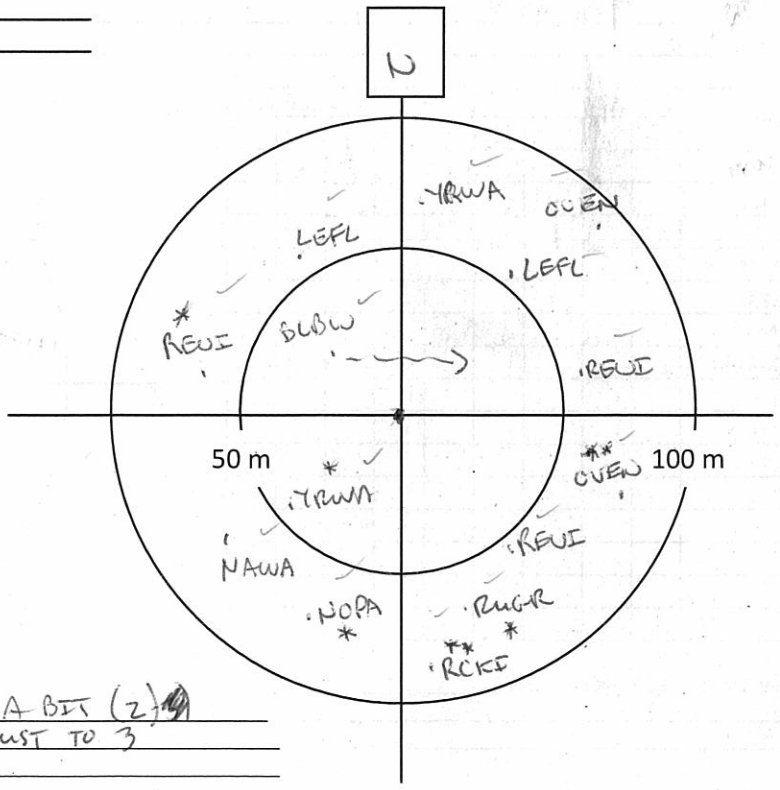

Notes/Incidentalobservations: WIND PICKING UP A BIT (2) GUST TO 3

Project Number: TC121522
Survey Date: JUNE 14/2013

AMEC Earth & Environmental
160 Traders Blvd East, Mississauga, ON L4Z 3K7
Tel: (905) 568-2929
Cell: (416) 459-6228
Fax: (905) 568-1686

PointCountName: B32
UTM:
StartTime 9:00 - 9:10
Habitat:

Species	<50m			<100m			>100m		
	3min	5min	10min	3min	5min	10min	3min	5min	10min
NAWA	1					1			
YRWA	1								
NOPA			1						
REVI				11					
OVEN				1	1				
RCKI						1			
CORA							1		

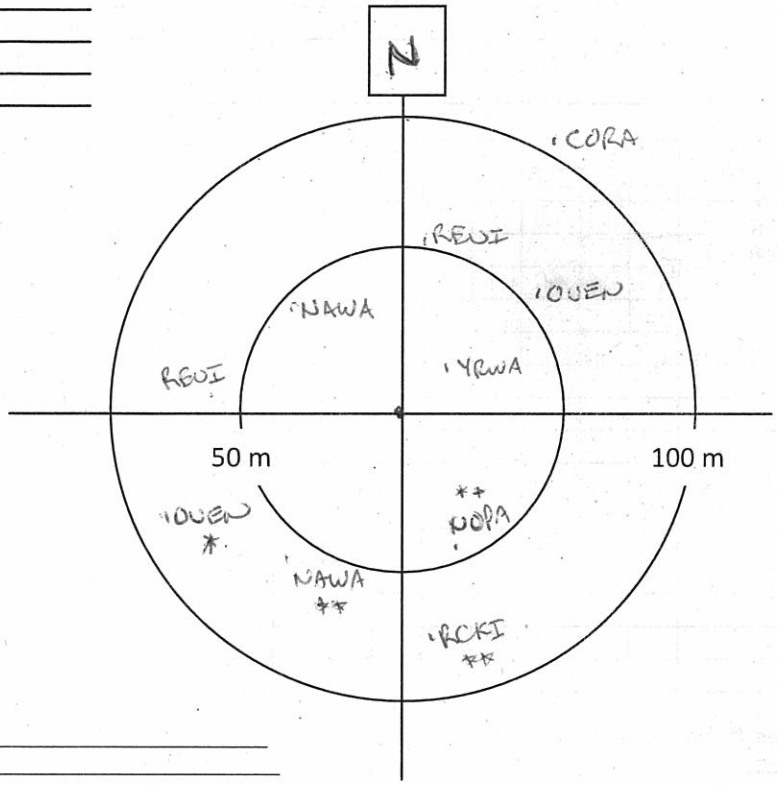

Notes/Incidental observations:

PointCountName: B36
UTM:
StartTime 9:19 - 9:29
Habitat:

Species	<50m			<100m			>100m		
	3min	5min	10min	3min	5min	10min	3min	5min	10min
REVI				11					
CORA				1					
BTBW	1			1					
MAWA	1			1					
NAWA				1					
YBSA	1								
RUGR					1				
BAWW				1					
OVEN				1	1		1		
NOPA		1							

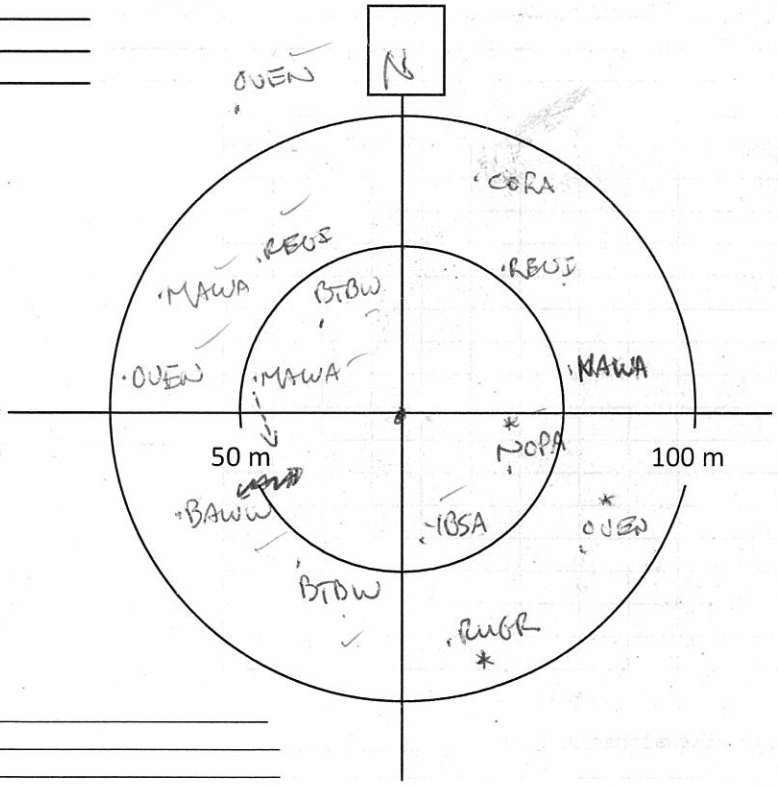

Notes/Incidental observations:

Project Number: TC121522
Survey Date: JUNE 14/2013

AMEC Earth & Environmental
160 Traders Blvd East, Mississauga, ON L4Z 3K7
Tel: (905) 568-2929
Cell: (416) 459-6228
Fax: (905) 568-1686

PointCountName: B40
UTM:
StartTime 9:41 - 9:51
Habitat:

Species	<50m			<100m			>100m		
	3min	5min	10min	3min	5min	10min	3min	5min	10min
NAWA	1				1				
[illegible]	1								
YRWA	1			1					
MAWA	1			1					
HETH									1
CORA									11
BTNW				1					
RENI						1			
WEWR						1			

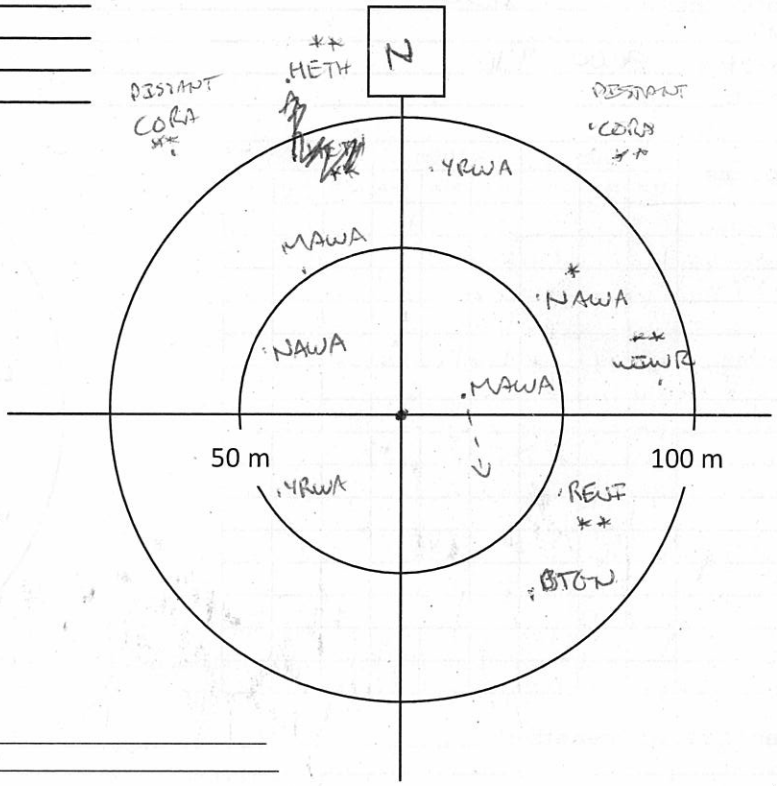

Notes/Incidentalobservations: QUIET

PointCountName:
UTM:
StartTime
Habitat:

Species	<50m			<100m			>100m		
	3min	5min	10min	3min	5min	10min	3min	5min	10min

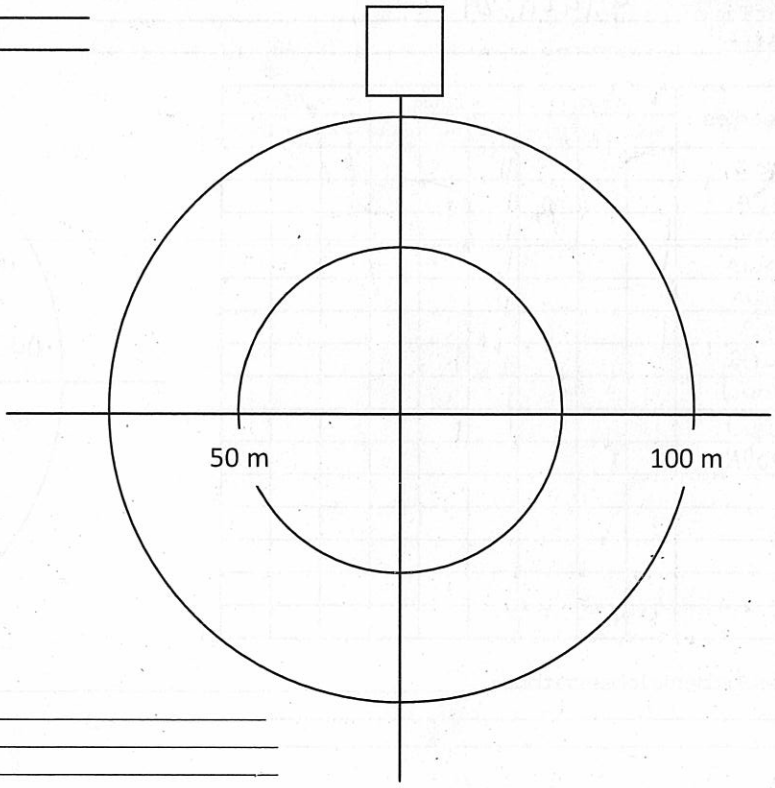

Notes/Incidentalobservations:

AMEC Earth & Environmental
160 Traders Blvd East, Mississauga, ON L4Z 3K7
Tel: (905) 568-2929
Cell: (416) 459-6228
Fax: (905) 568-1686

Breeding Bird Point Count Survey

Project Name: IAM Gold		**Project Number:** TC121522	
Crew Leader: Jeff Babsdon	**Observers:** SKM		
Date: 14 June 13	**Start Time (24hr):** 0515	**End Time (24hr):** 10:45	
Weather: Clear	**Temperature:** 10°C	**Wind:** 1-2	**Precipitation (Circle):** (0) None 1 Haze/Fog 2 Drizzle 3 Rain

Point Count Name: BB 19
UTM: _____
Start Time 0530
Habitat: black spruce swamp

Species	<50m			<100m			>100m		
	3min	5min	10min	3min	5min	10min	3 min	5min	10min
YRWA	1								
RCKI	1								
NAWA	1								
AMCR	1								
SWTH	1								
WIWR				1					
YBFL					1				
NAWA						1			

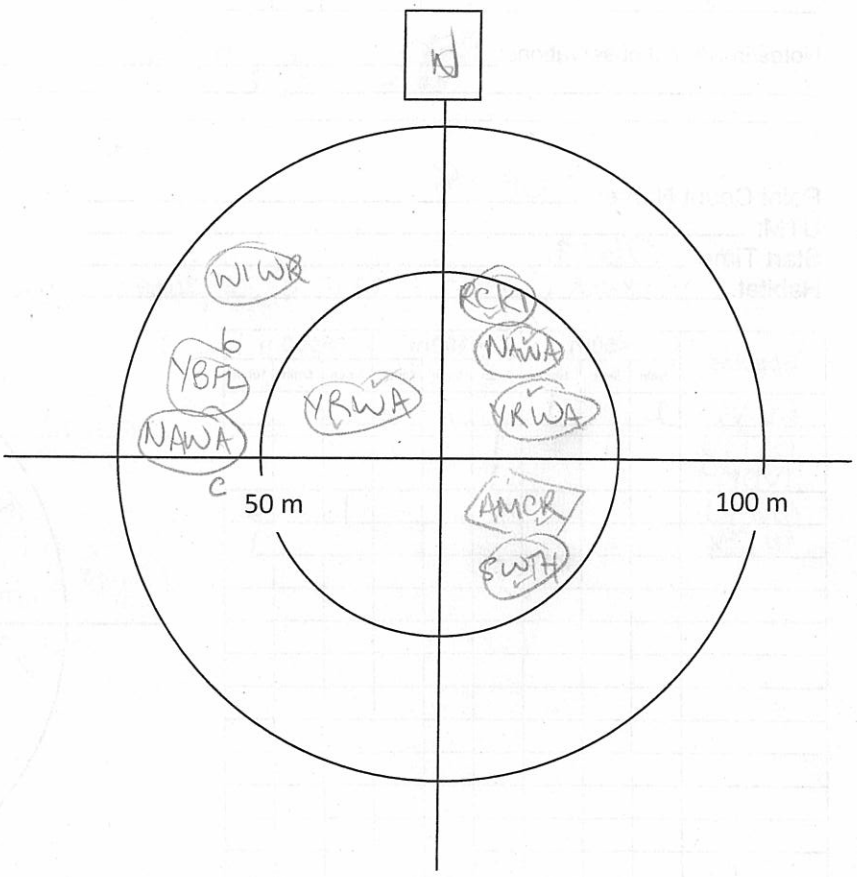

Notes/Incidental observations: _____

Project Number: TC121522
Survey Date: 14 June 13

AMEC Earth & Environmental
160 Traders Blvd East, Mississauga, ON L4Z 3K7
Tel: (905) 568-2929
Cell: (416) 459-6228
Fax: (905) 568-1686

Point Count Name: BB17
UTM:
Start Time 0555
Habitat: clearing in poplar/spruce forest

Species	<50m			<100m			>100m		
	3min	5min	10min	3min	5min	10min	3 min	5min	10min
REVI	1								
MAWA	1		1						
BLBW	1								
COYE		1							
WIWR	1								
OVEN	1			1					1
NAWA	1								
NOPA				1					
SWTH				1					
WTSP								1	

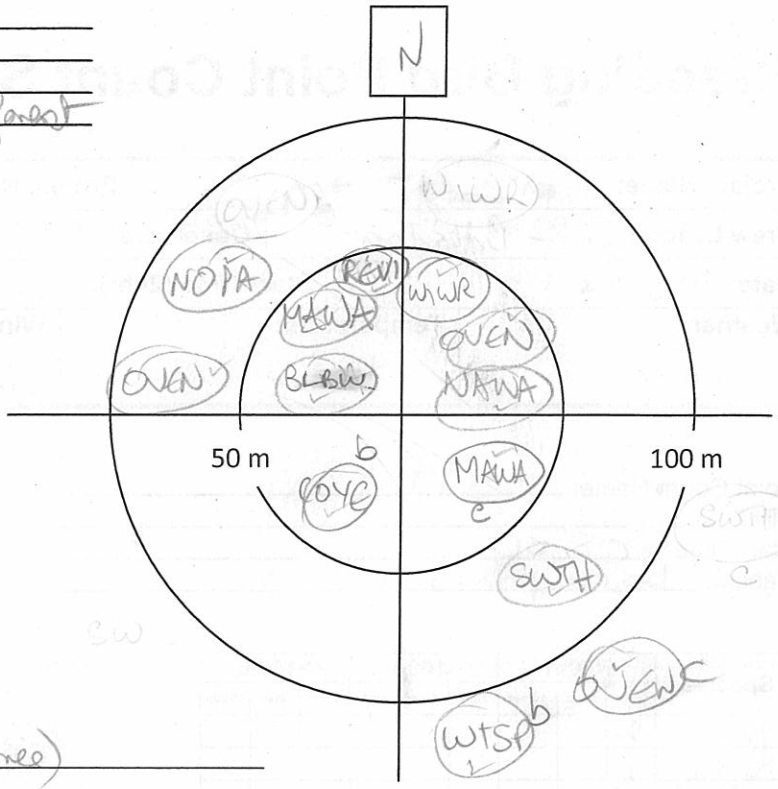

Notes/Incidental observations: SPPE (calling from tree)

Point Count Name: BB18
UTM:
Start Time 0617
Habitat: Mixed forest – fir + poplar + spruce + birch

Species	<50m			<100m			>100m		
	3min	5min	10min	3min	5min	10min	3 min	5min	10min
REVI	2		1						
BTBW		1		1					
NOPA				1					
OVEN							1		2
WTSP									1

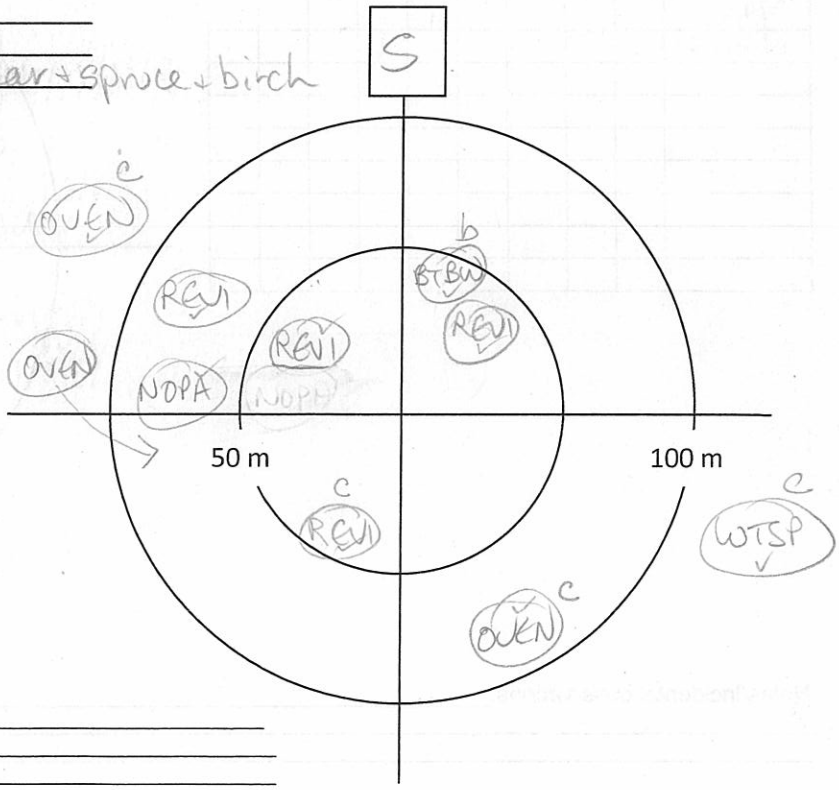

Notes/Incidental observations:

Project Number: ~~[illegible]~~ TC121522
Survey Date: 14 June 13

AMEC Earth & Environmental
160 Traders Blvd East, Mississauga, ON L4Z 3K7
Tel: (905) 568-2929
Cell: (416) 459-6228
Fax: (905) 568-1686

Point Count Name: BB21
UTM:
Start Time 0642
Habitat: Black spruce swamp (some tamarack) open understory

Species	<50m			<100m			>100m		
	3min	5min	10min	3min	5min	10min	3 min	5min	10min
REVI	1			1					
RBNU	1								
GCKI			1						
BOCH	1								
BCCH	1								
YBFL	1								
NAWA	1			1					
SWTH				1					
OVEN				1					
MAWA				1					
RCKI				1			1		
PIGR					1				
BLJA				1					

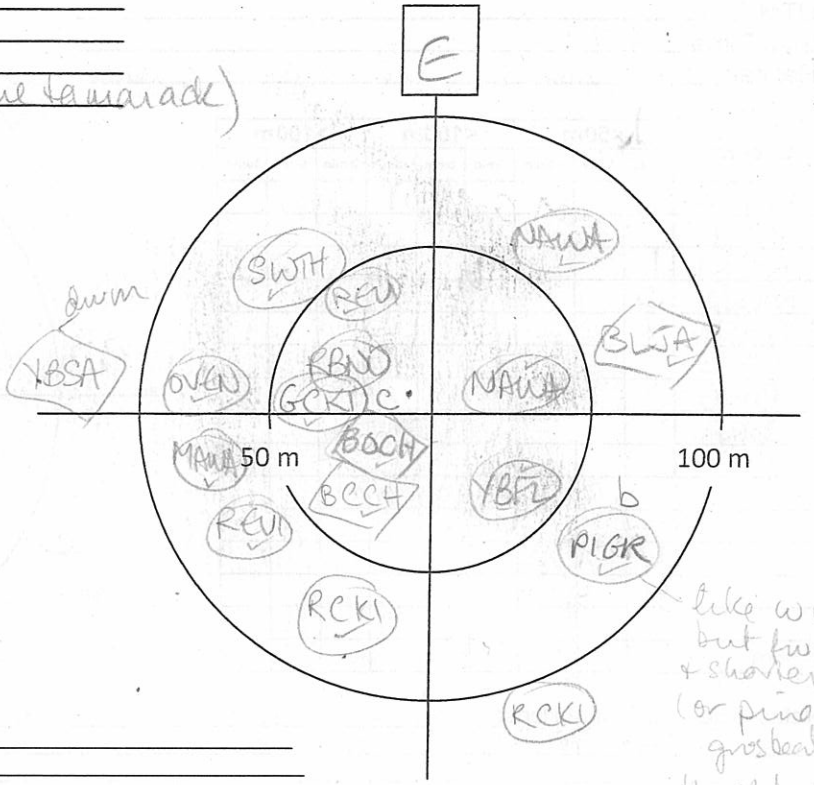

Notes/Incidental observations: Red Squ

Point Count Name: BB20
UTM:
Start Time 0705
Habitat: Black spruce swamp - sphagnum, understory very open

Species	<50m			<100m			>100m		
	3min	5min	10min	3min	5min	10min	3 min	5min	10min
NAWA			2	1					
RCKI	1			1					1
GCKI	1								
BHVI	1								
WIWR				1					
WIWA						1			
BAWW						1			

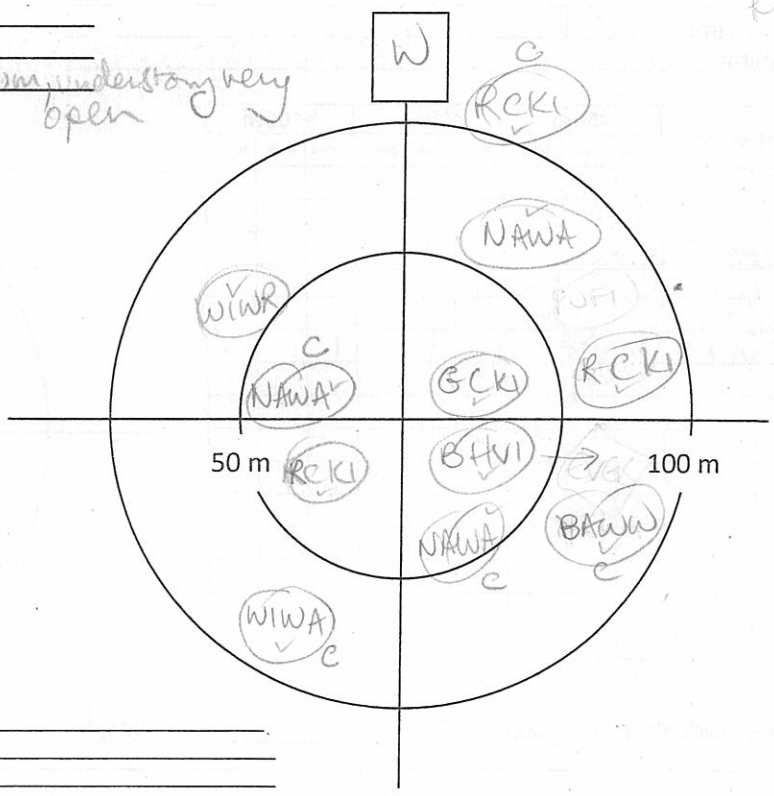

Notes/Incidental observations:

Project Number: TC121522
Survey Date: 14 June 13

AMEC Earth & Environmental
160 Traders Blvd East, Mississauga, ON L4Z 3K7
Tel: (905) 568-2929
Cell: (416) 459-6228
Fax: (905) 568-1686

Point Count Name: BB 22
UTM:
Start Time 0735
Habitat: Bl. Spruce swamp + birch + tamarack, sphagnum under

Species	<50m			<100m			>100m		
	3min	5min	10min	3min	5min	10min	3 min	5min	10min
NAWA	1					1			
RCKI		1		1					
GCKI	1								
NAWA	2								
BCCH	1			1					
YBFL				1					
PIWO									1
CORA							1		

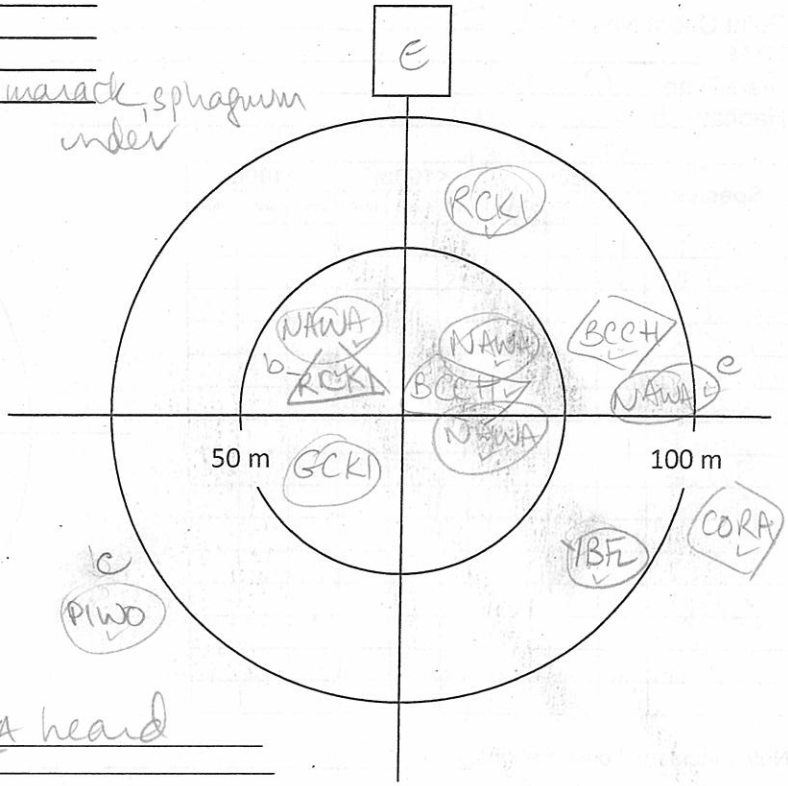

Notes/Incidental observations: Red squ, WIWA heard between this count and last

Point Count Name: BB 26
UTM:
Start Time 0801
Habitat: Black Spruce swamp with some birch + tamarack sphagnum under

Species	<50m			<100m			>100m		
	3min	5min	10min	3min	5min	10min	3 min	5min	10min
NAWA	1								
HAWO	1								
NAWA					1				
SWTH				1					
REVI				1					
OVEN					1		1		

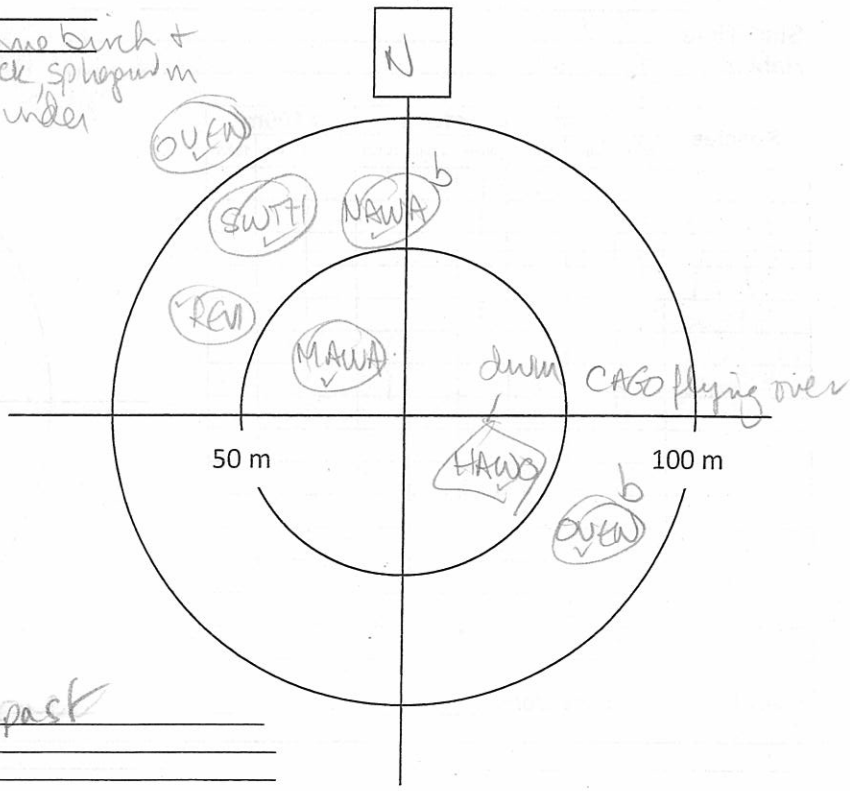

Notes/Incidental observations: CAGO flying past

Project Number: TC121522
Survey Date: 14 June 13

AMEC Earth & Environmental
160 Traders Blvd East, Mississauga, ON L4Z 3K7
Tel: (905) 568-2929
Cell: (416) 459-6228
Fax: (905) 568-1686

Point Count Name: BB23
UTM: _____
Start Time 0822
Habitat: Black spruce swamp - sphagnum under

Species	<50m			<100m			>100m		
	3min	5min	10min	3min	5min	10min	3 min	5min	10min
RCKI				1					1
NAWA				1					1
CORA									1

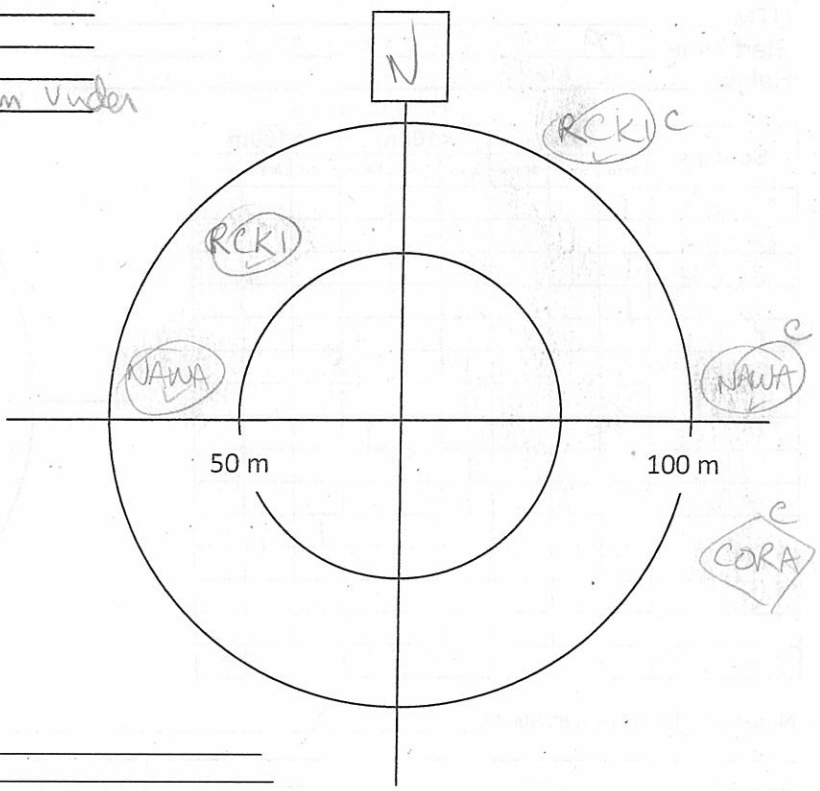

Notes/Incidental observations: Red squ very quiet

Point Count Name: BB24
UTM: _____
Start Time 0843
Habitat: Black spruce/tamarack swamp

Species	<50m			<100m			>100m		
	3min	5min	10min	3min	5min	10min	3 min	5min	10min
YBFL	1								
RCKI			1						
NAWA	1		1						
BBWO			1						
MAWA	1								
BHVI	1			1					
WIWR				1					
WTSP						1			

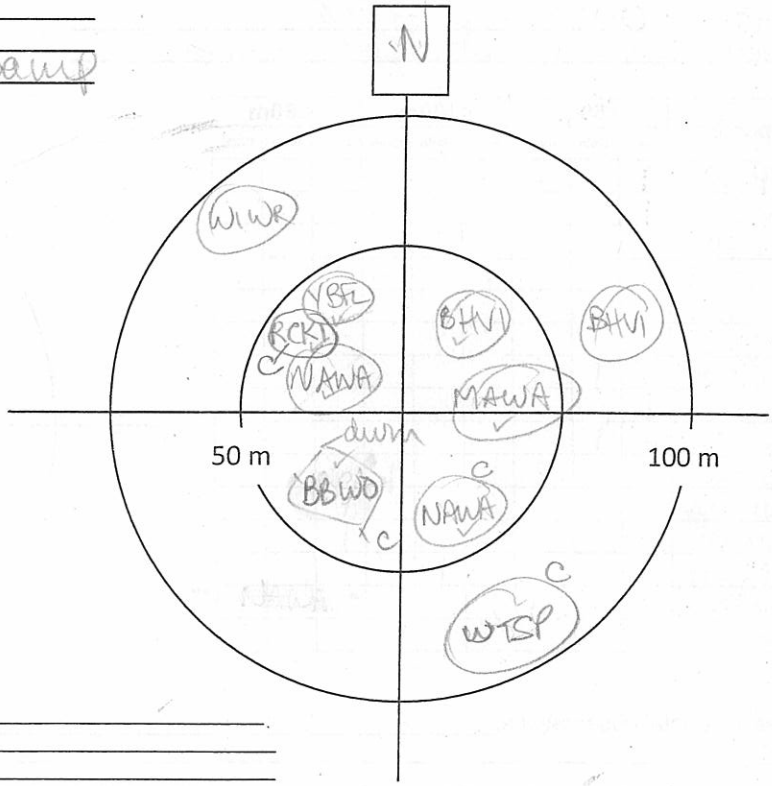

Notes/Incidental observations: _____

Project Number: TC121522
Survey Date: 14 June 13

AMEC Earth & Environmental
160 Traders Blvd East, Mississauga, ON L4Z 3K7
Tel: (905) 568-2929
Cell: (416) 459-6228
Fax: (905) 568-1686

Point Count Name: BB 28
UTM: _____
Start Time 0934 (correct)
Habitat: Black spruce & leatherneck forest/swamp + sphagnum

Species	<50m			<100m			>100m		
	3min	5min	10min	3min	5min	10min	3 min	5min	10min
NAWA	1								
GCKI		1							
BCCH	1								
WIWR	1								
PUFI			1						
NAWA				1					
RCKI				1					
PIWO						1			
YBFL				1					
RBNU				1					
WIWR							1		

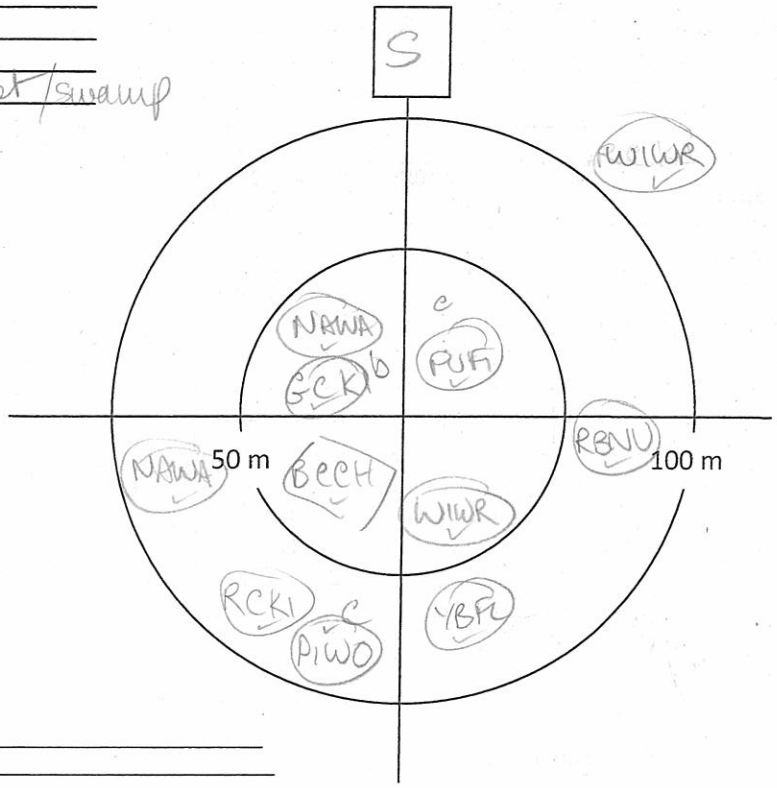

Notes/Incidental observations: _____

Point Count Name: BB 25
UTM: _____
Start Time 0909 (correct)
Habitat: spruce forest (some birch)

Species	<50m			<100m			>100m		
	3min	5min	10min	3min	5min	10min	3 min	5min	10min
YBSA	1								
REVI	1								
BLBW	1								
MAWA	1			1					
BAWW	1								
NOPA		1							
BCCH		1							
RCKI	1								
GCKI		1							
CORA				1		1			
NAWA				1					
SWTH				1			1		
CMWA					1				
OVEN				1					
BRCR				1					

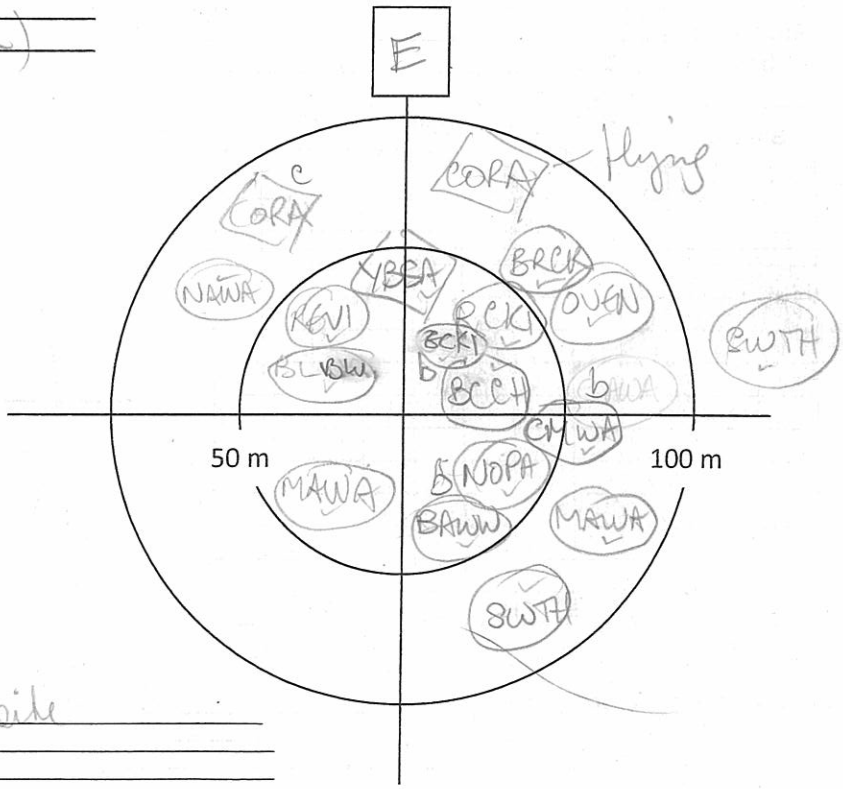

Notes/Incidental observations: very active site

Project Number: TC121522
Survey Date: 14 June 13

AMEC Earth & Environmental
160 Traders Blvd East, Mississauga, ON L4Z 3K7
Tel: (905) 568-2929
Cell: (416) 459-6228
Fax: (905) 568-1686

Point Count Name: BB29
UTM:
Start Time 0955
Habitat: Spruce forest - lots of DWD - sphagnum + feathermoss under Black

Species	<50m			<100m			>100m		
	3min	5min	10min	3min	5min	10min	3 min	5min	10min
WTSP		1							
NAWA	1								
SWTH				1					
YBFL				1					
MAWA				2					
WIWR						1			
CORA							2		

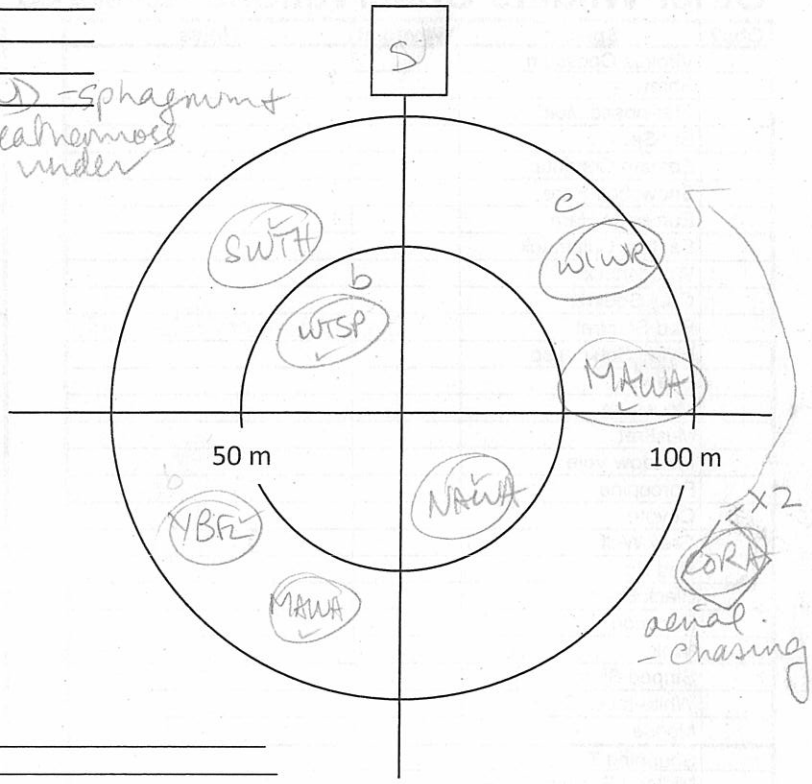

Notes/Incidental observations:

Point Count Name: BB27
UTM:
Start Time 1021
Habitat: Spruce forest - on top of a ridge - rocky outcrops, lichen Black

Species	<50m			<100m			>100m		
	3min	5min	10min	3min	5min	10min	3 min	5min	10min
RCKI	1			1					
BRCR		1							
NAWA				2					
BHVI				1					1
CORA									1

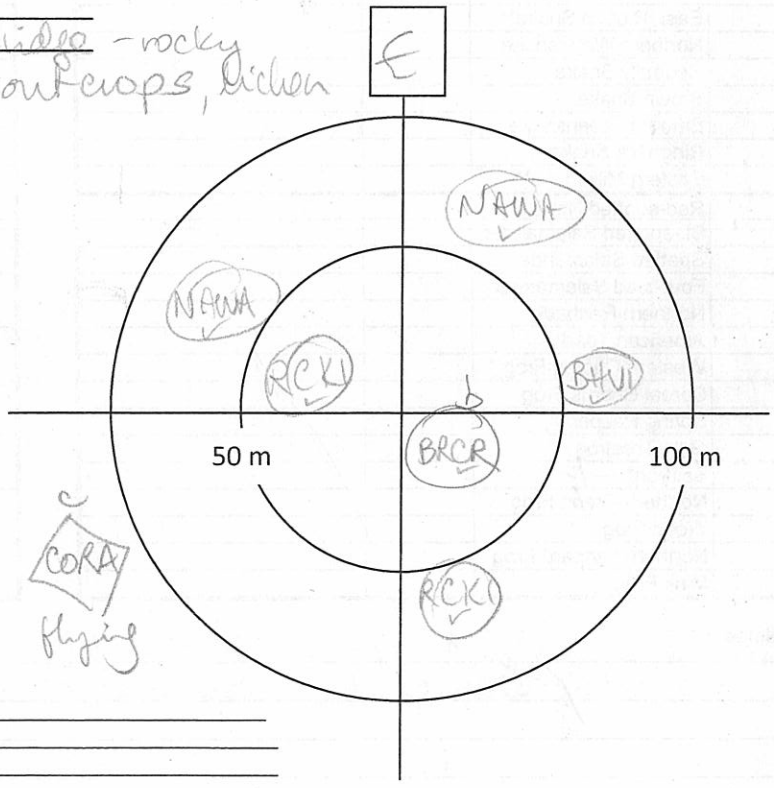

Notes/Incidental observations:

Project Number: TC121522
Survey Date: 14 June 13

AMEC Earth & Environmental
160 Traders Blvd East, Mississauga, ON L4Z 3K7
Tel: (905) 568-2929
Cell: (416) 459-6228
Fax: (905) 568-1686

Other Wildlife Observations **Species at Risk

Obs?	Species	Waypoint	Notes
	Virginia Opossum		
	Shrew sp		
	Star-nosed Mole		
	Bat Sp.		
	Eastern Cottontail		
	Snowshoe Hare		
	European Hare		
	Eastern Chipmunk		
	Woodchuck		
	Grey Squirrel		
	Red Squirrel		several points
	Flying Squirrel sp		
	Beaver		
	Mouse sp		
	Muskrat		
	Meadow Vole		
	Porcupine		
	Coyote		
	Grey Wolf		
	Red Fox		
	Black Bear		
	Raccoon		
	Mink		
	Striped Skunk		
	White-tailed Deer		
	Moose		throughout
	Snapping Turtle**		
	Midland Painted Turtle		
	Western Painted Turtle		
	Northern Map Turtle**		
	Blanding's Turtle**		
	Eastern Gartersnake		
	East. Ribbon Snake**		
	Northern Watersnake		
	Redbelly Snake		
	Brown Snake		
	Smooth Greensnake		
	Ringneck Snake		
	Eastern Milksnake**		
	Red-spotted Newt		
	Bl.-spotted Salamander		
	Spotted Salamander		
	Four-toed Salamander		
	Northern Redback		
	American Toad		
	Western Chorus Frog**		
	Boreal Chorus Frog		
	Spring Peeper		
	Gray Treefrog		
	Bullfrog*		
	Northern Green Frog		
	Wood Frog		
	Northern Leopard Frog		
	Mink Frog		

Other Species	Waypoint	Notes

Notes Abundant moose browse at - moose seemed less abundant than further south

AMEC Earth & Environmental
160 Traders Blvd East, Mississauga, ON L4Z 3K7
Tel: (905) 568-2929
Cell: (416) 459-6228
Fax: (905) 568-1686

Breeding Bird Point Count Survey

Project Name: IMG		Project Number: TC121522	
Crew Leader: JEFF BELSDON	Observers: JEFF BELSDON		
Date: JUNE 15/2013	Start Time (24hr): 5:14	End Time (24hr): 10:00	
Weather: CLEAR, CALM	Temperature:	Wind: 1-2	Precipitation (Circle): (0) None 1 Haze/Fog 2 Drizzle 3 Rain

Point Count Name: NEW POINT FROM JON (NEW BBIS)
UTM: GPS 146
Start Time 5:14 - 5:24 a.m.
Habitat:

Species	<50m			<100m			>100m		
	3m in	5m in	10m in	3m in	5m in	10m in	3m in	5m in	10m in
WTSP							1		
REVI	1			1					
OVEN				III					
WIWR					1				
SWTH				1					
HETH						1			

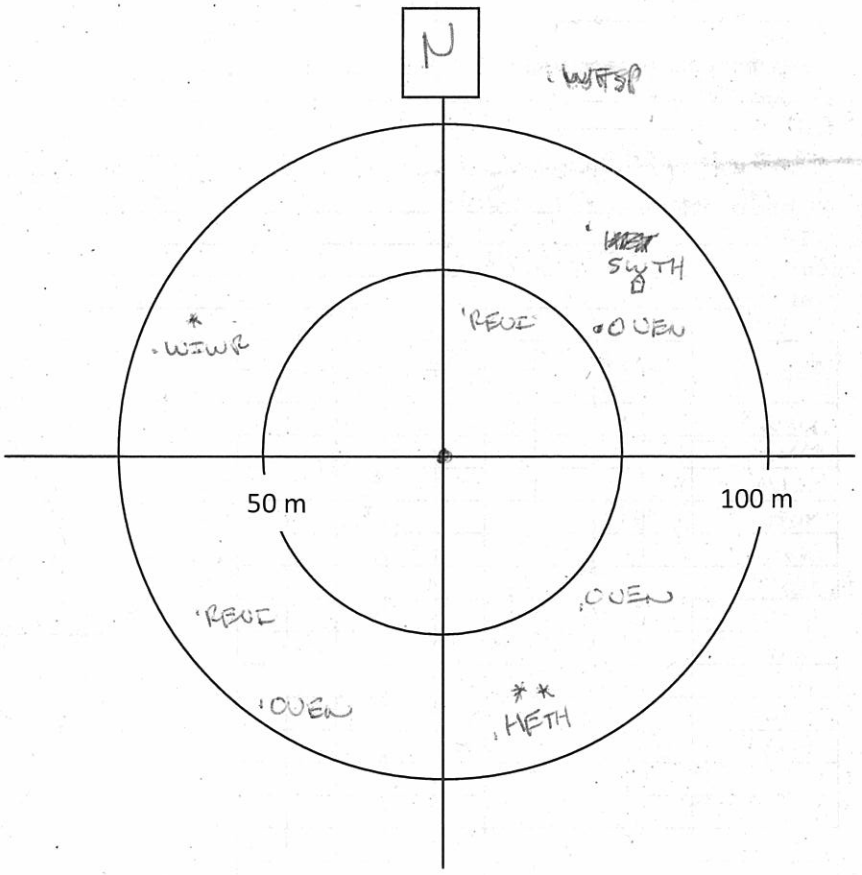

Notes/Incidental observations:

Project Number: TC121522
Survey Date: JUNE 15/2013

AMEC Earth & Environmental
160 Traders Blvd East, Mississauga, ON L4Z 3K7
Tel: (905) 568-2929
Cell: (416) 459-6228
Fax: (905) 568-1686

Point Count Name: B105
UTM:
Start Time 5:35 - 5:45
Habitat:

Species	<50m			<100m			>100m		
	3min	5min	10min	3min	5min	10min	3min	5min	10min
WIWR				1		1			
PIWO								1	
SWTH				11					
BCCH					1				
REVI	1			1					
OVEN						11			
WTSP				1			1		
MAWA				11					
NAWA	1			1					
YRWA			1						

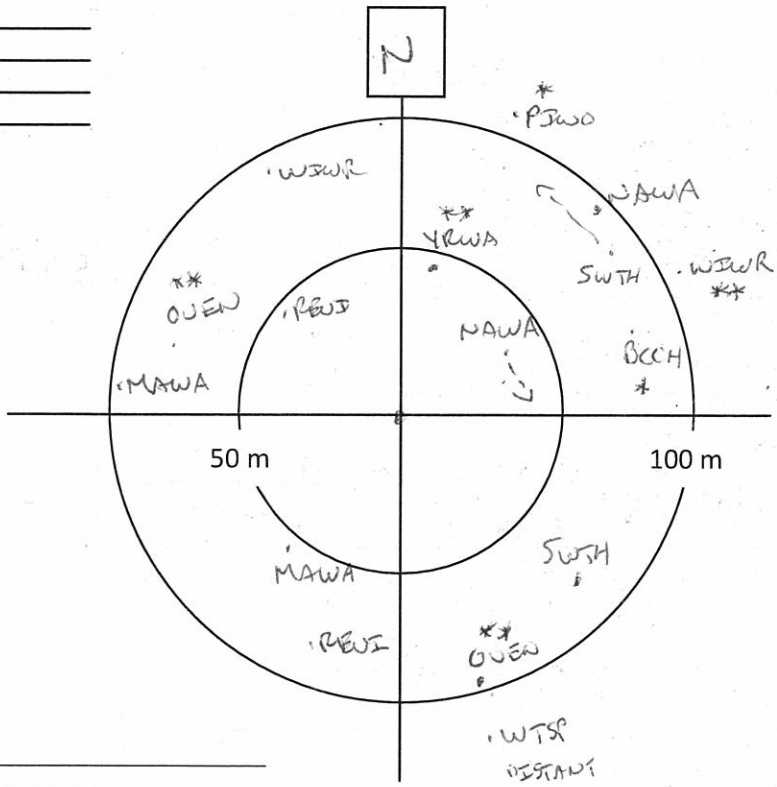

Notes/Incidental observations: RESQ

Point Count Name: B104
UTM:
Start Time 5:54 - 6:04 am
Habitat:

Species	<50m			<100m			>100m		
	3min	5min	10min	3min	5min	10min	3min	5min	10min
NAWA				111					
MAWA	11			1					
YRWA	11								
YBFL	11								
DOWO				1					
YBSA				1		1			
WTSP							1		1
SWTH				11					
HETH				1					
BHVI					1				
RCKI		1							

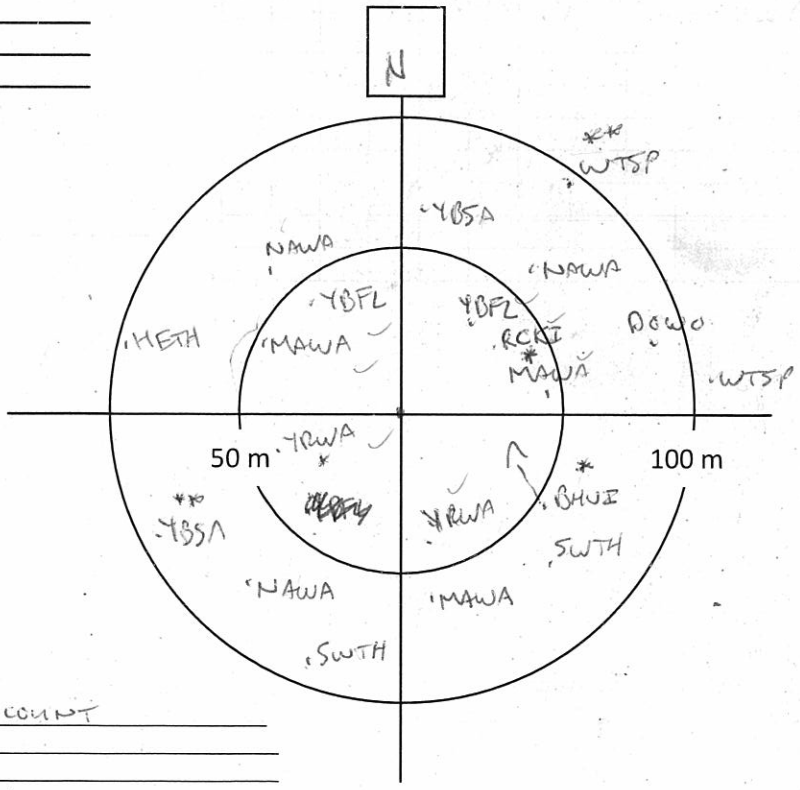

Notes/Incidental observations: VERY BUSY POINT COUNT

Project Number: TC121522
Survey Date: JUNE 15/2013

AMEC Earth & Environmental
160 Traders Blvd East, Mississauga, ON L4Z 3K7
Tel: (905) 568-2929
Cell: (416) 459-6228
Fax: (905) 568-1686

PointCountName: B103
UTM:
StartTime 6:13-6:23
Habitat:

Species	<50m			<100m			>100m		
	3min	5min	10min	3min	5min	10min	3min	5min	10min
WTSP				1					
WIWR					1				
SWTH				1					
METH	1								
~~MAWA~~				111					
NAWA	11								
YRWA	1			11					
RCKI				1					
BHVI						1			
YBFL				11					

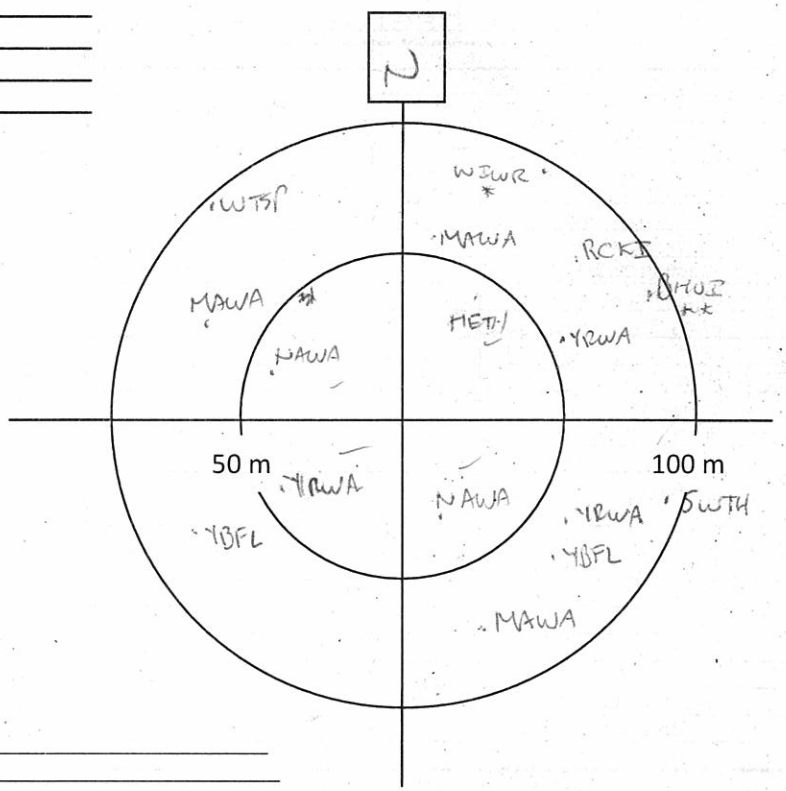

Notes/Incidental observations:

PointCountName: B99
UTM:
StartTime 6:33-6:43
Habitat:

Species	<50m			<100m			>100m		
	3min	5min	10min	3min	5min	10min	3min	5min	10min
EVGR				1					
NOPA	1				1				
OVEN				1					
RBNU				1					
YRWA	1			1					
BBWA	11								
BWHA						1			
REVI				1					
WTSP					1				
BLBW				1					

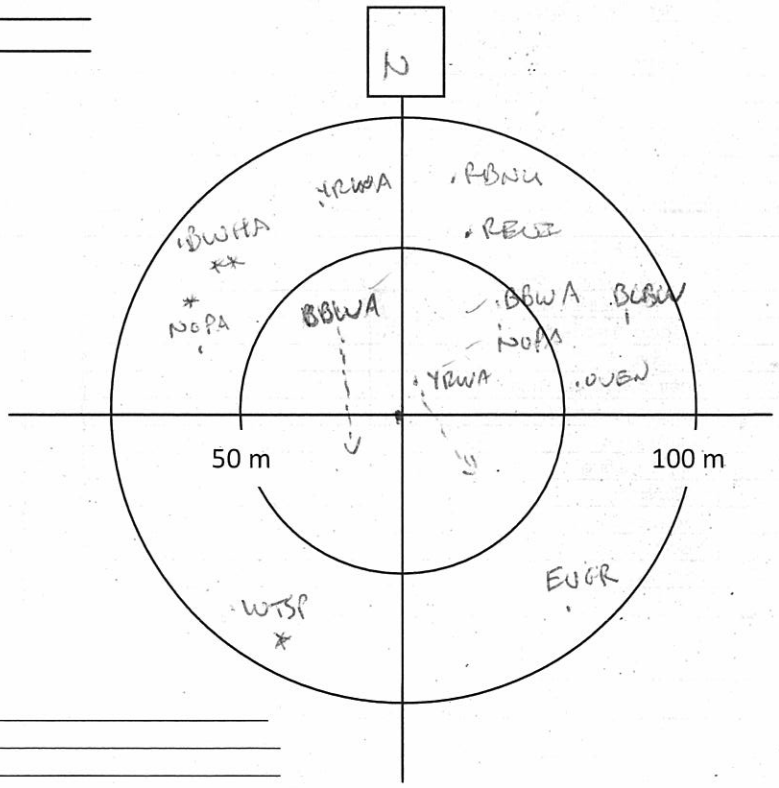

Notes/Incidental observations:

AMEC Earth & Environmental
160 Traders Blvd East, Mississauga, ON L4Z 3K7
Tel: (905) 568-2929
Cell: (416) 459-6228
Fax: (905) 568-1686

Breeding Bird Point Count Survey

Project Name:		Project Number:	
Crew Leader:		Observers:	
Date:	Start Time (24hr):	End Time (24hr):	
Weather:	Temperature:	Wind:	Precipitation (Circle): 0 None 1 Haze/Fog 2 Drizzle 3 Rain

Point Count Name: B100
UTM: TC121522
Start Time 6:54 - 7:04 JUNE 15/2013
Habitat:

Species	<50m			<100m			>100m		
	3min	5min	10min	3min	5min	10min	3min	5min	10min
SWTH				1					
HETH							1		
YRWA	1			1					
RCKI	1			1					
NAWA	1			11					
BBWA	1								
NOPA				1					
WTSP				1	1		1		
ALFL	1			1					
COGR	1								
OVEN						1			
NCFL	1								1
MAWA			1						

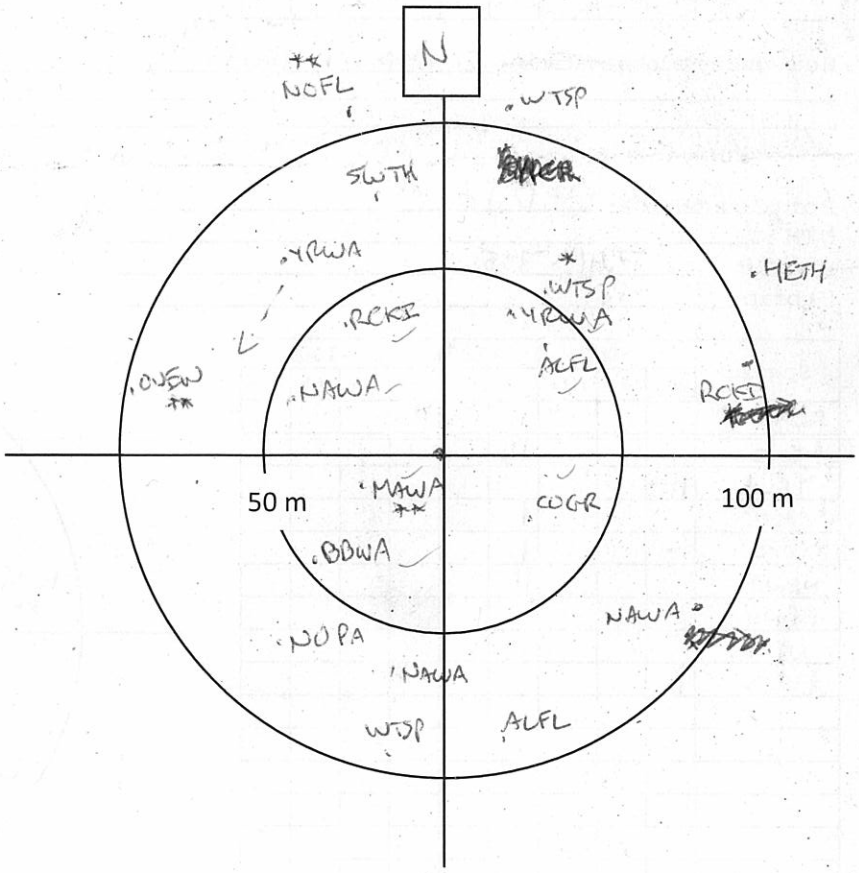

Notes/Incidental observations:

Project Number: TC121522
Survey Date: JUNE 15, 2013

AMEC Earth & Environmental
160 Traders Blvd East, Mississauga, ON L4Z 3K7
Tel: (905) 568-2929
Cell: (416) 459-6228
Fax: (905) 568-1686

Point Count Name: B96
UTM:
Start Time 7:19 - 7:29
Habitat:

Species	<50m			<100m			>100m		
	3m in	5m in	10m in	3m in	5m in	10m in	3m in	5m in	10m in
TEWA	II								
REVI				I					
YRWA	II								
RCKI	I			II					
SWTH				I					
BAWW	I								
RBNU					I				
WTSP						I			
YBFL					I				
OVEN						I			
MAWA	I								

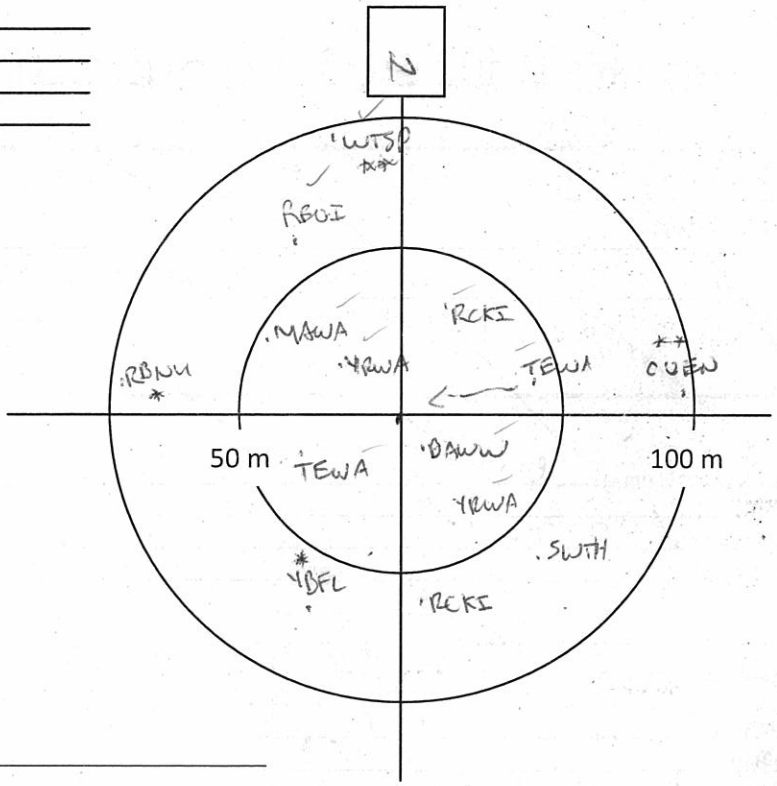

Notes/Incidental observations: 2 PAIRS OF TEWA

Point Count Name: B97
UTM:
Start Time 7:41 - 7:51
Habitat:

Species	<50m			<100m			>100m		
	3m in	5m in	10m in	3m in	5m in	10m in	3m in	5m in	10m in
RCKI				II					
REVI				III					
YRWA	II								
MAWA			I	I					
YBFL				I					
NAWA				II					
RBNU					I				
WTSP						I			
BHVI	I								

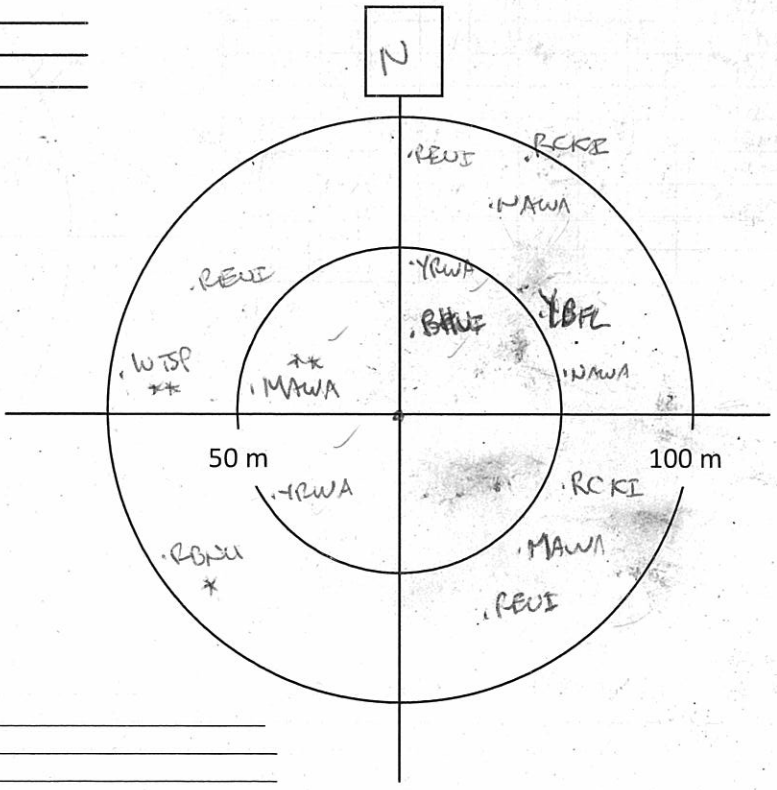

Notes/Incidental observations:

AMEC Earth & Environmental
160 Traders Blvd East, Mississauga, ON L4Z 3K7
Tel: (905) 568-2929
Cell: (416) 459-6228
Fax: (905) 568-1686

Breeding Bird Point Count Survey

Project Name: IMG		Project Number: TC121522	
Crew Leader:		Observers:	
Date: JUNE 15/2013	Start Time (24hr):		End Time (24hr):
Weather:	Temperature:	Wind:	Precipitation (Circle): 0 None 1 Haze/Fog 2 Drizzle 3 Rain

Point Count Name: B101
UTM:
Start Time 5:00-5:10
Habitat:

Species	<50m			<100m			>100m		
	3min	5min	10min	3min	5min	10min	3min	5min	10min
OVEN				1	1				
WTSP					1				
YRWA	II								
NAWA	1								
BHVI				1					
MAWA				1					
RCKI						1			
SWTH				1	1				
RBNU						1			

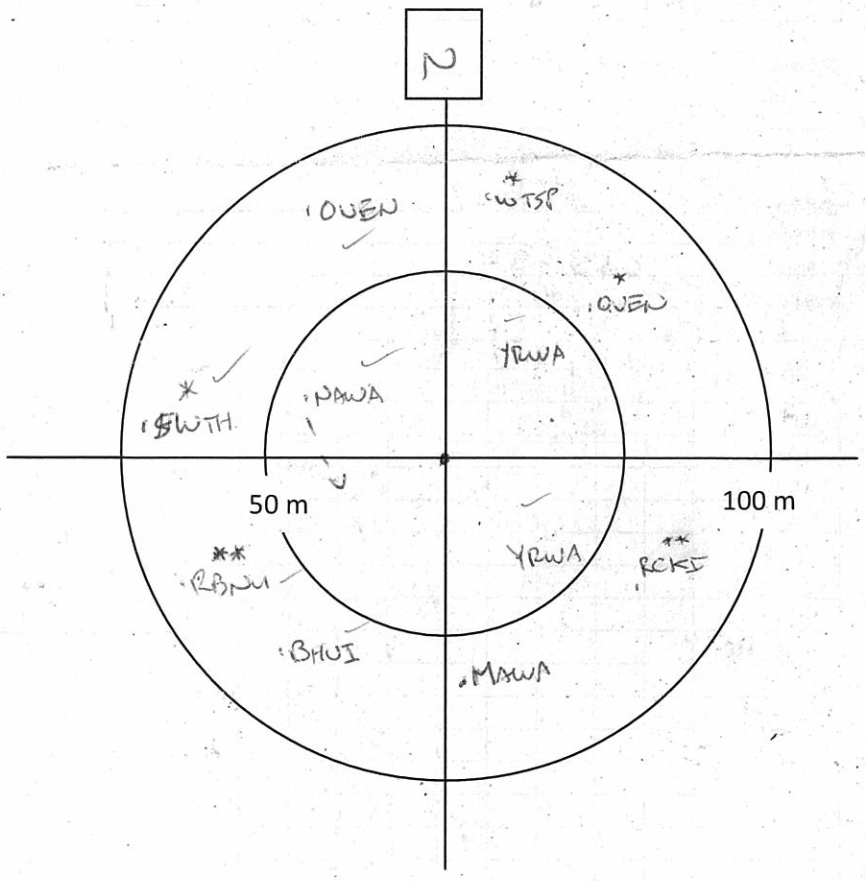

Notes/Incidental observations:

Project Number: PC121522
Survey Date: JUNE 15/2013

AMEC Earth & Environmental
160 Traders Blvd East, Mississauga, ON L4Z 3K7
Tel: (905) 568-2929
Cell: (416) 459-6228
Fax: (905) 568-1686

PointCountName: PC98
UTM:
StartTime 8:26 - 8:36
Habitat:

Species	<50m			<100m			>100m		
	3min	5min	10min	3min	5min	10min	3min	5min	10min
WTSP	1							1	
RCKI				1					
BOCH		1							
YBFL				II					
BHVI				1					
NAWA	II								
MAWA	1			1					
YRWA				1					

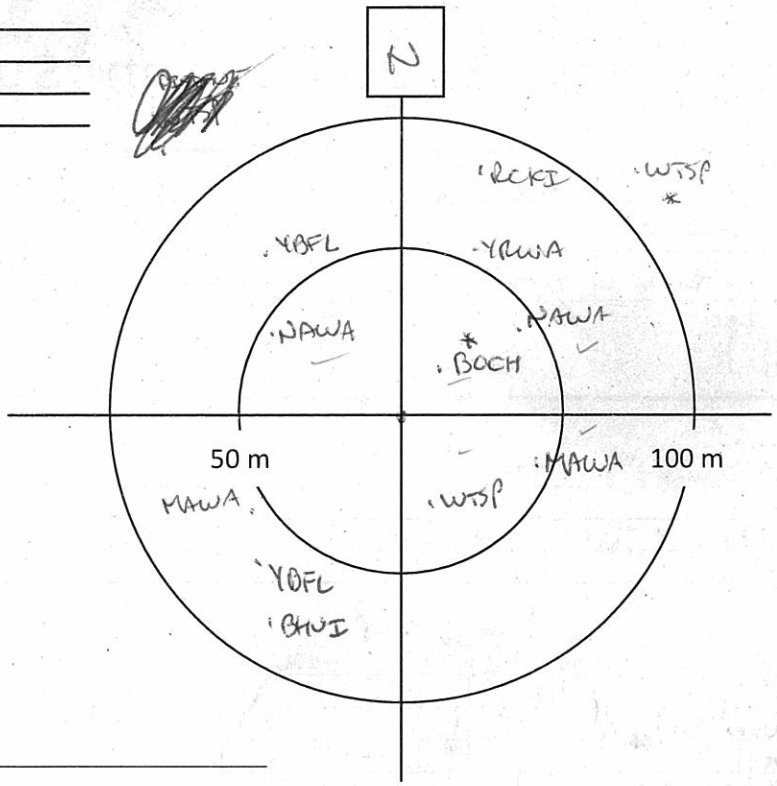

Notes/Incidental observations:

PointCountName: B102
UTM:
StartTime 8:53 - 9:03
Habitat:

Species	<50m			<100m			>100m		
	3min	5min	10min	3min	5min	10min	3min	5min	10min
WTSP				II			1		
NAWA	1								
MAWA	1								
YBFL				1			1		
ALFL				1					
RCKI				1	1				
SWSP				1					
YRWA	1			1	1				
SWTH						1			

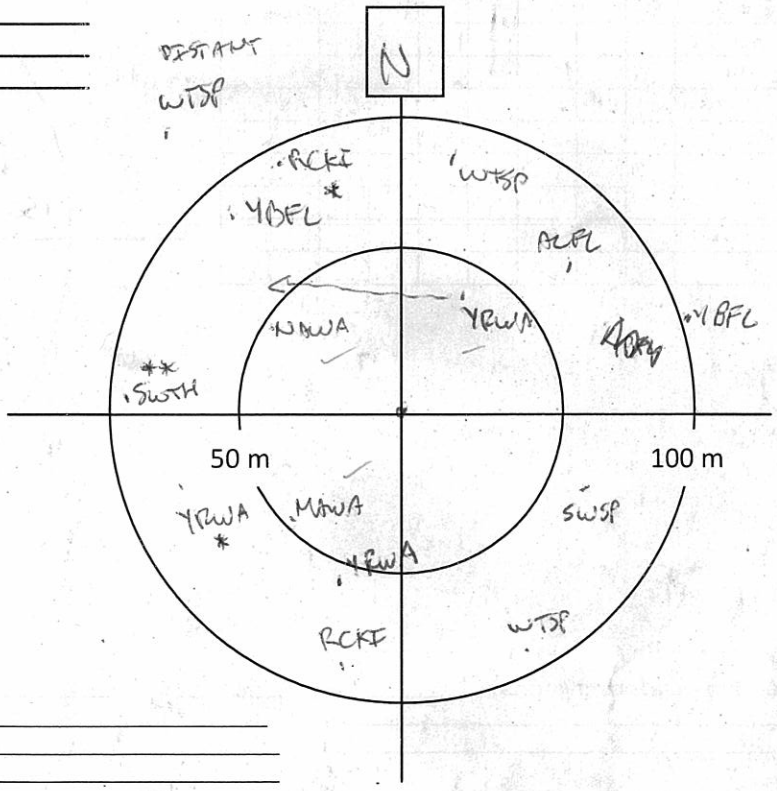

Notes/Incidental observations:

Project Number: TC121522
Survey Date: JUNE 15/2013

AMEC Earth & Environmental
160 Traders Blvd East, Mississauga, ON L4Z 3K7
Tel: (905) 568-2929
Cell: (416) 459-6228
Fax: (905) 568-1686

PointCountName: B108
UTM:
StartTime 9:24 - 9:34
Habitat:

Species	<50m			<100m			>100m		
	3min	5min	10min	3min	5min	10min	3min	5min	10min
BAWW				1					
BLBW				1					
WTSP								1	
YBSA	1								
YRWA	1	1							
BCCH	1								
RCKI				1					
MAWA	1			1					
REVI	1								
OVEN	1			1					
NAWA				1					

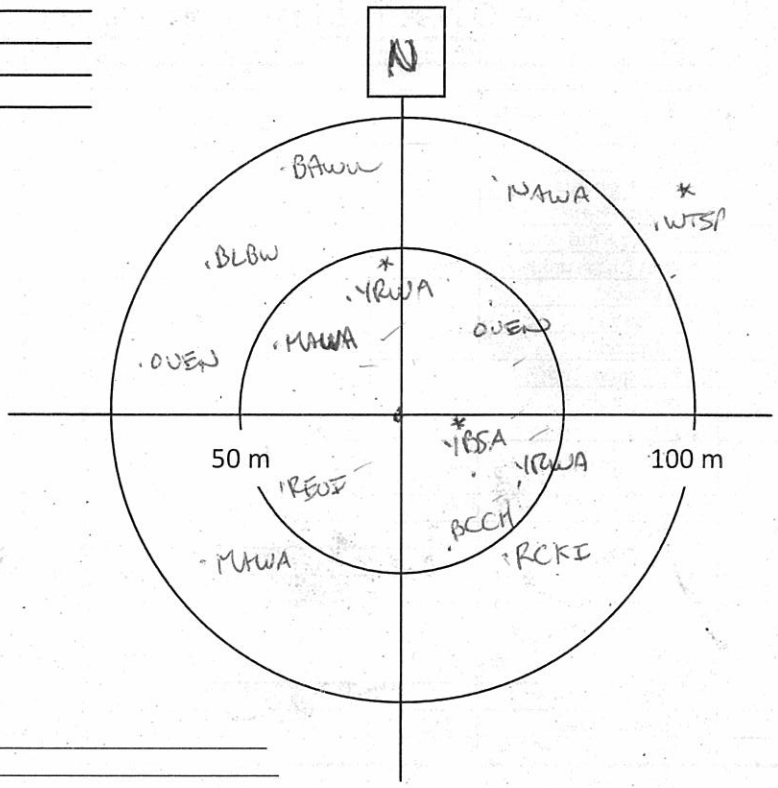

Notes/Incidental observations: RESQ

PointCountName: B107
UTM:
StartTime 9:41 - 9:51
Habitat:

Species	<50m			<100m			>100m		
	3min	5min	10min	3min	5min	10min	3min	5min	10min
REVI				11					
OVEN	1			1			1		
METH				1					
WIWR				1					
NOPA				1					
YBSA	1								

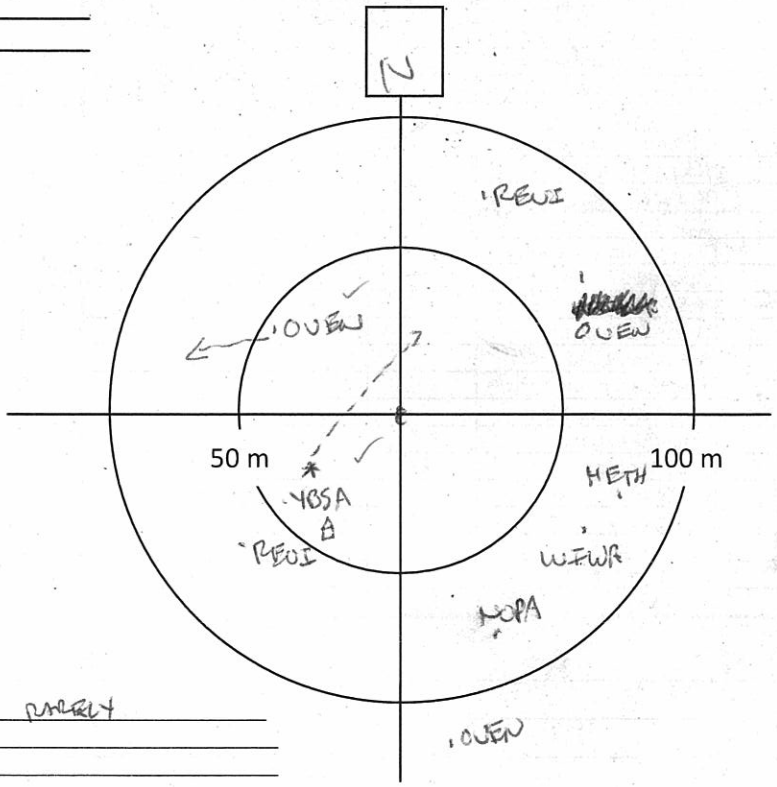

Notes/Incidental observations: QUIET - SINGING RARELY

AMEC Earth & Environmental
160 Traders Blvd East, Mississauga, ON L4Z 3K7
Tel: (905) 568-2929
Cell: (416) 459-6228
Fax: (905) 568-1686

Breeding Bird Point Count Survey

Project Name: IAM Gold		**Project Number:** TC121522	
Crew Leader: Jeff Balsdon	**Observers:** Sarah Mainguy		
Date: 15 June 13	**Start Time (24hr):** 0525	**End Time (24hr):** 10:45	
Weather: Mainly sunny	**Temperature:** 15	**Wind:** 0	**Precipitation (Circle):** (0) None 1 Haze/Fog 2 Drizzle 3 Rain

Point Count Name: BB 181
UTM: _____
Start Time 0535
Habitat: poplar/spruce

Species	<50m			<100m			>100m		
	3min	5min	10min	3min	5min	10min	3 min	5min	10min
REVI	1		1	1					
NAWA			1						
BTGW			1	1					
MAWA	1								
HAWO	1								
VEER				1					
BTBW				1					
BCCH				1					
OVEN				1					1
SWTH				1					1
WIWR							1		

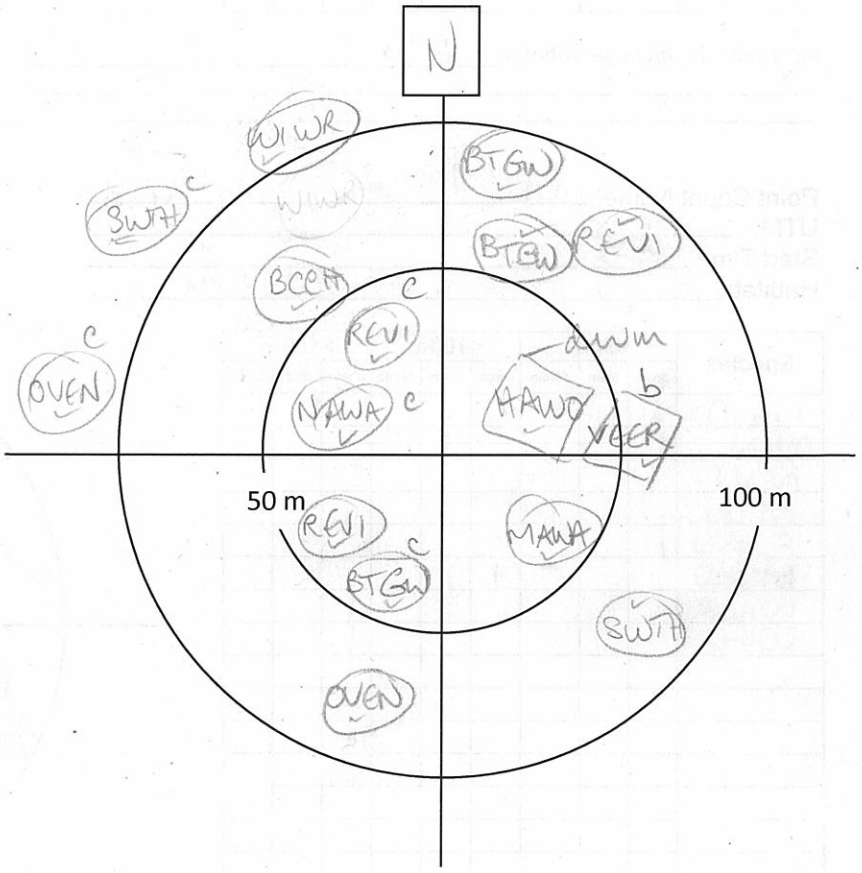

Notes/Incidental observations: Red Squirrel
heard boreal chickadee as came out of the area

Project Number: TC121522
Survey Date: 15 June 13

AMEC Earth & Environmental
160 Traders Blvd East, Mississauga, ON L4Z 3K7
Tel: (905) 568-2929
Cell: (416) 459-6228
Fax: (905) 568-1686

Point Count Name: BB180
UTM:
Start Time 0607
Habitat: fir / cedar forest

Species	<50m			<100m			>100m		
	3min	5min	10min	3min	5min	10min	3 min	5min	10min
NAWA	1								
NOPA	1								
YRWA	1								
BTBW	1								
WIWR				1					
SWTH				1					
BTGW					1				

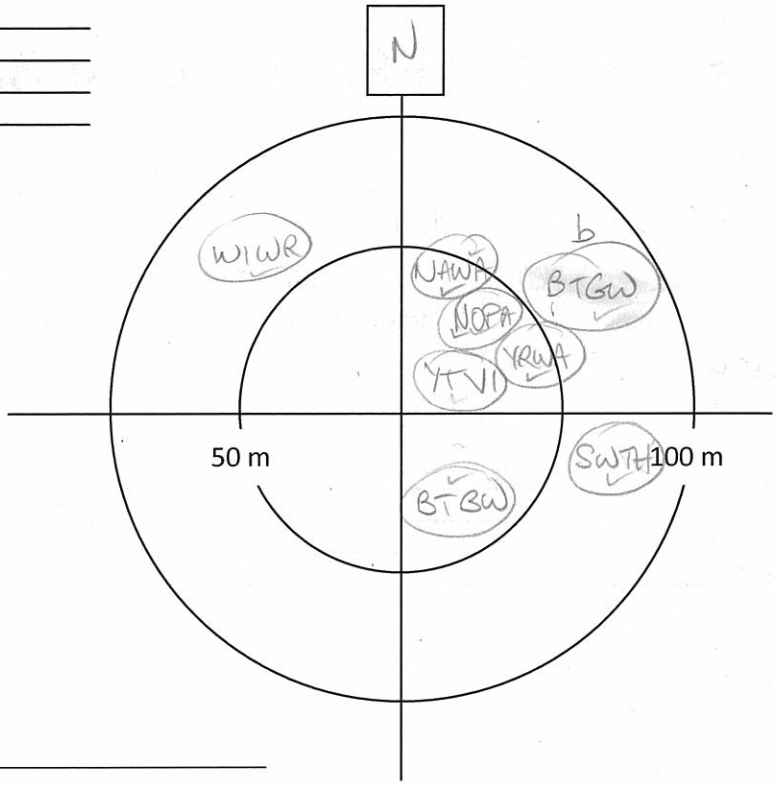

Notes/Incidental observations: YTVI

Point Count Name: BB179
UTM:
Start Time 0627
Habitat: birch + spruce forest + fir

Species	<50m			<100m			>100m		
	3min	5min	10min	3min	5min	10min	3 min	5min	10min
PIWO	1								
OVEN	1				1				
REVI	1								
BTBW			1						
RBNU	1								
BTGW				1					
WIWR							1		
COLO							1		

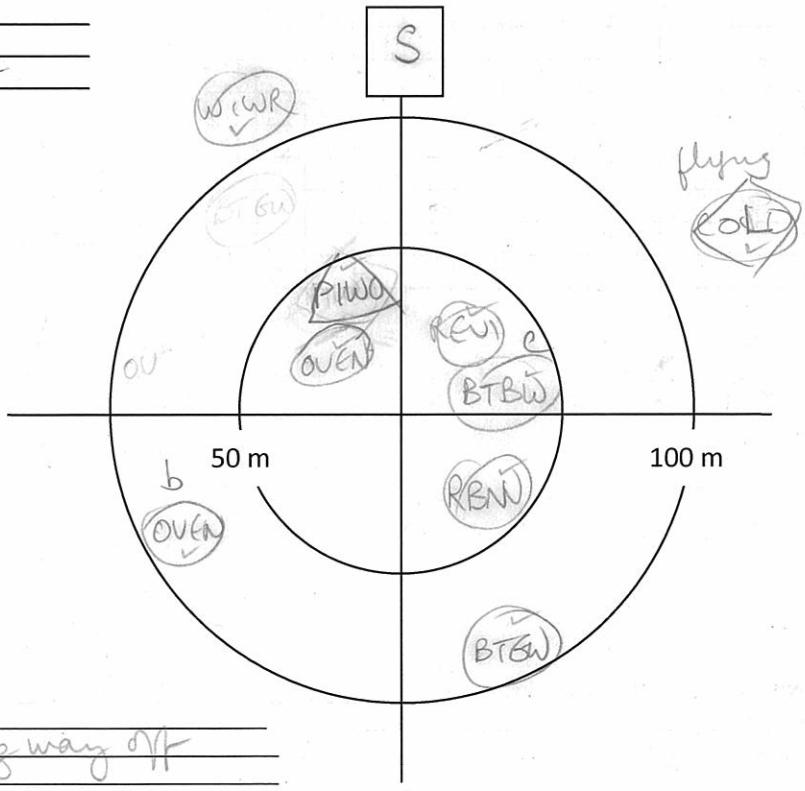

Notes/Incidental observations: Red squ
COLO probably from river - a long way off

AMEC Earth & Environmental
160 Traders Blvd East, Mississauga, ON L4Z 3K7
Tel: (905) 568-2929
Cell: (416) 459-6228
Fax: (905) 568-1686

Project Number: TC121522
Survey Date: 15 June 13

Point Count Name: BB178
UTM:
Start Time 0650
Habitat: black spruce swamp (Sphagnum understory)

Species	<50m			<100m			>100m		
	3min	5min	10min	3min	5min	10min	3 min	5min	10min
BRCR	1								
REVI	1								
GCKI	1								
BCCH	1								
RCKI				1					
BOCH			1						
YBFL						1			
NAWA					1				
YRWA				1			1		
BHVI						1			
NAWA							1		
SWTH							1		

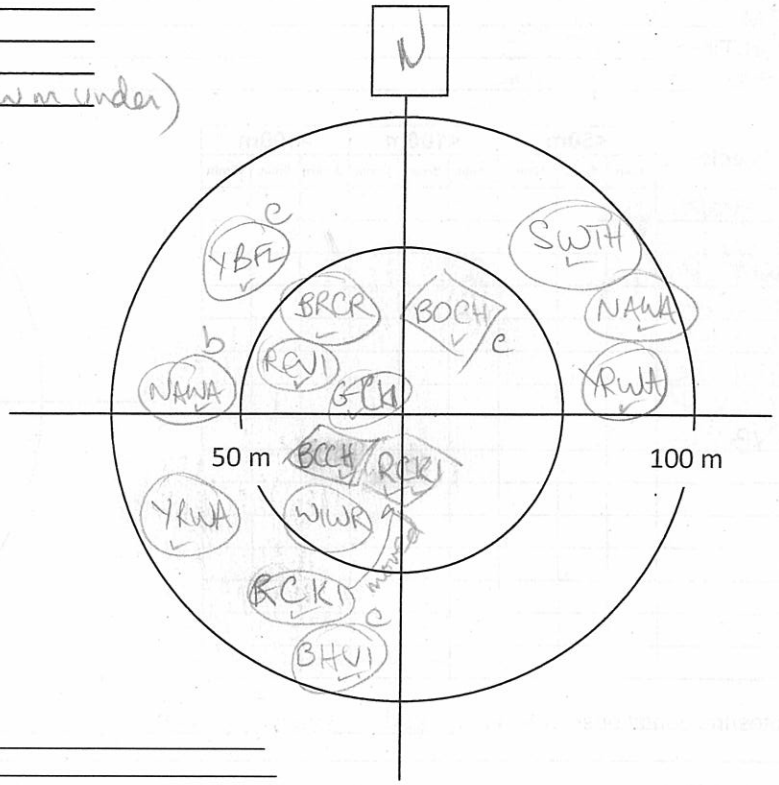

Notes/Incidental observations: Red squ

Point Count Name: 177
UTM:
Start Time 0720
Habitat: cedar forest / swamp, birch + spruce
Fen to S of here - close by

Species	<50m			<100m			>100m		
	3min	5min	10min	3min	5min	10min	3 min	5min	10min
REVI		1							
NAWA	1								
NOPA	1								
MAWA	1			1					
BLJA	1								
YBFL					1	1			
SWTH									1
COSN				1					
WTSP				1			1		
HAWO				1					
YRWA							1		
PIWO									1
WIWR							1		

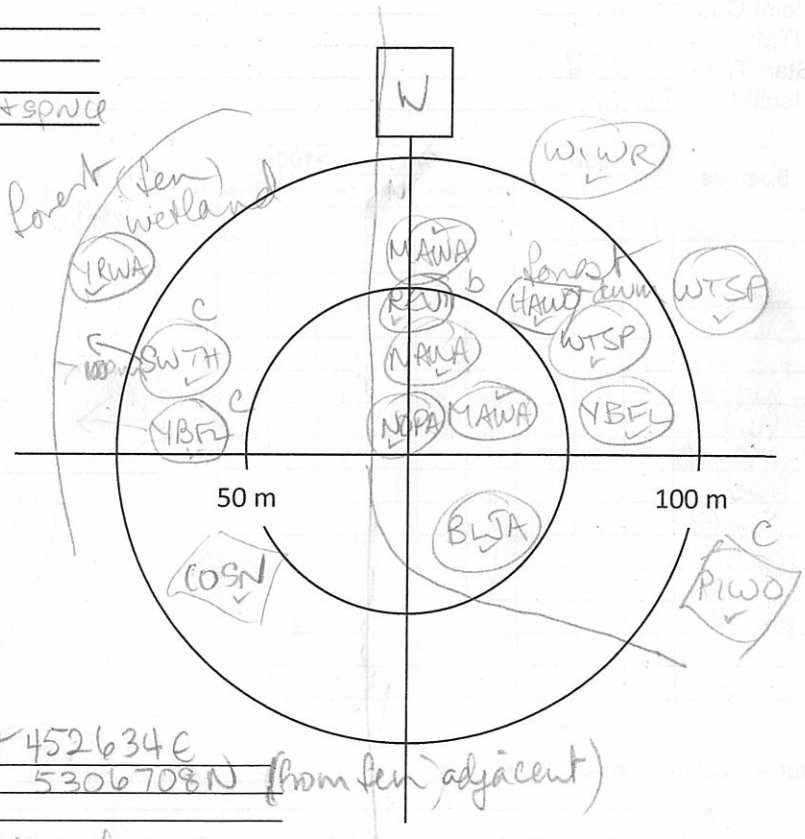

Notes/Incidental observations: heard RUBL at 452634E 5306708N (from fen) adjacent
SOSP from wetland
Red squ
Snowshoe hare (young) - in wetland
BUFR in wetland
CAWA a few minutes after walking toward
175 - 452452E 5306941N

Project Number: TC121522
Survey Date: 15 June 13

AMEC Earth & Environmental
160 Traders Blvd East, Mississauga, ON L4Z 3K7
Tel: (905) 568-2929
Cell: (416) 459-6228
Fax: (905) 568-1686

Point Count Name: BB175
UTM:
Start Time 0753
Habitat: treed fen

Species	<50m			<100m			>100m		
	3min	5min	10min	3min	5min	10min	3 min	5min	10min
NAWA	3								
REVI	1								
WTSP	1			2			1		
MAWA	1			2					
COYE									1
WIWR							1		
SWTH					1			1	
YBFL					1				

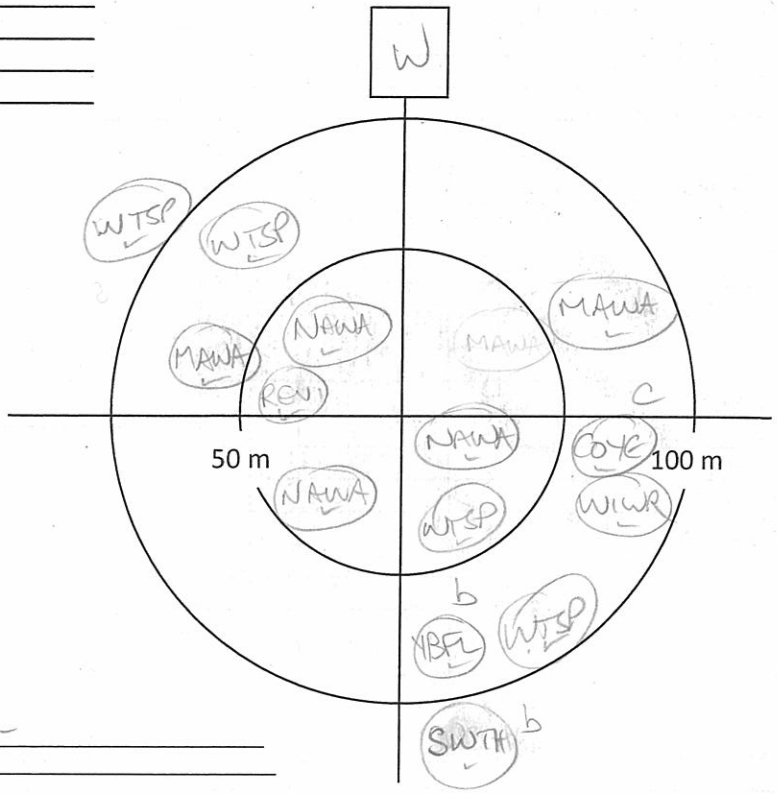

Notes/Incidental observations: CAWA near 176-

Point Count Name: BB169
UTM:
Start Time 0812
Habitat: treed fen - black spruce, sweet gale, tamarack - tree cover ~60%

Species	<50m			<100m			>100m		
	3min	5min	10min	3min	5min	10min	3 min	5min	10min
NAWA	1								
YBFL	1								
REVI			1		1				
SWSP	1								
RBNU	1								
WTSP				2			1		
ALFL					1				
MAWA				1					
HAWO				1		1			
SWTH				1					
REVI				1					
NOFL				1					
WIWR								1	

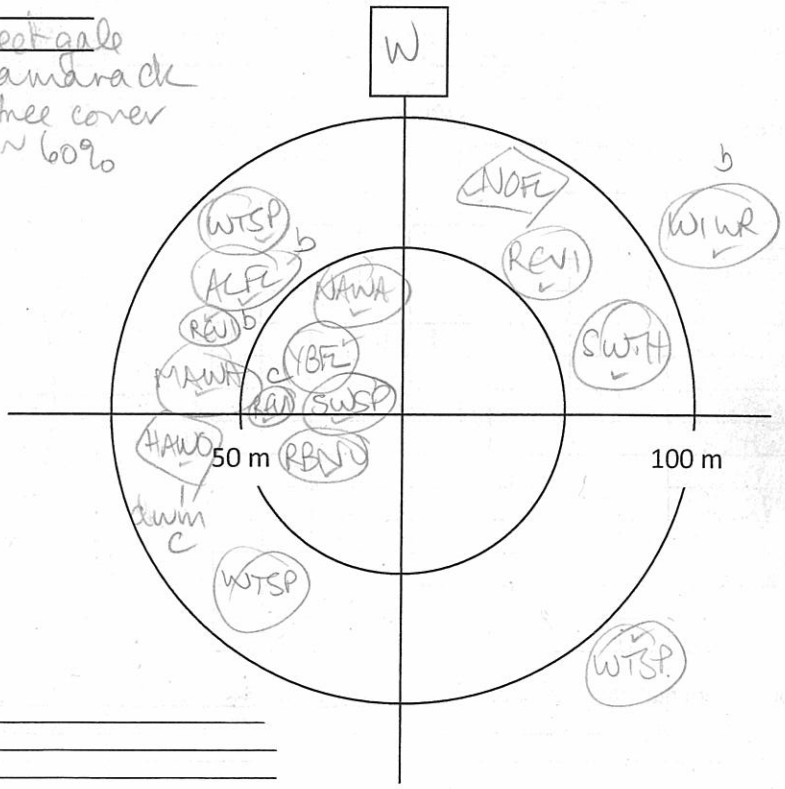

Notes/Incidental observations: Red Squ

Project Number: TC121522
Survey Date: 15 June 13

AMEC Earth & Environmental
160 Traders Blvd East, Mississauga, ON L4Z 3K7
Tel: (905) 568-2929
Cell: (416) 459-6228
Fax: (905) 568-1686

Point Count Name: BB 170
UTM: _____
Start Time 0835
Habitat: clearcut

Species	<50m			<100m			>100m		
	3min	5min	10min	3min	5min	10min	3 min	5min	10min
NAWA	1								
MAWA	3								
WTSP	1			1		2	1		
MOWA	1								
VRWA	1								
CSWA	1				1				
AMRO	1			1					
BLJA						1			
RCKI				1					
WIWR							1		

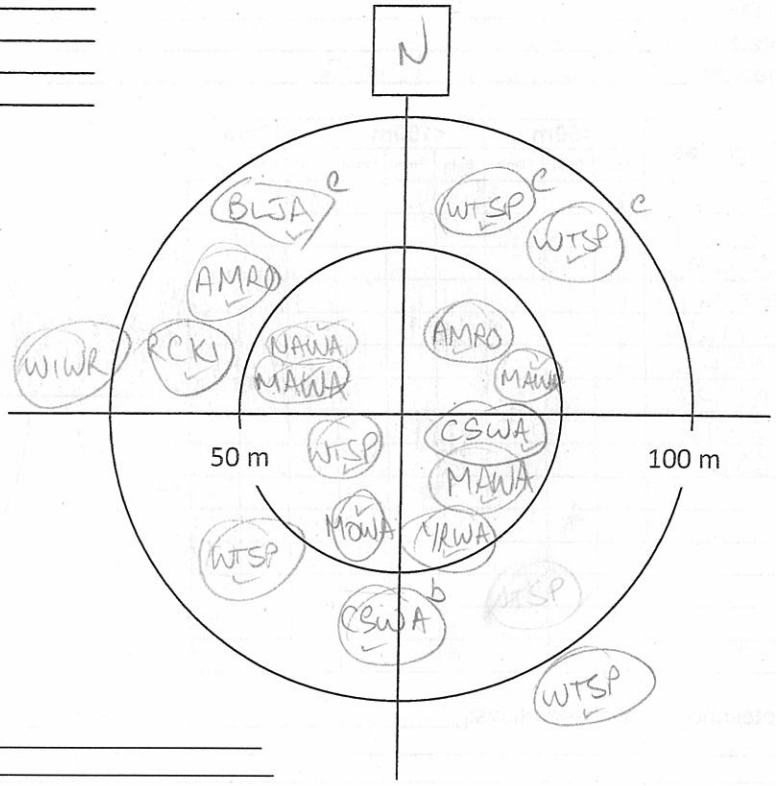

Notes/Incidental observations: red sqm

Point Count Name: BB171
UTM: _____
Start Time 0852
Habitat: clearcut / spruce forest

Species	<50m			<100m			>100m		
	3min	5min	10min	3min	5min	10min	3 min	5min	10min
CSWA	1								
MOWA	1								
RBNU			1						
BHVI	1								
MAWA	1								
NOPA	1								
BBWO	1		1						
WTSP				3			2		
REVI					1				
NAWA				1					
COSN				1					
YBSA				1					
AMRO				1					
SWTH									1

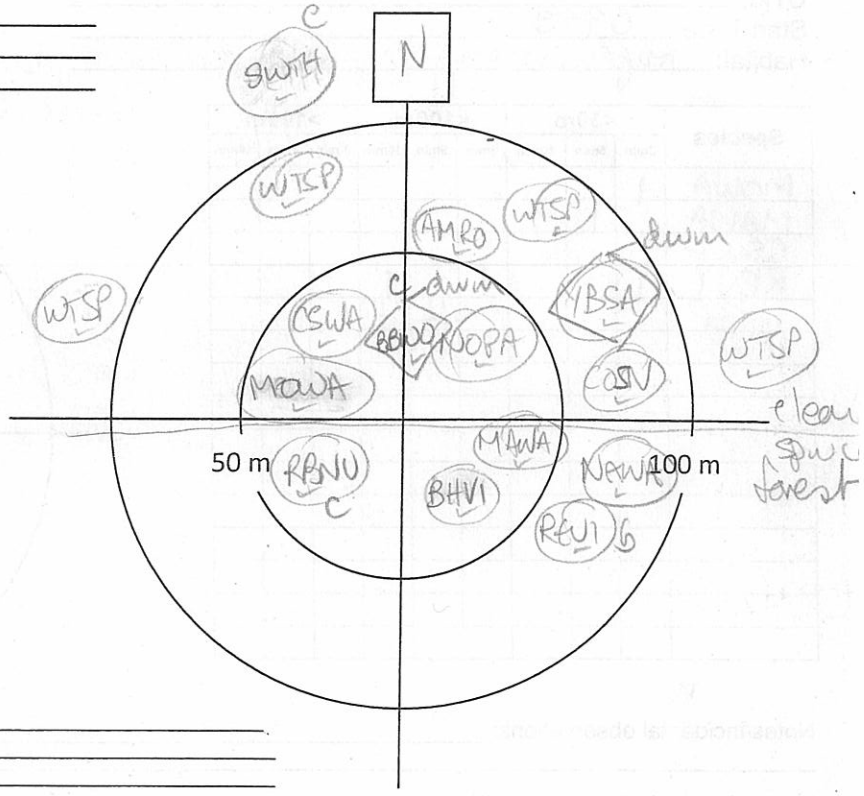

Notes/Incidental observations: _____

Project Number: TC121522
Survey Date: 15 June 13

AMEC Earth & Environmental
160 Traders Blvd East, Mississauga, ON L4Z 3K7
Tel: (905) 568-2929
Cell: (416) 459-6228
Fax: (905) 568-1686

Point Count Name: BB 176
UTM:
Start Time 0920
Habitat: Birch/fir forest

Species	<50m			<100m			>100m		
	3min	5min	10min	3min	5min	10min	3 min	5min	10min
NOPA	1								
GCKI	1								
RBNU	1								
BAWW	1								
CMWA	1								
YBFL	1								
AMRE			1						
SWTH				2	1				
OVEN				1					

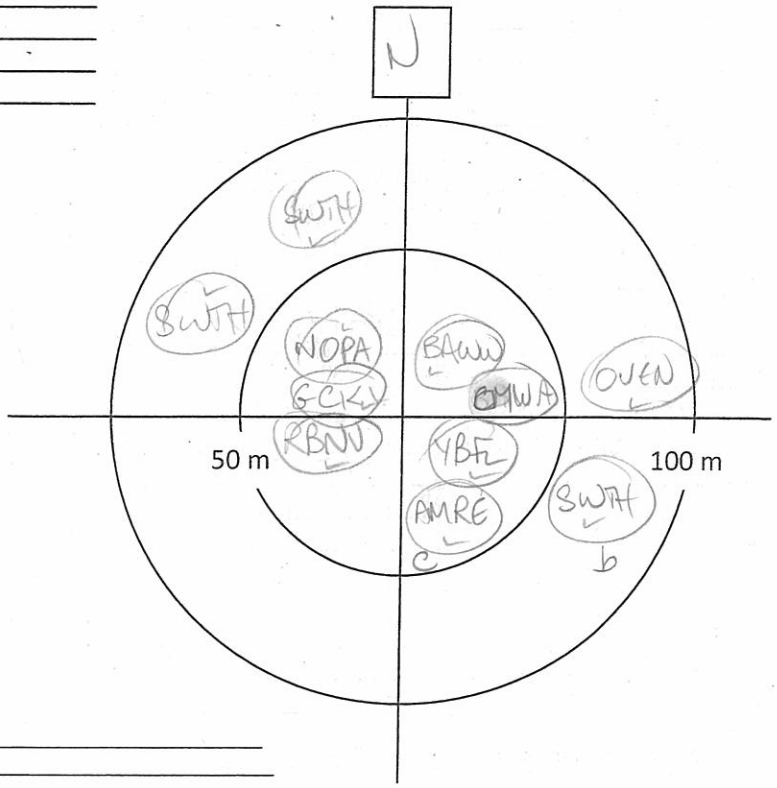

Notes/Incidental observations:

Point Count Name: BB 172
UTM:
Start Time 0943
Habitat: Regenerating poplar thicket, birch spruce (taller)

Species	<50m			<100m			>100m		
	3min	5min	10min	3min	5min	10min	3 min	5min	10min
MOWA	1								
MAWA		1							
CSWA	1								
REVI	1			1		1			
WTSP					2	1			

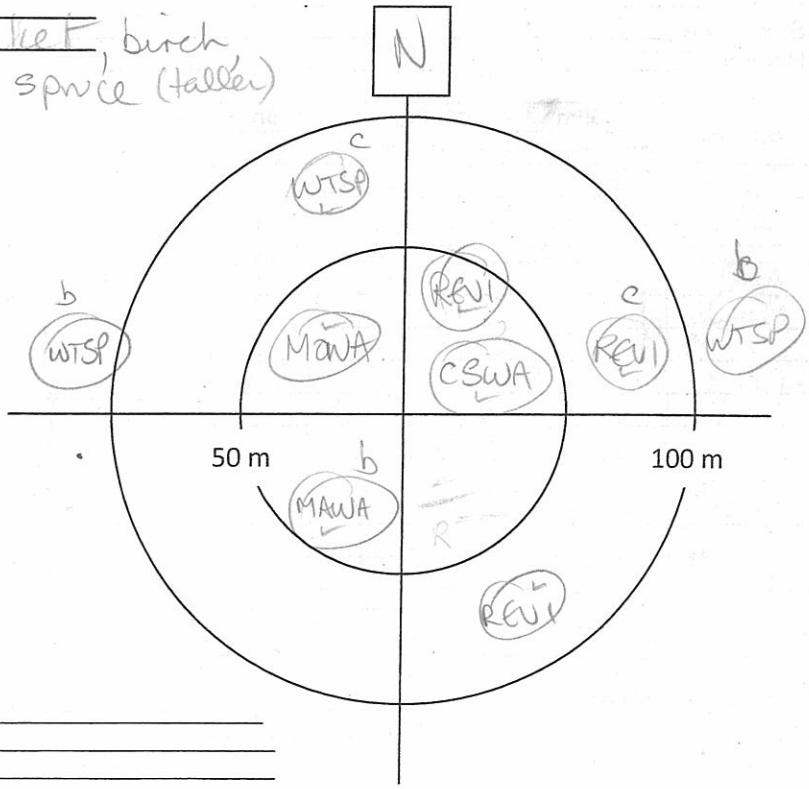

Notes/Incidental observations:

Project Number: TC121522
Survey Date: 15 June 13

AMEC Earth & Environmental
160 Traders Blvd East, Mississauga, ON L4Z 3K7
Tel: (905) 568-2929
Cell: (416) 459-6228
Fax: (905) 568-1686

Point Count Name: BB173
UTM:
Start Time 1002
Habitat: Regenerating-alder, poplar, pin cherry

Species	<50m			<100m			>100m		
	3min	5min	10min	3min	5min	10min	3 min	5min	10min
MAWA	1				1				
BWHA	1								
CSWA	1								
NOPA	1								
REVI	1								
AMCR							1		

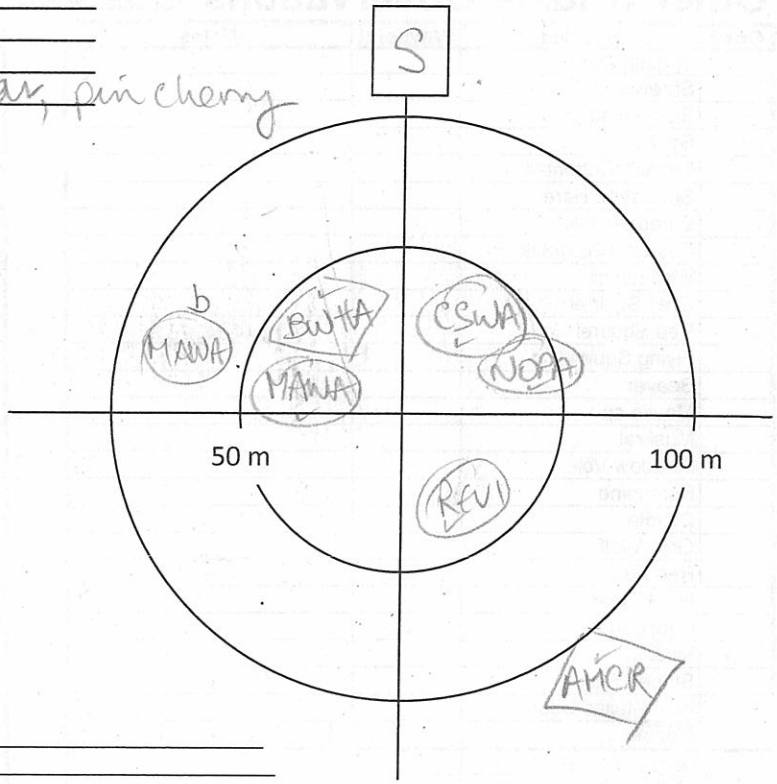

Notes/Incidental observations:

Point Count Name: BB174
UTM:
Start Time 1023
Habitat: cedar + spruce forest - yew underneath, dense birch

Species	<50m			<100m			>100m		
	3min	5min	10min	3min	5min	10min	3 min	5min	10min
NOPA	1								
BTGW	1					1			
BLWA	1								
REVI	1								
GCKI	1								
WIWR					1				
OVEN						1			

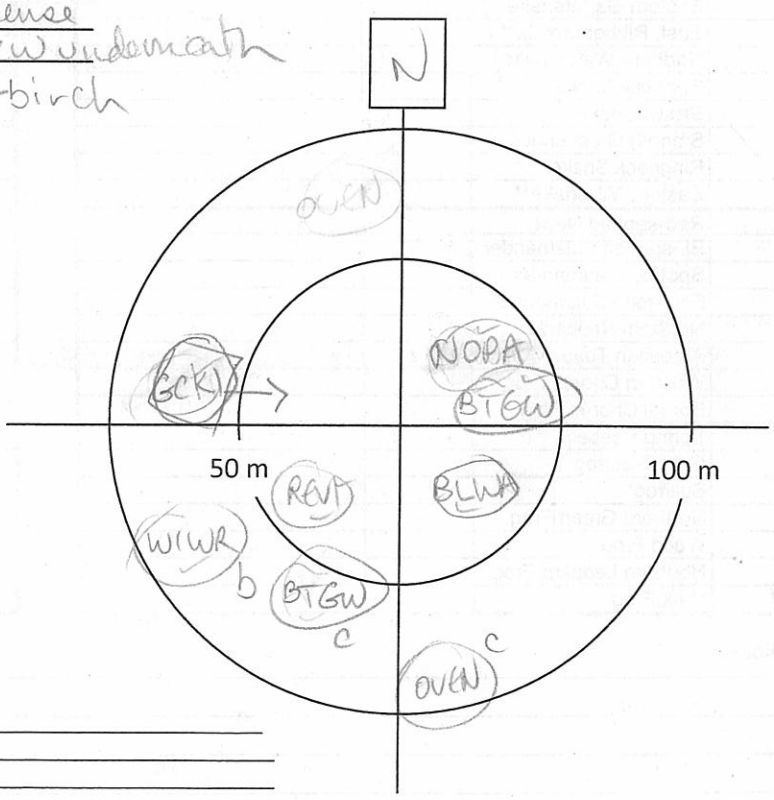

Notes/Incidental observations: Moose scat

Project Number:
Survey Date: 15 June 13

AMEC Earth & Environmental
160 Traders Blvd East, Mississauga, ON L4Z 3K7
Tel: (905) 568-2929
Cell: (416) 459-6228
Fax: (905) 568-1686

Other Wildlife Observations **Species at Risk

Obs?	Species	Waypoint	Notes
	Virginia Opossum		
	Shrew sp		
	Star-nosed Mole		
	Bat Sp.		
	Eastern Cottontail		
	Snowshoe Hare		
	European Hare		
	Eastern Chipmunk		
	Woodchuck		
	Grey Squirrel		
	Red Squirrel		throughout
	Flying Squirrel sp		
	Beaver		
	Mouse sp		
	Muskrat		
	Meadow Vole		
	Porcupine		
	Coyote		
	Grey Wolf		
	Red Fox		
	Black Bear		
	Raccoon		
	Mink		
	Striped Skunk		
	White-tailed Deer		
	Moose		throughout
	Snapping Turtle**		
	Midland Painted Turtle		
	Western Painted Turtle		
	Northern Map Turtle**		
	Blanding's Turtle**		
	Eastern Gartersnake		
	East. Ribbon Snake**		
	Northern Watersnake		
	Redbelly Snake		
	Brown Snake		
	Smooth Greensnake		
	Ringneck Snake		
	Eastern Milksnake**		
	Red-spotted Newt		
	Bl.-spotted Salamander		
	Spotted Salamander		
	Four-toed Salamander		
	Northern Redback		
	American Toad		larvae in streams in clearcut
	Western Chorus Frog**		
	Boreal Chorus Frog		
	Spring Peeper		
	Gray Treefrog		
	Bullfrog*		
	Northern Green Frog		
	Wood Frog		
	Northern Leopard Frog		
	Mink Frog		

Other Species	Waypoint	Notes

AMEC Earth & Environmental
160 Traders Blvd East, Mississauga, ON L4Z 3K7
Tel: (905) 568-2929
Cell: (416) 459-6228
Fax: (905) 568-1686

Breeding Bird Point Count Survey

Project Name: IMG		Project Number: TC121527	
Crew Leader: JEFF BRANDON	Observers: J. BRANDON		
Date: JUNE 16/2013	Start Time (24hr): 5:22 am	End Time (24hr): 09:30	
Weather: CLEAR @ 7:30 OVERCAST (20%) CC	Temperature: ~10-15°C (SEE EC)	Wind: 1-2	Precipitation (Circle): (0) None 1 Haze/Fog 2 Drizzle 3 Rain

Point Count Name: NEW POINT FROM JON
UTM: 147
Start Time 5:22-5:32 am
Habitat:

Species	<50m			<100m			>100m		
	3m in	5m in	10m in	3m in	5m in	10m in	3m in	5m in	10m in
REVI				II					
BTBW	I			I		I			
OVEN	I			I	I				
VEER				I					
NOPA	I								
BCCH	I								

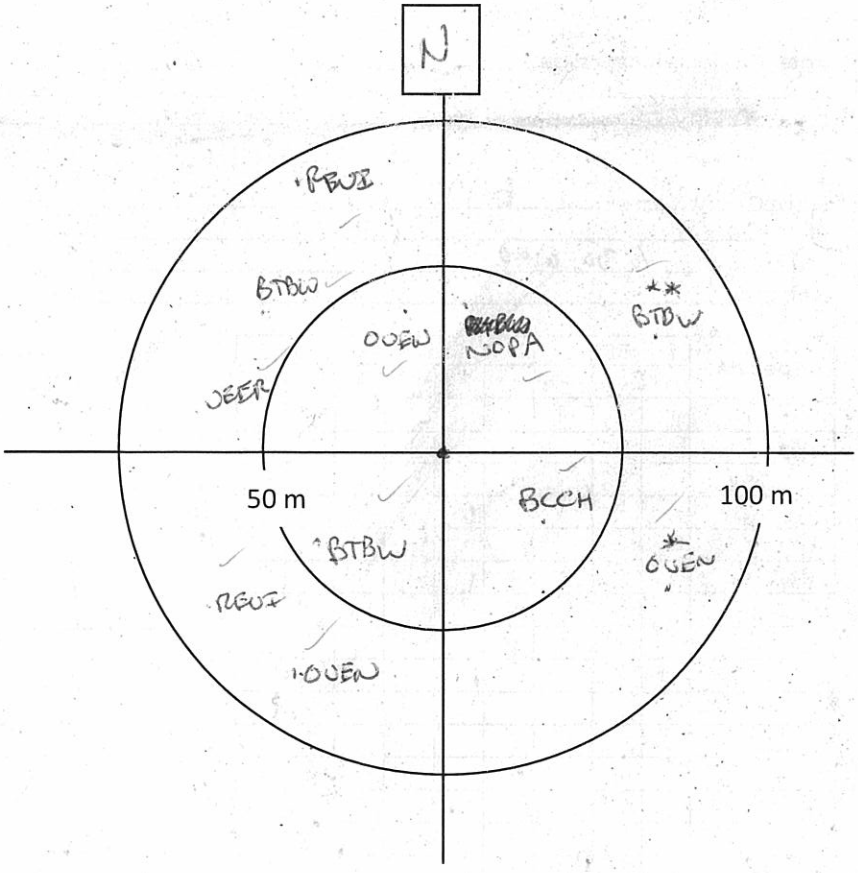

Notes/Incidental observations: LOTS OF MOSQUITOS

Project Number: TC121522
Survey Date: JUNE 15/2013

AMEC Earth & Environmental
160 Traders Blvd East, Mississauga, ON L4Z 3K7
Tel: (905) 568-2929
Cell: (416) 459-6228
Fax: (905) 568-1686

Point Count Name: B48
UTM:
Start Time 5:49-5:59
Habitat:

Species	<50m			<100m			>100m		
	3min	5min	10min	3min	5min	10min	3min	5min	10min
PAWA	1			1					
ALFL	1								
COYE				11					
WTSP				1					
DEJU					1	1			
YRWA				1			1		
WIWR				1			1		
RCKI					1				

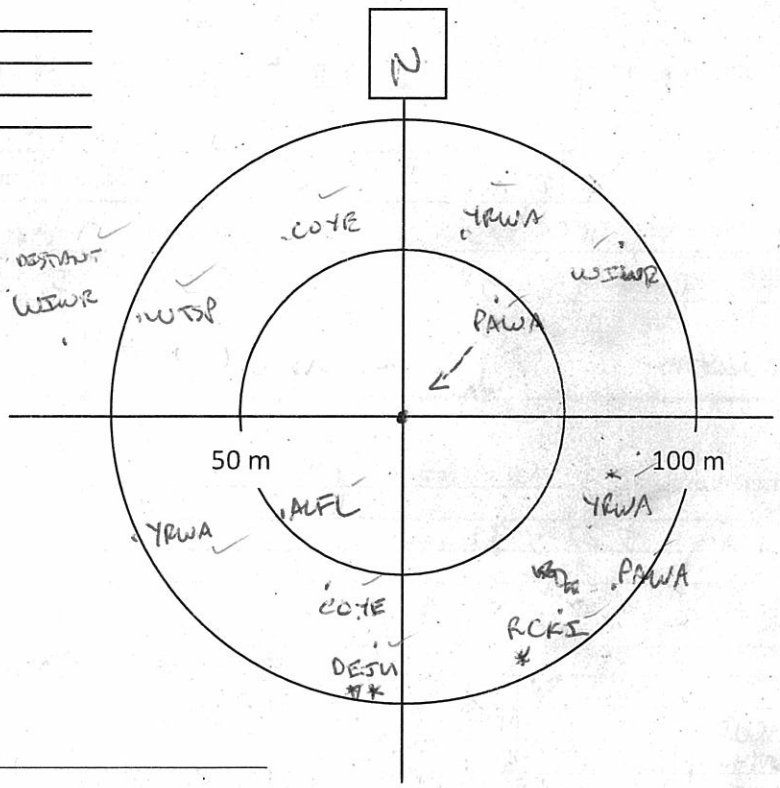

Notes/Incidental observations:

Point Count Name: B49
UTM:
Start Time 6:30 6:40
Habitat:

Species	<50m			<100m			>100m		
	3min	5min	10min	3min	5min	10min	3min	5min	10min
YRWA	11								
GCKI	1								
NAWA	1			1					
OVEN					1		1		
WTSP							1		
RBNU					1				
SWTH						1			
WIWR				1					

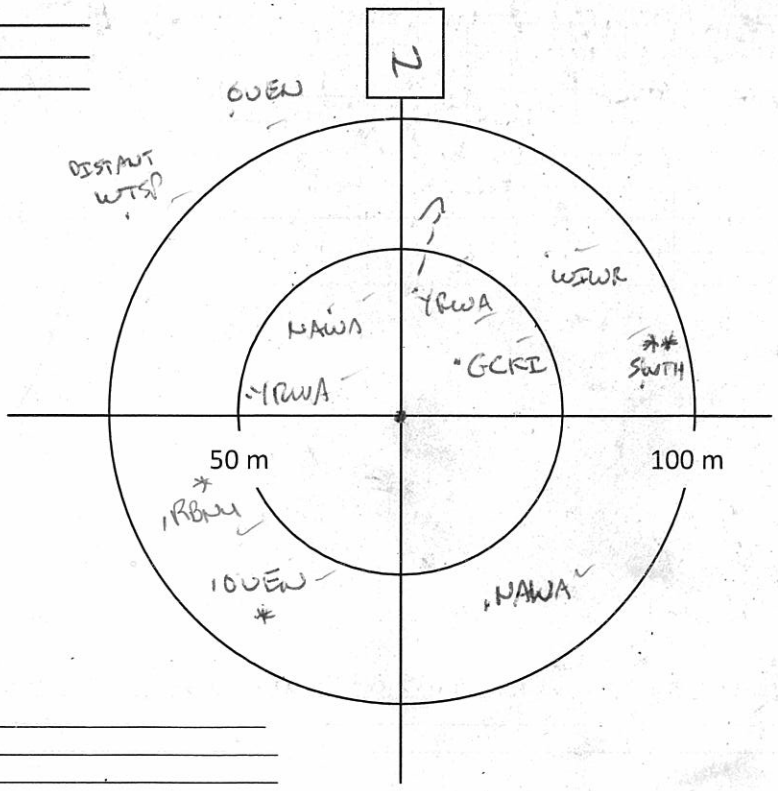

Notes/Incidental observations:

AMEC Earth & Environmental
160 Traders Blvd East, Mississauga, ON L4Z 3K7
Tel: (905) 568-2929
Cell: (416) 459-6228
Fax: (905) 568-1686

Project Number: TC121522
Survey Date: JUNE 16/2013

Point Count Name: B52
UTM:
Start Time 6:49 - 6:59
Habitat:

Species	<50m			<100m			>100m		
	3min	5min	10min	3min	5min	10min	3min	5min	10min
WTSP				III					
HETH				I					
NAWA	I			I					
NAWA	I				I				
YBFL				I					
WBWR				II					
YRWA	I								
OVEN						I			

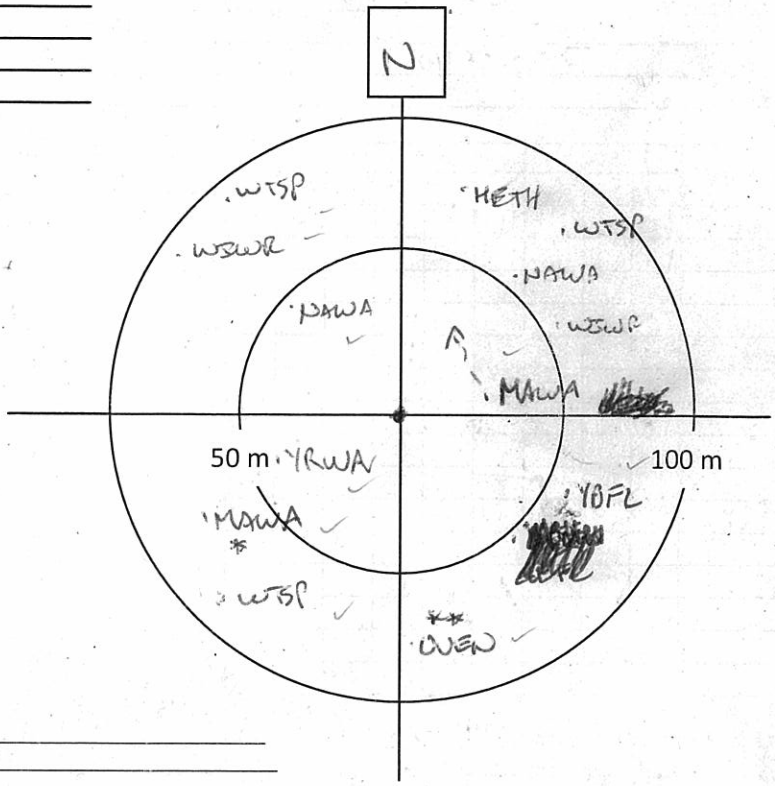

Notes/Incidental observations:

Point Count Name: B57
UTM:
Start Time 7:09 - 7:19
Habitat:

Species	<50m			<100m			>100m		
	3min	5min	10min	3min	5min	10min	3min	5min	10min
NAWA	I				I				
YRWA	II								
RBNU						I			
OVEN				I		I			
RCKI				I					

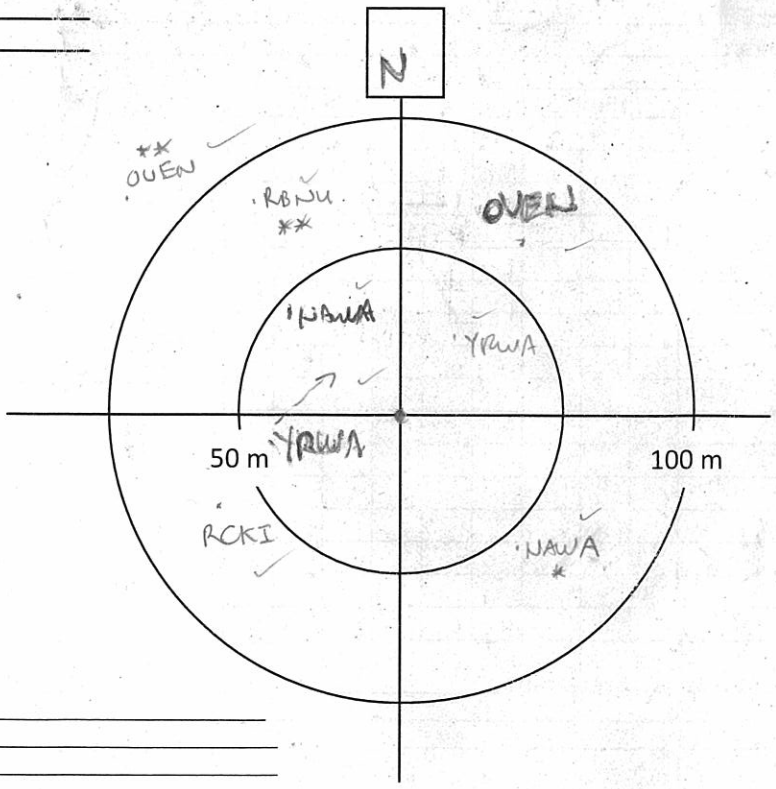

Notes/Incidental observations: QUIET

AMEC Earth & Environmental
160 Traders Blvd East, Mississauga, ON L4Z 3K7
Tel: (905) 568-2929
Cell: (416) 459-6228
Fax: (905) 568-1686

Project Number: TC121522
Survey Date: JUNE 16/2013

PointCountName: B56
UTM:
StartTime 7:30-7:40
Habitat:

Species	<50m			<100m			>100m		
	3min	5min	10min	3min	5min	10min	3min	5min	10min
BTBW	1			11					
REVI	1			1					
OVEN	1			11					
NAWA						1			
VEER						1			
RBNU				1					

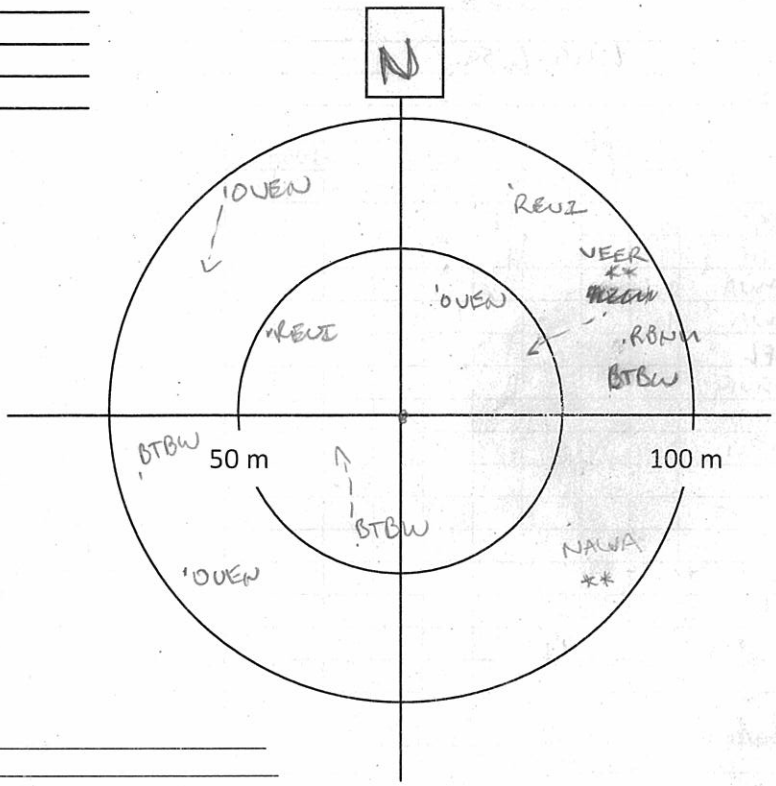

Notes/Incidentalobservations: CLEAR SKIES NOW

PointCountName: B55
UTM:
StartTime 7:53-8:03
Habitat:

Species	<50m			<100m			>100m		
	3min	5min	10min	3min	5min	10min	3min	5min	10min
OVEN				111	1				
REVI				1	1				
BTBW	1		1						
BCCH				1					
WTSP				1			1		
COLO							1		

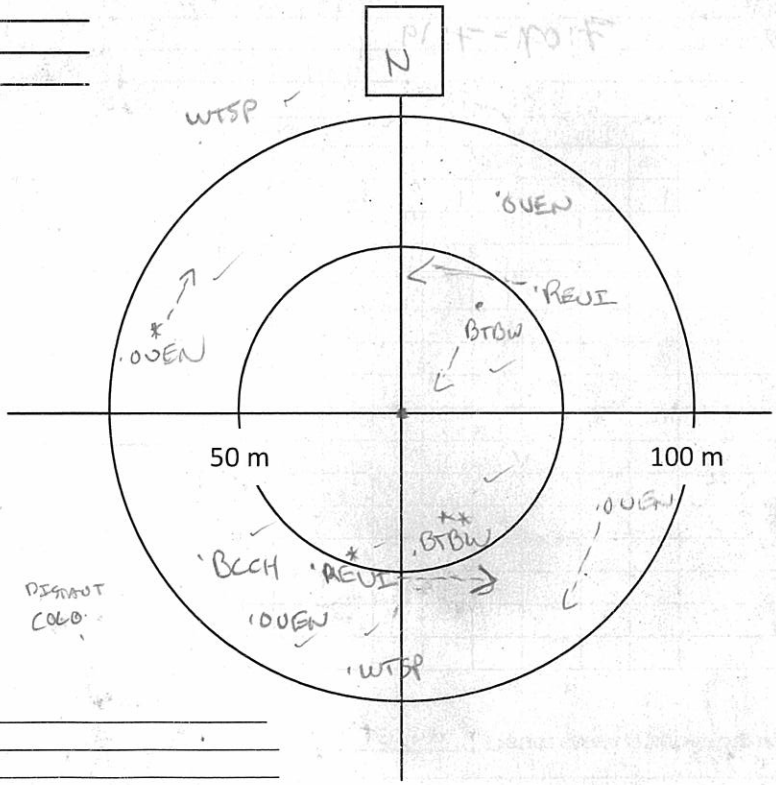

Notes/Incidentalobservations:

Project Number: TC121522
Survey Date: JUNE 16/2013

AMEC Earth & Environmental
160 Traders Blvd East, Mississauga, ON L4Z 3K7
Tel: (905) 568-2929
Cell: (416) 459-6228
Fax: (905) 568-1686

PointCountName: B58
UTM: _____
StartTime 8:13-8:23
Habitat: _____

Species	<50m			<100m			>100m		
	3min	5min	10min	3min	5min	10min	3min	5min	10min
BTBW		1		1					
WIWR	1								
OVEN				11			1		
YRWA		1		1					
MAWA	1			1					
~~YRWA~~									
~~MAWA~~									
BTGN				1					
~~BLBW~~		1							
RBNU						1			
PUFI				1					

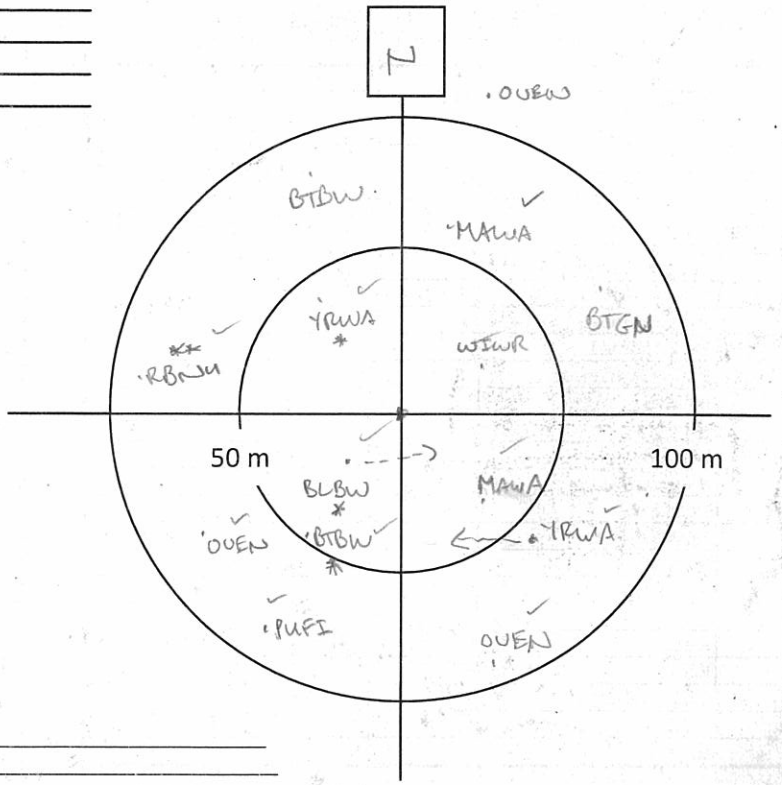

Notes/Incidental observations: _____

PointCountName: _____
UTM: _____
StartTime _____
Habitat: _____

Species	<50m			<100m			>100m		
	3min	5min	10min	3min	5min	10min	3min	5min	10min

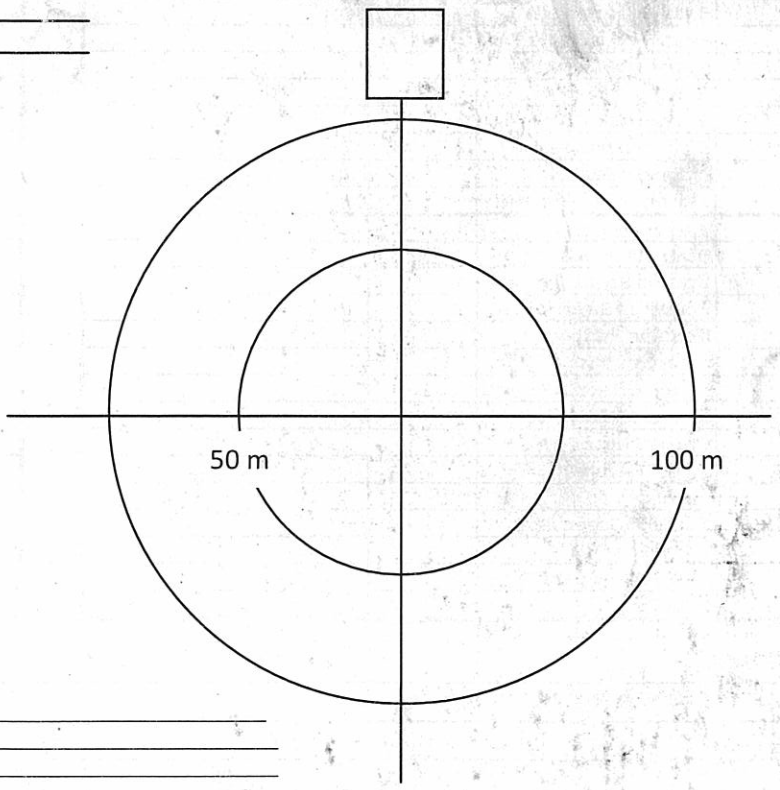

Notes/Incidental observations: _____

AMEC Earth & Environmental
160 Traders Blvd East, Mississauga, ON L4Z 3K7
Tel: (905) 568-2929
Cell: (416) 459-6228
Fax: (905) 568-1686

Breeding Bird Point Count Survey

Project Name: IAMGold		**Project Number:** TC121522	
Crew Leader: Jeff Baldon	**Observers:** Sarah Mainguy		
Date: 16 June 13	**Start Time (24hr):** 05:15	**End Time (24hr):** 08:45	
Weather: heavy cloud	**Temperature:** 12°C	**Wind:** 1-2	**Precipitation (Circle):** (0) None 1 Haze/Fog 2 Drizzle 3 Rain

Point Count Name: BB44
UTM:
Start Time 0529
Habitat: mixed forest (birch + spruce) / wetland

Species	<50m			<100m			>100m		
	3min	5min	10min	3min	5min	10min	3 min	5min	10min
NAWA				II					
VEER						I			
SWTH				I					
REVI	I			II					
NOPA			I						
RBNU	I								
WTSP									II
WIWR				I					I

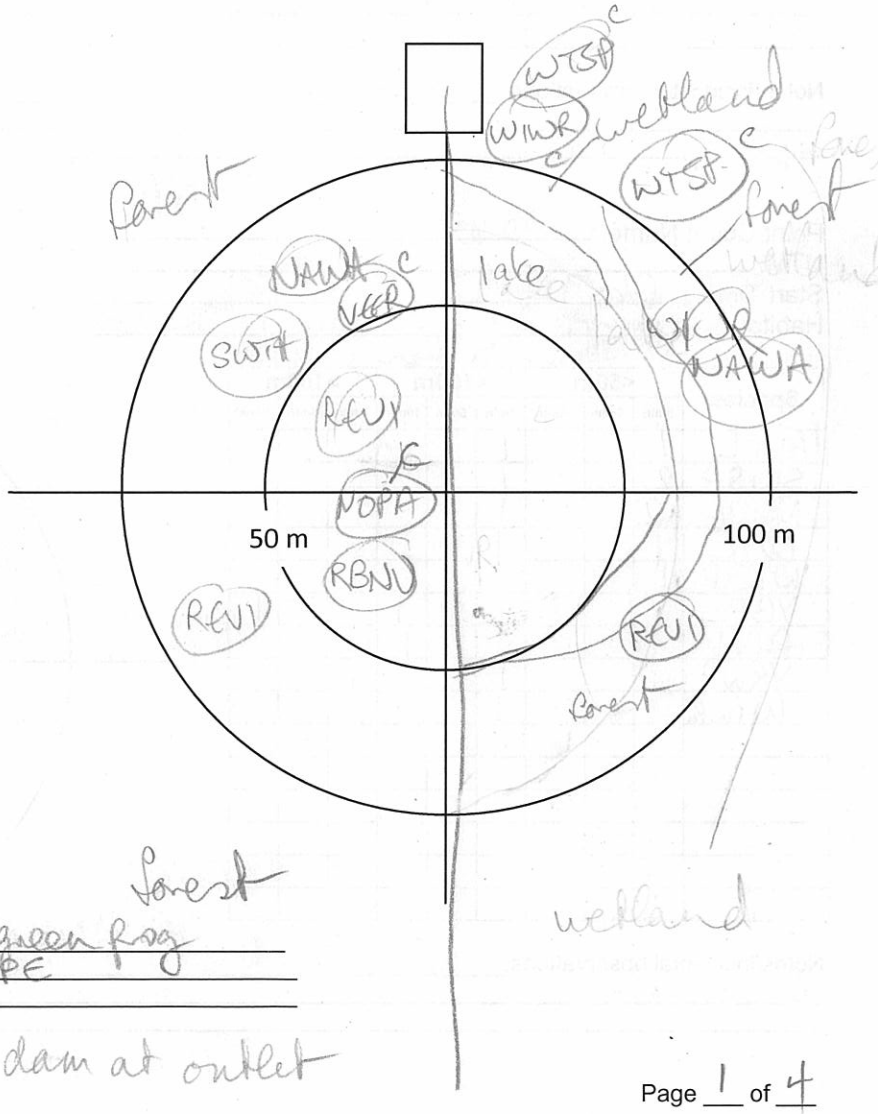

Notes/Incidental observations: Mink frog + green frog calling from lake + 0 SPPE

I am standing on beaver dam at outlet

Project Number: ~~YBBS~~ TC 121522
Survey Date: JUNE 16, 2013

AMEC Earth & Environmental
160 Traders Blvd East, Mississauga, ON L4Z 3K7
Tel: (905) 568-2929
Cell: (416) 459-6228
Fax: (905) 568-1686

Point Count Name: BB 46
UTM:
Start Time 0555
Habitat: Mixed forest - jackpine, poplar, birch, spruce, understory: fir, bir

Species	<50m			<100m			>100m		
	3min	5min	10min	3min	5min	10min	3 min	5min	10min
OVEN	1			2			1		
REVI	1								
MAWA	2								
BCCH			1						
MAWA				1					
SWTH				1					
WTSP				1					1
BLJA				1					
WIWR									1

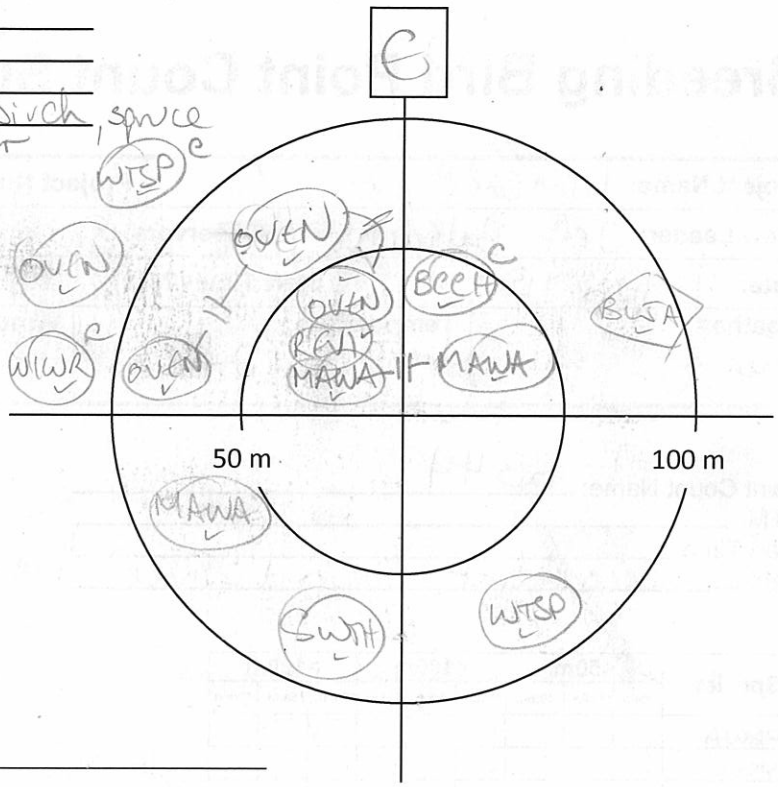

Notes/Incidental observations: very humid

Point Count Name: BB 47
UTM:
Start Time 0619
Habitat: wet treed fen - tamarack dom. Betula pumila under

Species	<50m			<100m			>100m		
	3min	5min	10min	3min	5min	10min	3 min	5min	10min
ALFL	1			1					
SWSP	2			1					
NAWA	2			1					
COYE	1			1					
WTSP	1						1		
YBFL						1			1
PHVI						1			
YRWA				1			1		
WIWR				1					

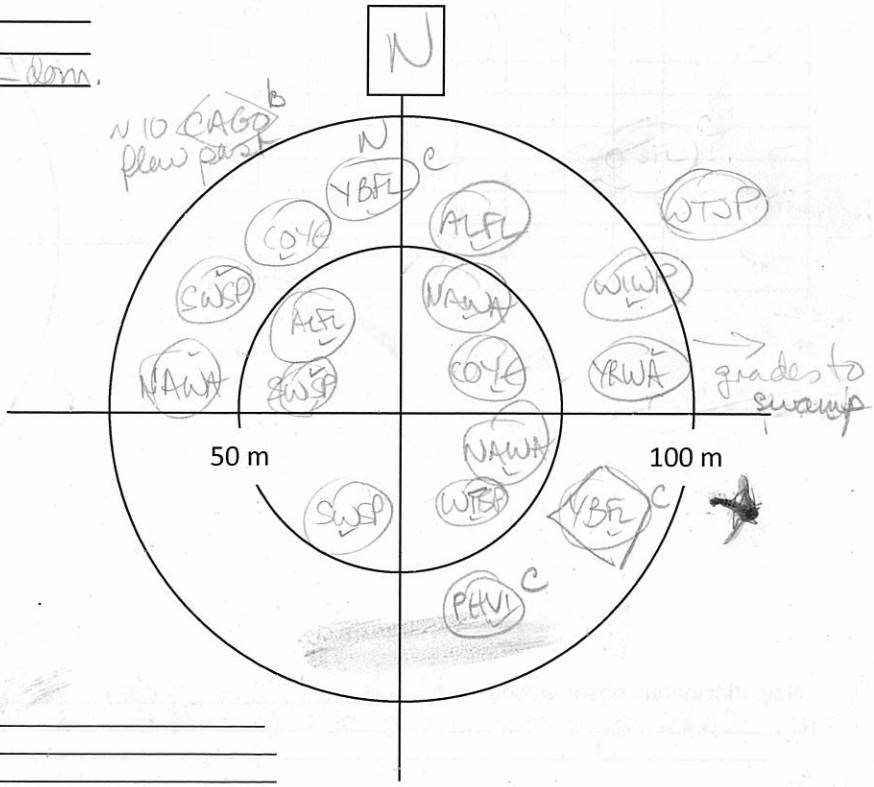

Notes/Incidental observations: wind still 0
SPPE to N (VO)

Project Number: TC121522
Survey Date: 16 June 13

AMEC Earth & Environmental
160 Traders Blvd East, Mississauga, ON L4Z 3K7
Tel: (905) 568-2929
Cell: (416) 459-6228
Fax: (905) 568-1686

Point Count Name: BB 48
UTM:
Start Time 0650
Habitat: alder/SpNCe swamp

Species	<50m			<100m			>100m		
	3min	5min	10min	3min	5min	10min	3 min	5min	10min
WTSP	1	1							
MAWA	1								
BLJA	1								
SWSP	1								
NAWA	1			2					
REVI	2			2					
RCKI				1					
WIWR				1					
YBFL				1					
OVEN				1					
COLO							1		

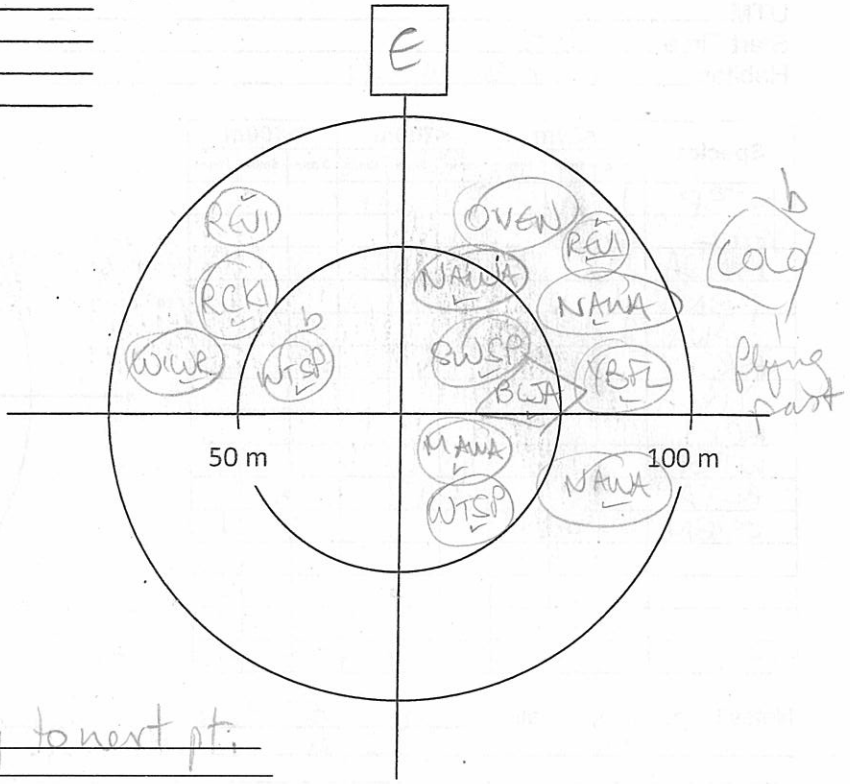

Notes/Incidental observations: WOFR on way to next pt. at 460950E 5333015N

Point Count Name: BB 51
UTM:
Start Time 0613
Habitat: SpNCe/Poplar Forest

Species	<50m			<100m			>100m		
	3min	5min	10min	3min	5min	10min	3 min	5min	10min
REVI	2								
NAWA	1			1					
OVEN				1		1			

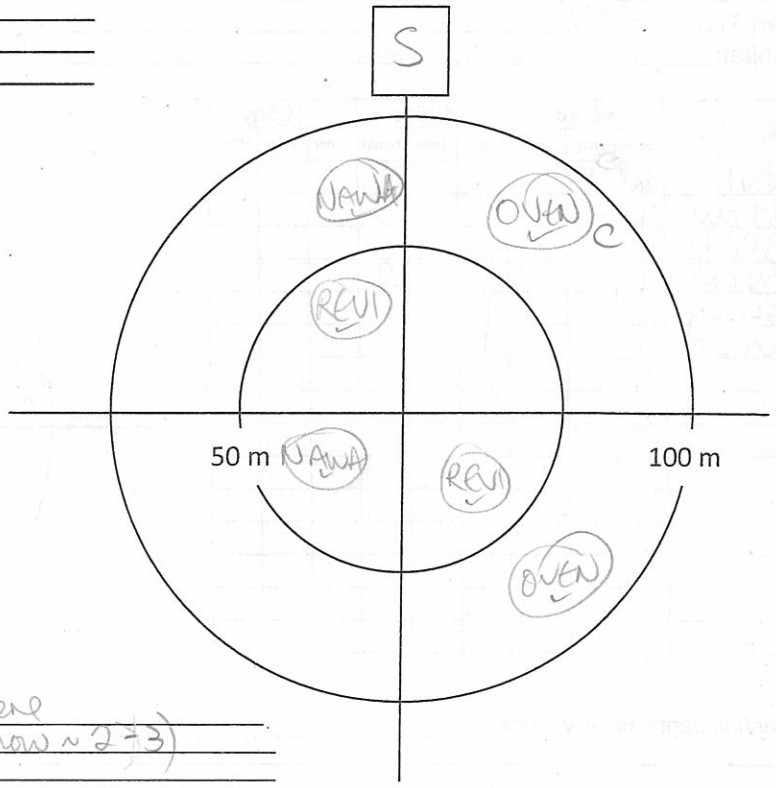

Notes/Incidental observations: Bugs ferocious here sky clearing + wind picking up (now ~ 2-3)

Project Number: TC121522
Survey Date: JUNE 16, 2013

AMEC Earth & Environmental
160 Traders Blvd East, Mississauga, ON L4Z 3K7
Tel: (905) 568-2929
Cell: (416) 459-6228
Fax: (905) 568-1686

Point Count Name: BB 50
UTM: _____
Start Time 0743
Habitat: cedar swamp

Species	<50m			<100m			>100m		
	3min	5min	10min	3min	5min	10min	3 min	5min	10min
WTSP	1								
YBFL	2			1					
MAWA			1						
RBNU	1								
NAWA	2			2					
BRCR		1							
YRWA			1						
RCKI				1		1			
WTSP				1					
BLJA					1				
OVEN									1

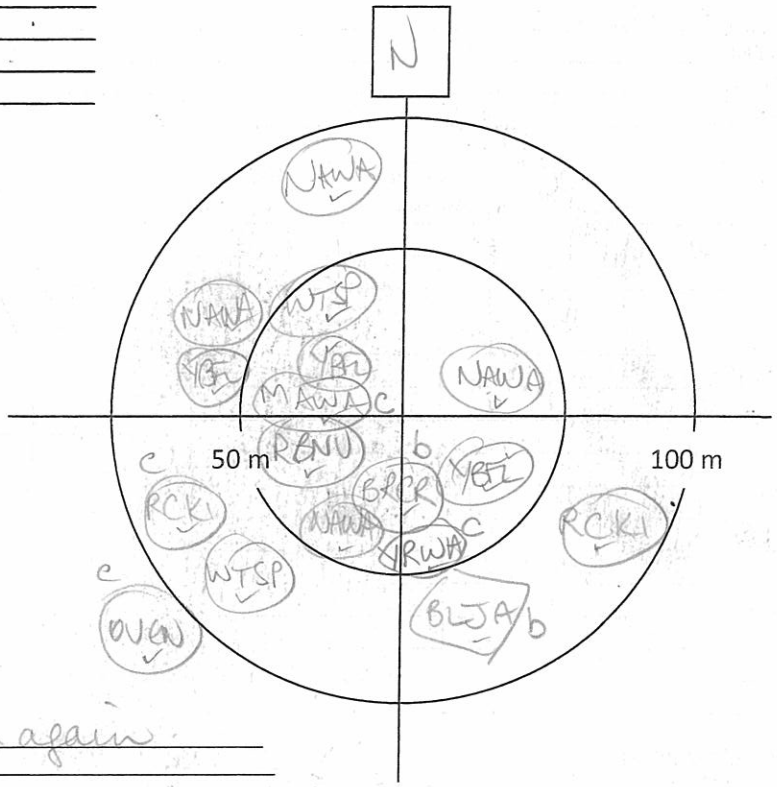

Notes/Incidental observations: wind died down again - now sunny had sqw

Point Count Name: BB 54
UTM: _____
Start Time 0813
Habitat: Decid forest - poplar + birch + fir in sub-canopy +ACESPIC

Species	<50m			<100m			>100m		
	3min	5min	10min	3min	5min	10min	3 min	5min	10min
REVI	2	1							
BTBW	1								
BCCH	1								
OVEN	1					2			
BLWA				1					
WTSP				1					

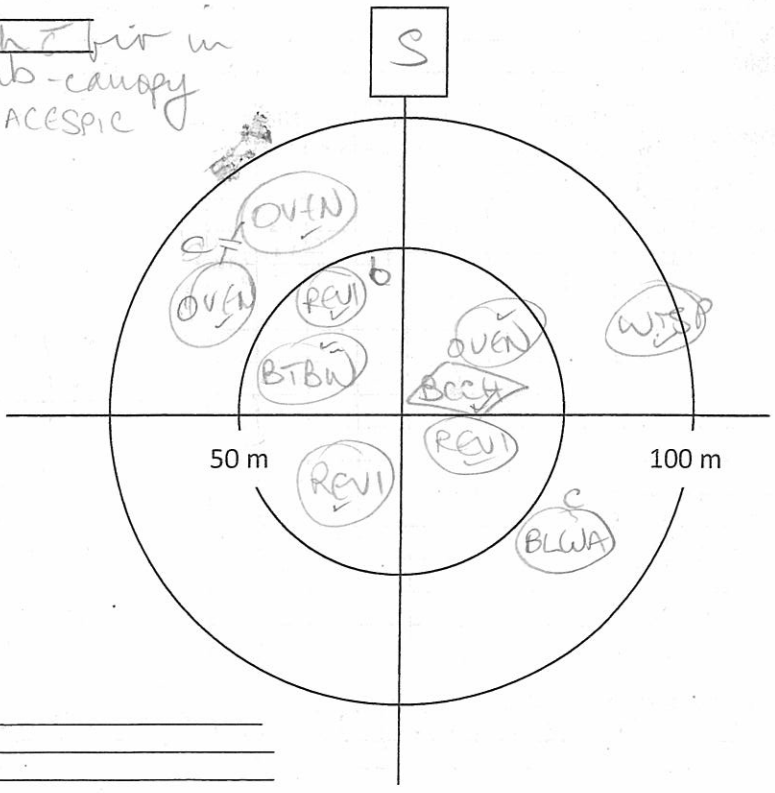

Notes/Incidental observations: _____

AMEC Earth & Environmental
160 Traders Blvd East, Mississauga, ON L4Z 3K7
Tel: (905) 568-2929
Cell: (416) 459-6228
Fax: (905) 568-1686

Crepuscular Breeding Bird Survey

Project Name: IAMGOLD		**Project Number:** TC121522	
Observers: Jon Plaizier & Joel Jamieson			
Date: May 24, 2013	**Start Time (24hr):** 21:15	**End Time (24hr):** 23:57	**Survey Round:** 1
Weather: 100% cloud cover	**Temperature:** 17°C	**Wind:**	**Precipitation** (Circle): 0 None 1 Trace 2 Rain 3 Before **Count**
Moon Observed?	**Lunar Phase :** New • 1st Qtr • Full • 3rd Qtr		

Point Count Name: CB128
Waypoint/Unit Number:
UTM:
Start Time (24 hr) 21:15
Habitat: Regen. clearcut - spruce

ID	Species	Repeat?	0-3 min	4-5 min	Distance (circle)	Direction
No birds					~~<100, >100, >200 m~~	
					<100, >100, >200 m	
					<100, >100, >200 m	
					<100, >100, >200 m	
					<100, >100, >200 m	
					<100, >100, >200 m	
					<100, >100, >200 m	
					<100, >100, >200 m	

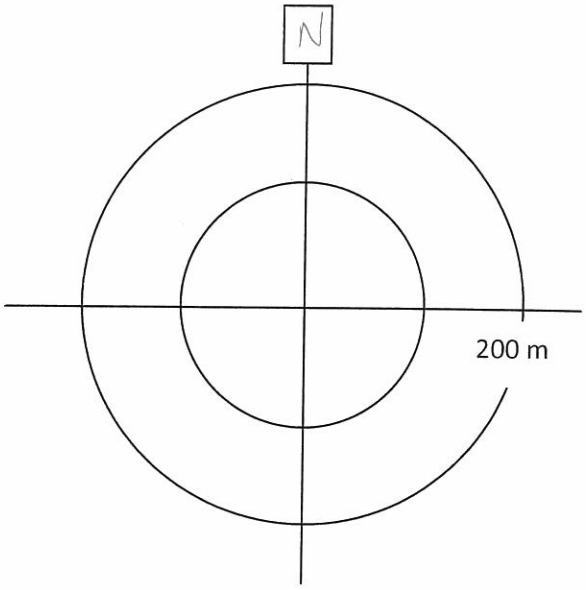

SPPE in small depression to the north.
↳ level 3.

Point Count Name: CB127
Waypoint/Unit Number:
UTM:
Start Time (24 hr) 0 21:23
Habitat:

ID	Species	Repeat?	0-3 min	4-5 min	Distance (circle)	Direction
					<100, >100, >200 m	
					<100, >100, >200 m	
					<100, >100, >200 m	
					<100, >100, >200 m	
					<100, >100, >200 m	
					<100, >100, >200 m	
					<100, >100, >200 m	
					<100, >100, >200 m	

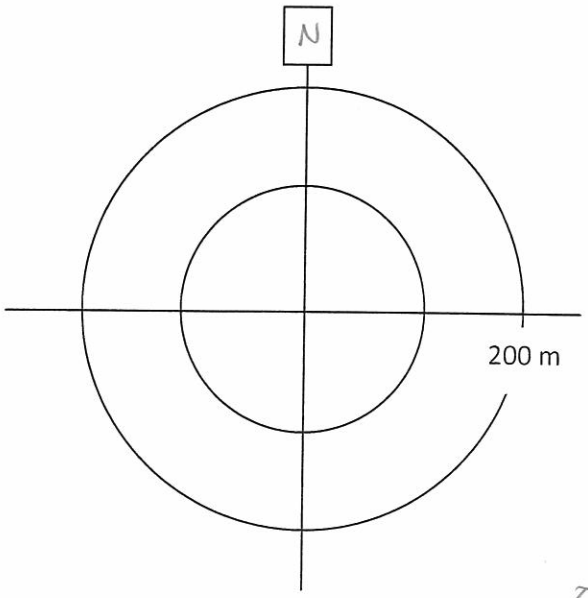

SPPE - L3 - in all wet depressions of clearcut.

Project Number:
Survey Date:

AMEC Earth & Environmental
160 Traders Blvd East, Mississauga, ON L4Z 3K7
Tel: (905) 568-2929
Cell: (416) 459-6228
Fax: (905) 568-1686

Point Count Name: 001
Waypoint/Unit Number: 001 E414
UTM: 17T 468913 5266148
Start Time (24 hr) 21:32
Habitat:

No EWPW

ID	Species	Repeat?	0-3 min	4-5 min	Distance (circle)	Direction
					<100, >100, >200 m	
					<100, >100, >200 m	
					<100, >100, >200 m	
					<100, >100, >200 m	
					<100, >100, >200 m	
					<100, >100, >200 m	
					<100, >100, >200 m	
					<100, >100, >200 m	

- AMWO
- WISN

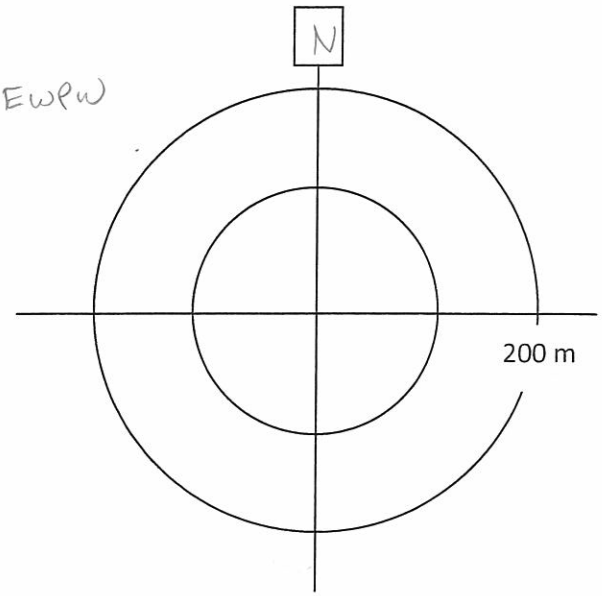

Point Count Name: CB129
Waypoint/Unit Number:
UTM:
Start Time (24 hr) 21:45
Habitat:

ID	Species	Repeat?	0-3 min	4-5 min	Distance (circle)	Direction
					<100, >100, >200 m	
					<100, >100, >200 m	
					<100, >100, >200 m	
					<100, >100, >200 m	
					<100, >100, >200 m	
					<100, >100, >200 m	
					<100, >100, >200 m	
					<100, >100, >200 m	

- AMWO
- NSWO

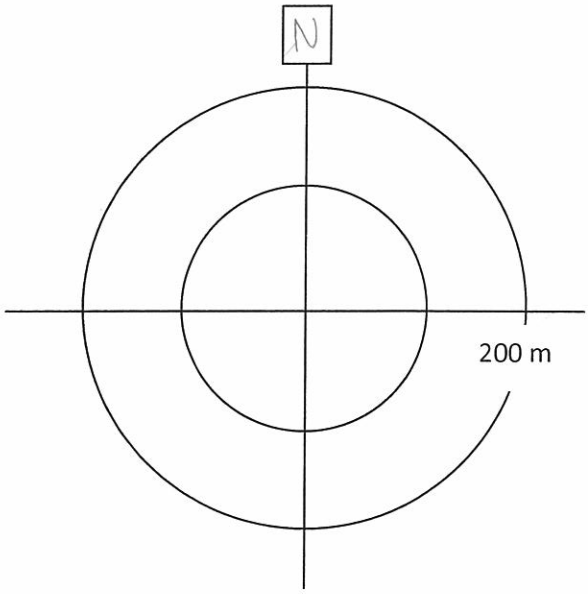

Point Count Name: 002
Waypoint/Unit Number: 002 E414
UTM:
Start Time (24 hr) 22:01
Habitat:

ID	Species	Repeat?	0-3 min	4-5 min	Distance (circle)	Direction
					<100, >100, >200 m	
					<100, >100, >200 m	
					<100, >100, >200 m	
					<100, >100, >200 m	
					<100, >100, >200 m	
					<100, >100, >200 m	
					<100, >100, >200 m	
					<100, >100, >200 m	

- WISN
- SPPE in ditches (level 3)
- AMTO (level 1)

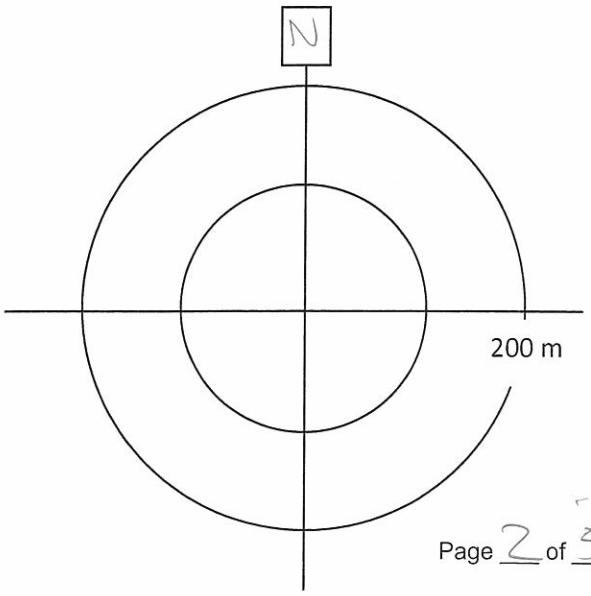

Project Number: TC111504
Survey Date:

AMEC Earth & Environmental
160 Traders Blvd East, Mississauga, ON L4Z 3K7
Tel: (905) 568-2929
Cell: (416) 459-6228
Fax: (905) 568-1686

Point Count Name: CB120
Waypoint/Unit Number:
UTM:
Start Time (24 hr) 22:15
Habitat:

No EWP

ID	Species	Repeat?	0-3 min	4-5 min	Distance (circle)	Direction
					<100, >100, >200 m	
					<100, >100, >200 m	
					<100, >100, >200 m	
					<100, >100, >200 m	
					<100, >100, >200 m	
					<100, >100, >200 m	
					<100, >100, >200 m	
					<100, >100, >200 m	

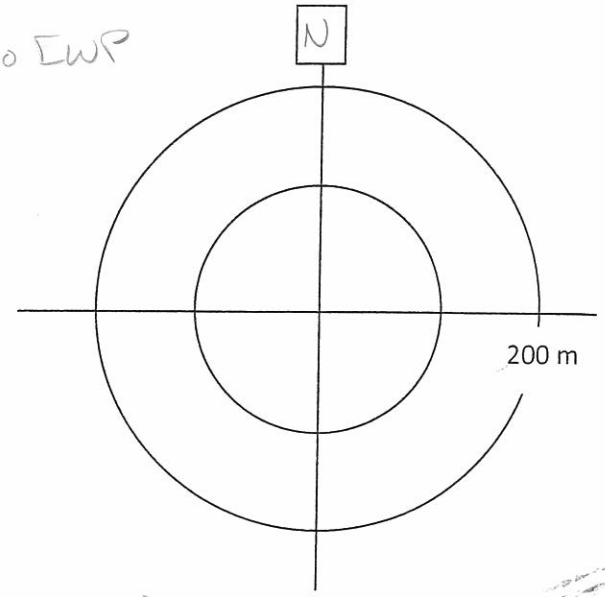

- AMTO (level 3)
- SPPE (level 3)
- Heard beavers often
- observed copulations of AMTO + SPPE

Point Count Name: 003
Waypoint/Unit Number: 003 E414
UTM: 17T 0467506 5271541
Start Time (24 hr) 22:24
Habitat:

No EWPW

ID	Species	Repeat?	0-3 min	4-5 min	Distance (circle)	Direction
					<100, >100, >200 m	
					<100, >100, >200 m	
					<100, >100, >200 m	
					<100, >100, >200 m	
					<100, >100, >200 m	
					<100, >100, >200 m	
					<100, >100, >200 m	
					<100, >100, >200 m	

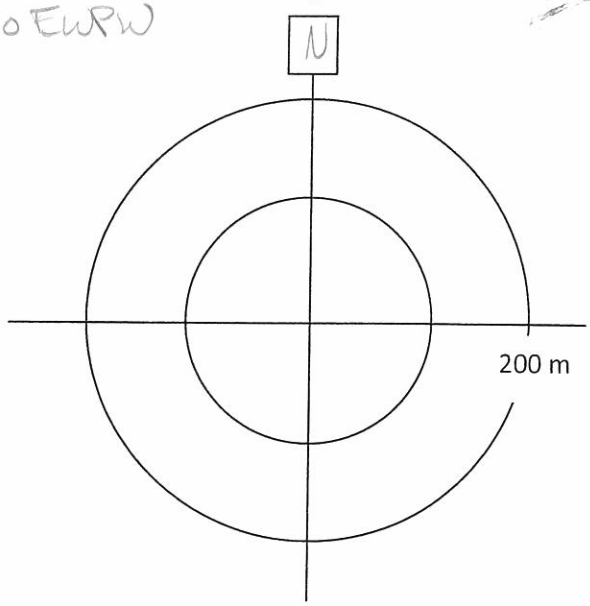

- AMTO (level 2)
- SPPE (level 2)

Point Count Name: CB116B
Waypoint/Unit Number: ~~CB116B~~ E414 waypoint 004
UTM: 17T 466493 5270281
Start Time (24 hr) 22:53
Habitat:

ID	Species	Repeat?	0-3 min	4-5 min	Distance (circle)	Direction
					<100, >100, >200 m	
					<100, >100, >200 m	
					<100, >100, >200 m	
					<100, >100, >200 m	
					<100, >100, >200 m	
					<100, >100, >200 m	
					<100, >100, >200 m	
					<100, >100, >200 m	

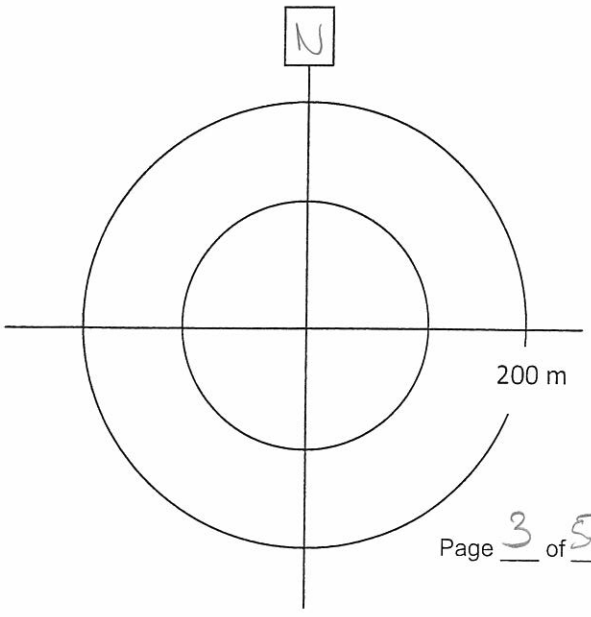

- quiet
- SPPE 200m away and AMTO

Project Number: TC111504
Survey Date:

AMEC Earth & Environmental
160 Traders Blvd East, Mississauga, ON L4Z 3K7
Tel: (905) 568-2929
Cell: (416) 459-6228
Fax: (905) 568-1686

Point Count Name: CB119
Waypoint/Unit Number: _____ NO EWPW
UTM: _____
Start Time (24 hr) 23:11
Habitat: _____

ID	Species	Repeat?	0-3 min	4-5 min	Distance (circle)	Direction
					<100, >100, >200 m	
					<100, >100, >200 m	
					<100, >100, >200 m	
					<100, >100, >200 m	
					<100, >100, >200 m	
					<100, >100, >200 m	
					<100, >100, >200 m	
					<100, >100, >200 m	

SPPE } at 150m
AMTO }

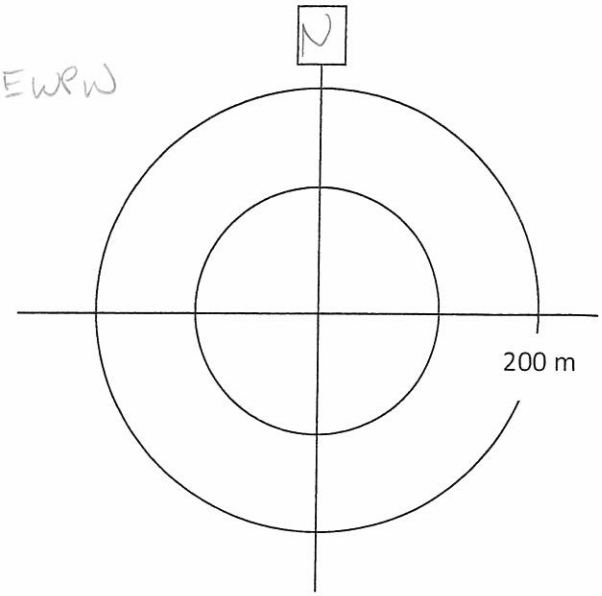

Point Count Name: CB118
Waypoint/Unit Number: _____ NO EWPW
UTM: _____
Start Time (24 hr) 23:20
Habitat: _____

ID	Species	Repeat?	0-3 min	4-5 min	Distance (circle)	Direction
					<100, >100, >200 m	
					<100, >100, >200 m	
					<100, >100, >200 m	
					<100, >100, >200 m	
					<100, >100, >200 m	
					<100, >100, >200 m	
					<100, >100, >200 m	
					<100, >100, >200 m	

SPPE (level 2) }
AMTO (level 2) }

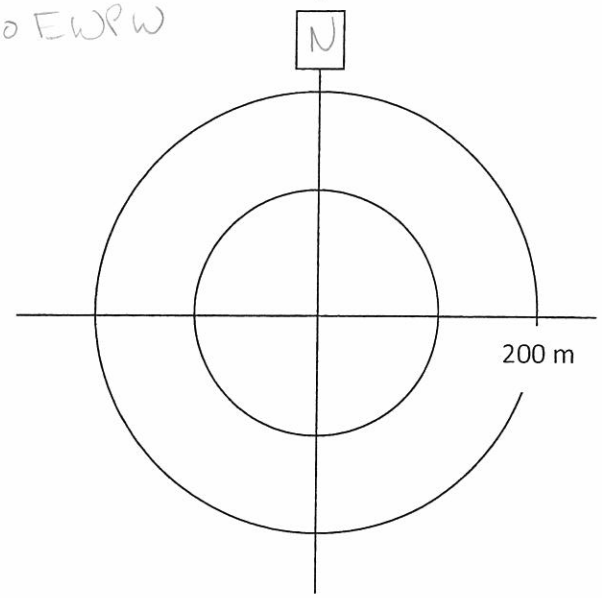

Point Count Name: CB117
Waypoint/Unit Number: _____ NO EWPW
UTM: _____
Start Time (24 hr) 23:27
Habitat: _____

ID	Species	Repeat?	0-3 min	4-5 min	Distance (circle)	Direction
					<100, >100, >200 m	
					<100, >100, >200 m	
					<100, >100, >200 m	
					<100, >100, >200 m	
					<100, >100, >200 m	
					<100, >100, >200 m	
					<100, >100, >200 m	
					<100, >100, >200 m	

SPPE (level 3) } 50-100m
AMTO (level 2) }

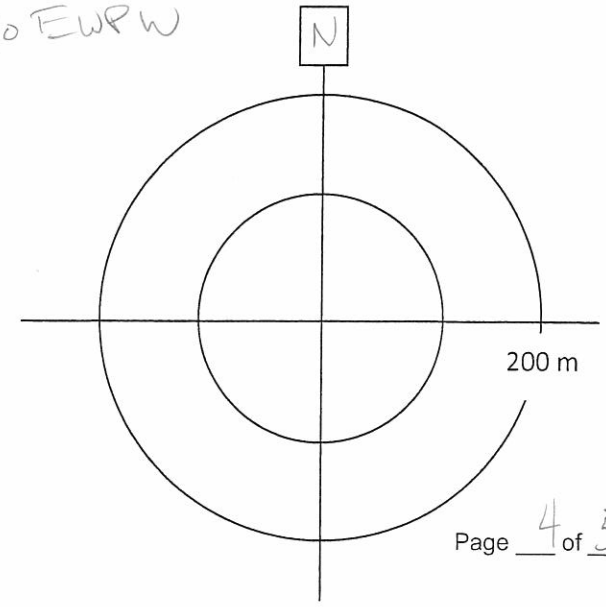

Project Number: TC111504
Survey Date:

AMEC Earth & Environmental
160 Traders Blvd East, Mississauga, ON L4Z 3K7
Tel: (905) 568-2929
Cell: (416) 459-6228
Fax: (905) 568-1686

Point Count Name: CB130 NO EWPW
Waypoint/Unit Number:
UTM:
Start Time (24 hr) 23:51
Habitat:

ID	Species	Repeat?	0-3 min	4-5 min	Distance (circle)	Direction
					<100, >100, >200 m	
					<100, >100, >200 m	
					<100, >100, >200 m	
					<100, >100, >200 m	
					<100, >100, >200 m	
					<100, >100, >200 m	
					<100, >100, >200 m	
					<100, >100, >200 m	

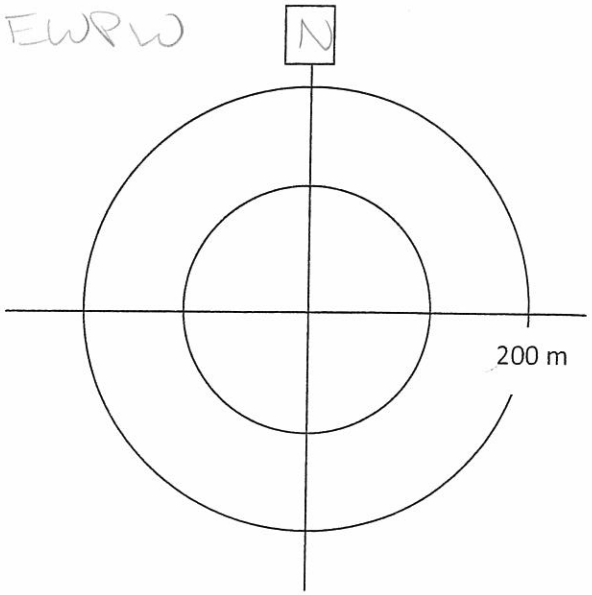

- Raining - quiet STPE 300 m away

Point Count Name:
Waypoint/Unit Number:
UTM:
Start Time (24 hr)
Habitat:

ID	Species	Repeat?	0-3 min	4-5 min	Distance (circle)	Direction
					<100, >100, >200 m	
					<100, >100, >200 m	
					<100, >100, >200 m	
					<100, >100, >200 m	
					<100, >100, >200 m	
					<100, >100, >200 m	
					<100, >100, >200 m	
					<100, >100, >200 m	

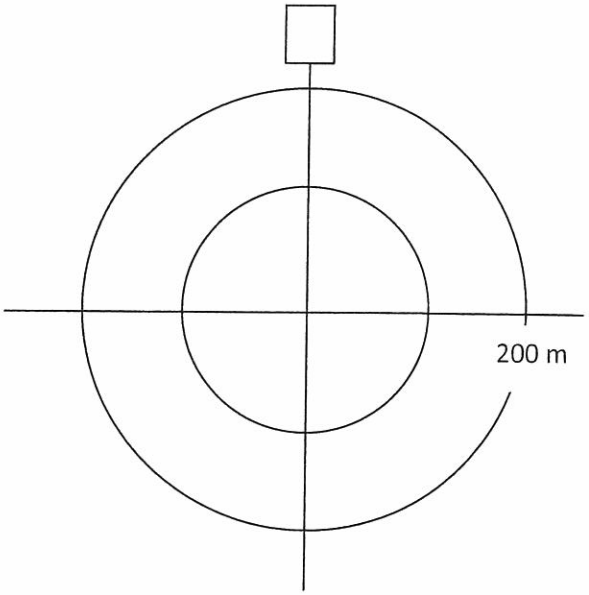

Point Count Name:
Waypoint/Unit Number:
UTM:
Start Time (24 hr)
Habitat:

ID	Species	Repeat?	0-3 min	4-5 min	Distance (circle)	Direction
					<100, >100, >200 m	
					<100, >100, >200 m	
					<100, >100, >200 m	
					<100, >100, >200 m	
					<100, >100, >200 m	
					<100, >100, >200 m	
					<100, >100, >200 m	
					<100, >100, >200 m	

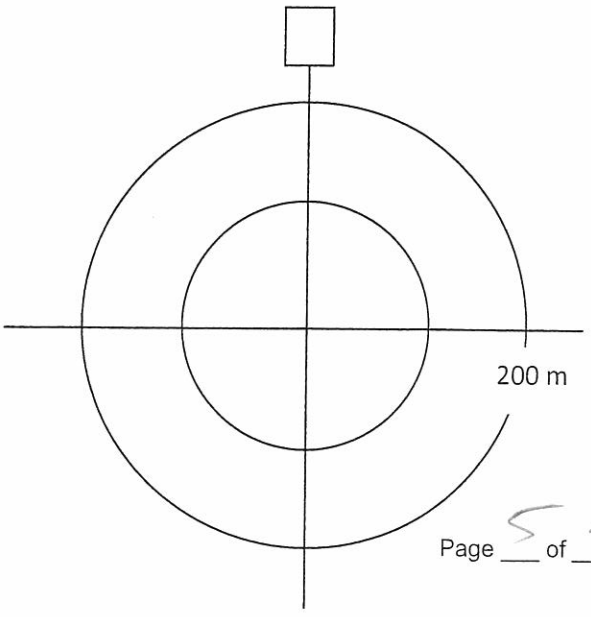

AMEC Earth & Environmental
160 Traders Blvd East, Mississauga, ON L4Z 3K7
Tel: (905) 568-2929
Cell: (416) 459-6228
Fax: (905) 568-1686

Project Number: TC111504
Survey Date: May 29, 2013.
10% cloud cover, 0 wind, no precip., No moon visible.

Point Count Name: CB89
Waypoint/Unit Number:
UTM:
Start Time (24 hr) 21:20
Habitat: Aspen + black spruce

ID	Species	Repeat?	0-3 min	4-5 min	Distance (circle)	Direction
No birds					<100, >100, >200 m	
					<100, >100, >200 m	
					<100, >100, >200 m	
					<100, >100, >200 m	
					<100, >100, >200 m	
					<100, >100, >200 m	
					<100, >100, >200 m	
					<100, >100, >200 m	

AMBI calling at lake to the E. SPPE - L3
COLD; SWTH

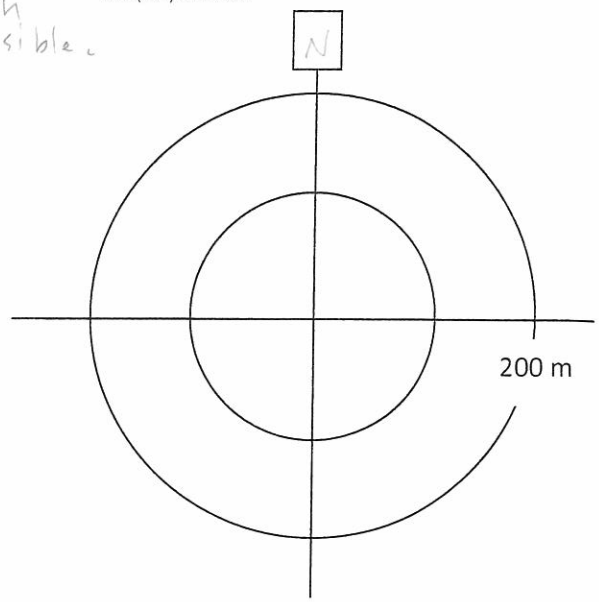

Point Count Name: CB88
Waypoint/Unit Number:
UTM:
Start Time (24 hr) 21:28
Habitat:

ID	Species	Repeat?	0-3 min	4-5 min	Distance (circle)	Direction
No crep birds					<100, >100, >200 m	
					<100, >100, >200 m	
					<100, >100, >200 m	
					<100, >100, >200 m	
					<100, >100, >200 m	
					<100, >100, >200 m	
					<100, >100, >200 m	
					<100, >100, >200 m	

SPPE - L3
AMHO - L1
WOFR - L2

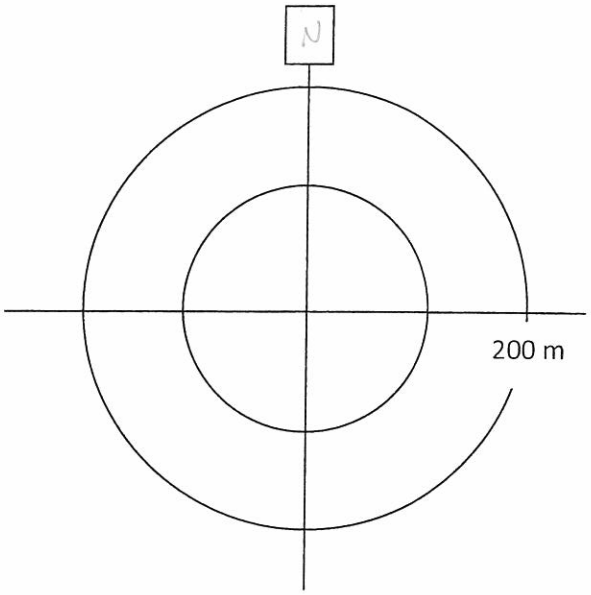

Point Count Name: CB87
Waypoint/Unit Number:
UTM:
Start Time (24 hr) 21:37
Habitat:

ID	Species	Repeat?	0-3 min	4-5 min	Distance (circle)	Direction
					<100, >100, >200 m	
					<100, >100, >200 m	
					<100, >100, >200 m	
					<100, >100, >200 m	
					<100, >100, >200 m	
					<100, >100, >200 m	
					<100, >100, >200 m	
					<100, >100, >200 m	

SPPE - L3

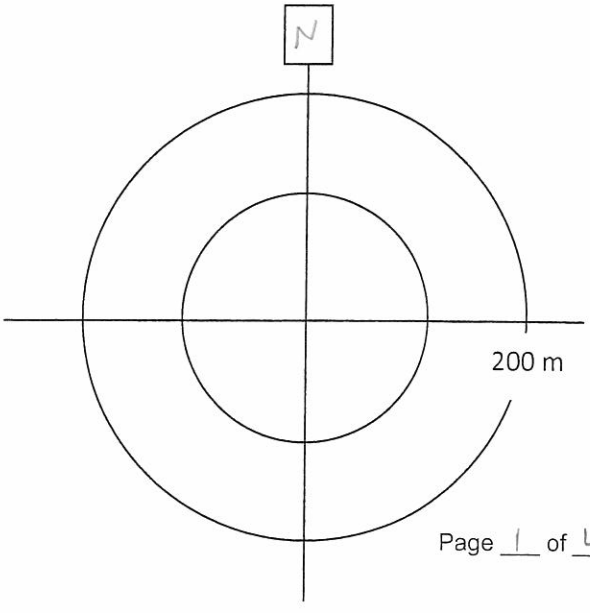

Project Number: TC111504
Survey Date:

AMEC Earth & Environmental
160 Traders Blvd East, Mississauga, ON L4Z 3K7
Tel: (905) 568-2929
Cell: (416) 459-6228
Fax: (905) 568-1686

Point Count Name: CB80
Waypoint/Unit Number: 1
UTM:
Start Time (24 hr) 21:55
Habitat:

ID	Species	Repeat?	0-3 min	4-5 min	Distance (circle)	Direction
	NSWO	N	1		<100, >100, >200 m	214
					<100, >100, >200 m	
					<100, >100, >200 m	
					<100, >100, >200 m	
					<100, >100, >200 m	
					<100, >100, >200 m	
					<100, >100, >200 m	
					<100, >100, >200 m	

SPPE - L3 - 5 of point.

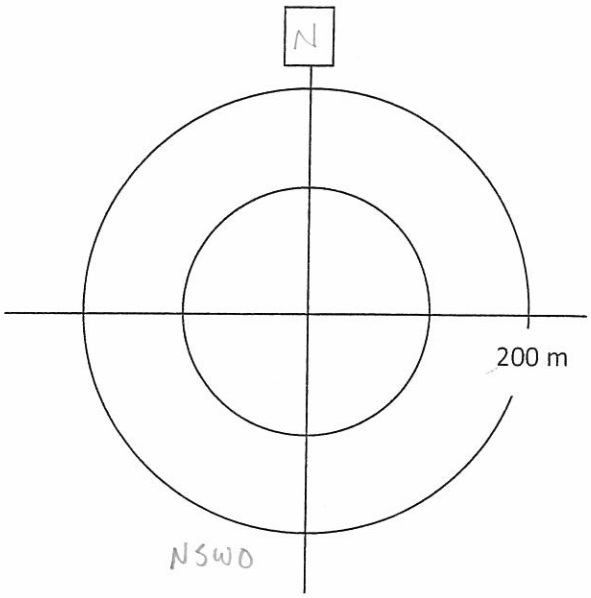

Point Count Name: CB79
Waypoint/Unit Number: 011
UTM: 17T 441512, 5281584
Start Time (24 hr) 20:07
Habitat:

ID	Species	Repeat?	0-3 min	4-5 min	Distance (circle)	Direction
					<100, >100, >200 m	
					<100, >100, >200 m	
					<100, >100, >200 m	
					<100, >100, >200 m	
					<100, >100, >200 m	
					<100, >100, >200 m	
					<100, >100, >200 m	
					<100, >100, >200 m	

SPPE - L3
WOFR - L2.

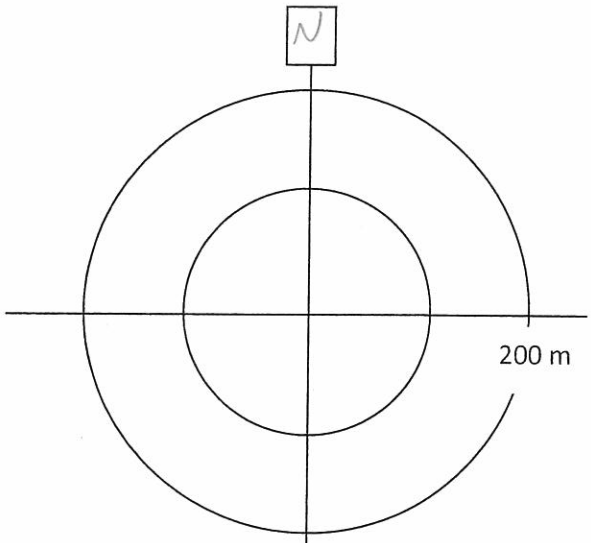

Point Count Name: CB72
Waypoint/Unit Number:
UTM:
Start Time (24 hr) 22:13
Habitat:

ID	Species	Repeat?	0-3 min	4-5 min	Distance (circle)	Direction
					<100, >100, >200 m	
					<100, >100, >200 m	
					<100, >100, >200 m	
					<100, >100, >200 m	
					<100, >100, >200 m	
					<100, >100, >200 m	
					<100, >100, >200 m	
					<100, >100, >200 m	

SPPE - L3
WOFR - L1
AMTO - L1

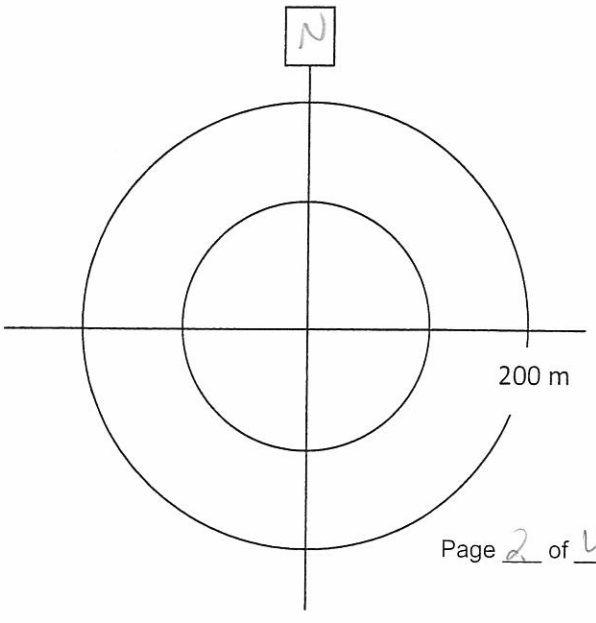

Project Number: TC111504
Survey Date:

AMEC Earth & Environmental
160 Traders Blvd East, Mississauga, ON L4Z 3K7
Tel: (905) 568-2929
Cell: (416) 459-6228
Fax: (905) 568-1686

Point Count Name: CB75
Waypoint/Unit Number:
UTM:
Start Time (24 hr) 22:45
Habitat:

ID	Species	Repeat?	0-3 min	4-5 min	Distance (circle)	Direction
No crep. birds obs.					<100, >100, >200 m	
					<100, >100, >200 m	
					<100, >100, >200 m	
					<100, >100, >200 m	
					<100, >100, >200 m	
					<100, >100, >200 m	
					<100, >100, >200 m	
					<100, >100, >200 m	

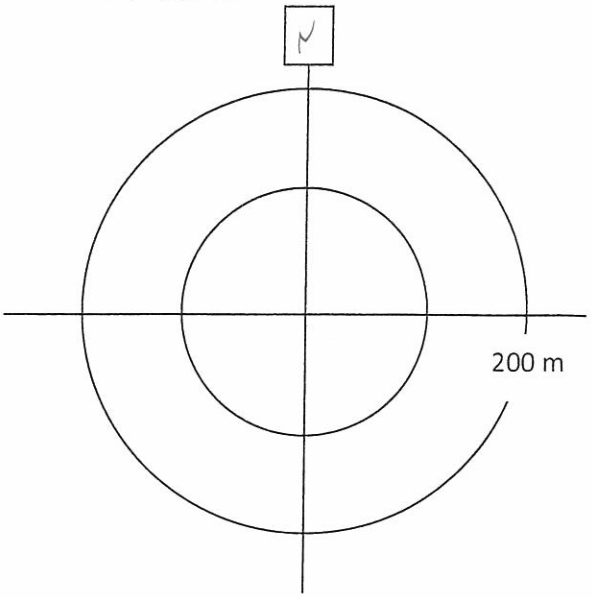

Point Count Name: CB76
Waypoint/Unit Number:
UTM:
Start Time (24 hr) 22:56
Habitat:

ID	Species	Repeat?	0-3 min	4-5 min	Distance (circle)	Direction
No crep birds observed					<100, >100, >200 m	
					<100, >100, >200 m	
					<100, >100, >200 m	
					<100, >100, >200 m	
					<100, >100, >200 m	
					<100, >100, >200 m	
					<100, >100, >200 m	
					<100, >100, >200 m	

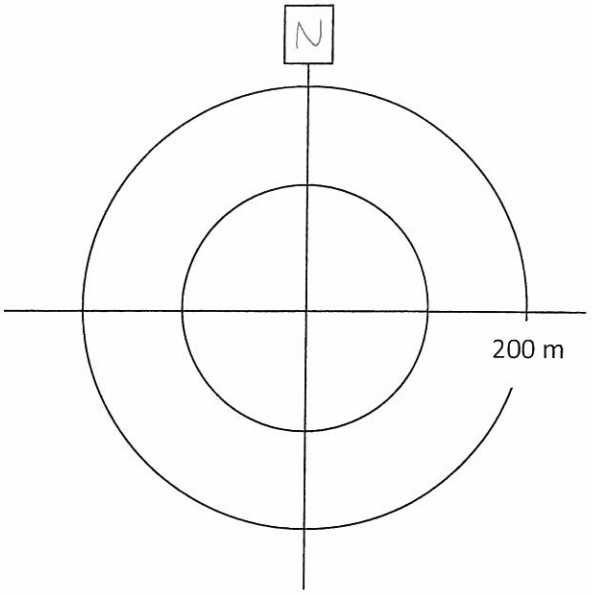

Point Count Name: CB73
Waypoint/Unit Number:
UTM:
Start Time (24 hr) 23:19
Habitat:

ID	Species	Repeat?	0-3 min	4-5 min	Distance (circle)	Direction
					<100, >100, >200 m	
					<100, >100, >200 m	
					<100, >100, >200 m	
					<100, >100, >200 m	
					<100, >100, >200 m	
					<100, >100, >200 m	
					<100, >100, >200 m	
					<100, >100, >200 m	

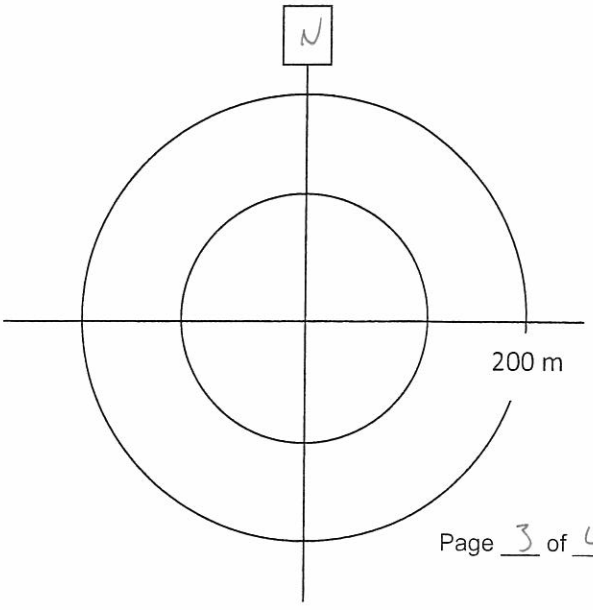

Project Number: TC111504
Survey Date:

AMEC Earth & Environmental
160 Traders Blvd East, Mississauga, ON L4Z 3K7
Tel: (905) 568-2929
Cell: (416) 459-6228
Fax: (905) 568-1686

Point Count Name: CB74
Waypoint/Unit Number: _____
UTM: _____
Start Time (24 hr) 23:29
Habitat: _____

ID	Species	Repeat?	0-3 min	4-5 min	Distance (circle)	Direction
					<100, >100, >200 m	
					<100, >100, >200 m	
					<100, >100, >200 m	
					<100, >100, >200 m	
					<100, >100, >200 m	
					<100, >100, >200 m	
					<100, >100, >200 m	
					<100, >100, >200 m	

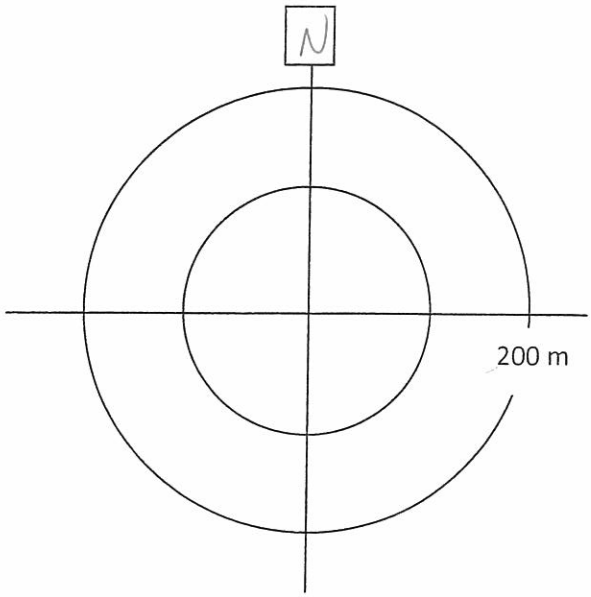

Point Count Name: CB84
Waypoint/Unit Number: 012 - E414
UTM: 17T 436854, 5275881
Start Time (24 hr) 12:11
Habitat: _____

ID	Species	Repeat?	0-3 min	4-5 min	Distance (circle)	Direction
					<100, >100, >200 m	
					<100, >100, >200 m	
					<100, >100, >200 m	
					<100, >100, >200 m	
					<100, >100, >200 m	
					<100, >100, >200 m	
					<100, >100, >200 m	
					<100, >100, >200 m	

Barred Owl

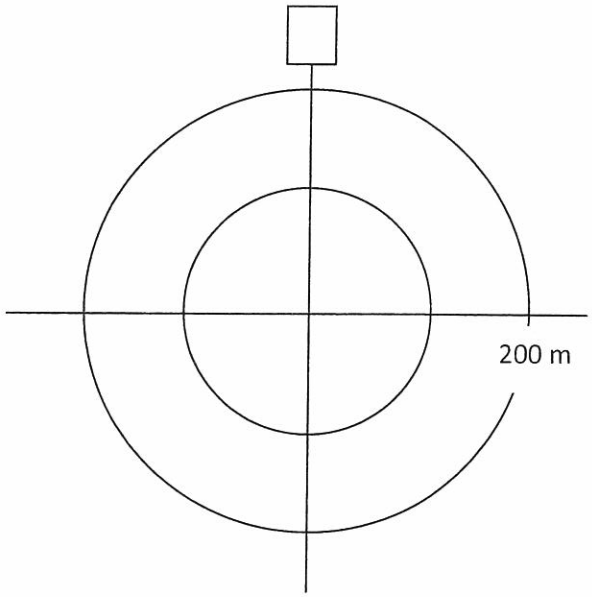

Point Count Name: _____
Waypoint/Unit Number: _____
UTM: _____
Start Time (24 hr) _____
Habitat: _____

ID	Species	Repeat?	0-3 min	4-5 min	Distance (circle)	Direction
					<100, >100, >200 m	
					<100, >100, >200 m	
					<100, >100, >200 m	
					<100, >100, >200 m	
					<100, >100, >200 m	
					<100, >100, >200 m	
					<100, >100, >200 m	
					<100, >100, >200 m	

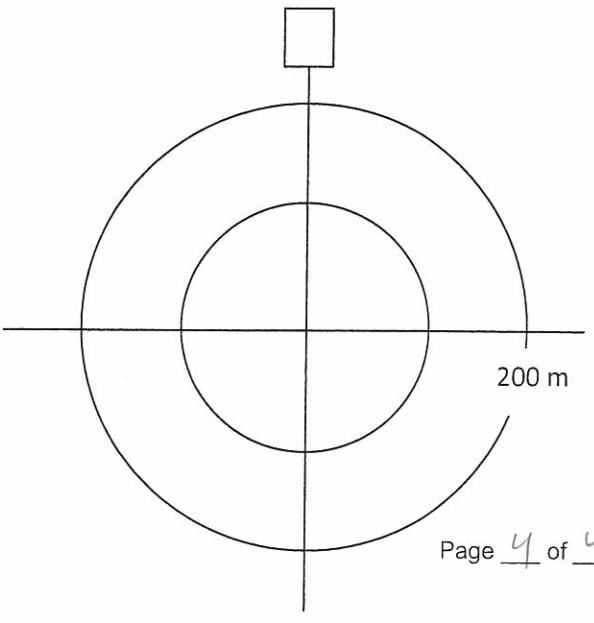

AMEC Earth & Environmental
160 Traders Blvd East, Mississauga, ON L4Z 3K7
Tel: (905) 568-2929
Cell: (416) 459-6228
Fax: (905) 568-1686

Crepuscular Breeding Bird Survey

Project Name: IAMGOLD		**Project Number:** TC121522	
Observers: Joel Jamesan			
Date: May 29, 2013	**Start Time (24hr):** 22:30	**End Time (24hr):** 00:59	**Survey Round:** 1
Weather: calm, ø clouds	**Temperature:** 13°C	**Wind:** ø-1	**Precipitation** (Circle): (0) None 1 Trace 2 Rain 3 Before Count
Moon Observed?	**Lunar Phase :** New • 1st Qtr • Full • 3rd Qtr		

rained earlier during the day

Point Count Name: CB54
Waypoint/Unit Number:
UTM:
Start Time (24 hr) 22:33
Habitat:

No EWPW

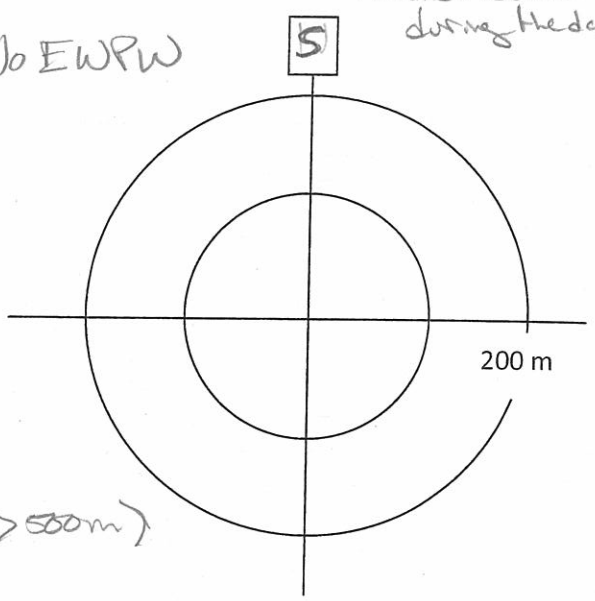

ID	Species	Repeat?	0-3 min	4-5 min	Distance (circle)	Direction
					<100, >100, >200 m	
					<100, >100, >200 m	
					<100, >100, >200 m	
					<100, >100, >200 m	
					<100, >100, >200 m	
					<100, >100, >200 m	
					<100, >100, >200 m	
					<100, >100, >200 m	

- quiet, chorus of peeper but very far (>500m)

Point Count Name: CB55
Waypoint/Unit Number: 22:43
UTM:
Start Time (24 hr) 22:43
Habitat:

No EWPW

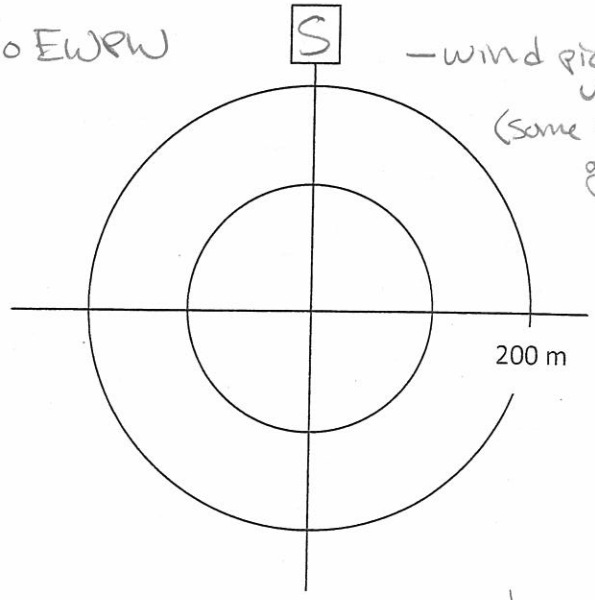

- wind picking up (some strong gusts)

ID	Species	Repeat?	0-3 min	4-5 min	Distance (circle)	Direction
					<100, >100, >200 m	
					<100, >100, >200 m	
					<100, >100, >200 m	
					<100, >100, >200 m	
					<100, >100, >200 m	
					<100, >100, >200 m	
					<100, >100, >200 m	
					<100, >100, >200 m	

- Wood frog (level 1)
- SPPE (level 2)
- Loon (≥500m south)

Project Number:
Survey Date:

AMEC Earth & Environmental
160 Traders Blvd East, Mississauga, ON L4Z 3K7
Tel: (905) 568-2929
Cell: (416) 459-6228
Fax: (905) 568-1686

Joel Jamieson
May 29, 2013

Point Count Name: CB56B ← could not find access rd to CB56
Waypoint/Unit Number: CB56B E413
UTM: 17T 0452722 5303427
Start Time (24 hr) 22:59
Habitat:

No EWPW

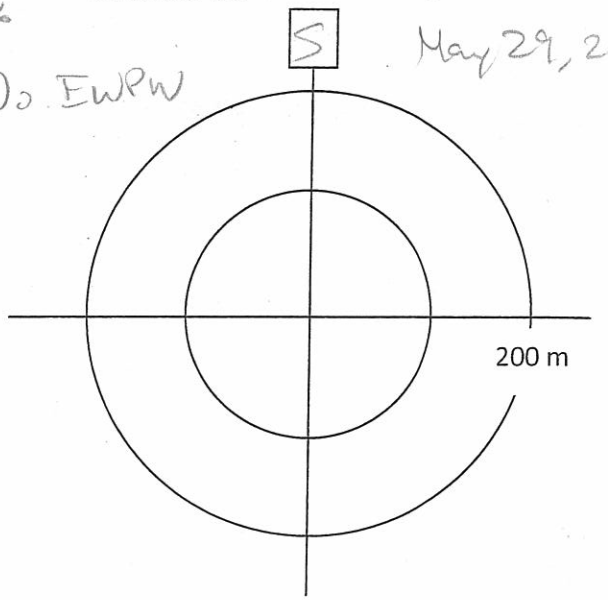

ID	Species	Repeat?	0-3 min	4-5 min	Distance (circle)	Direction
					<100, >100, >200 m	
					<100, >100, >200 m	
					<100, >100, >200 m	
					<100, >100, >200 m	
					<100, >100, >200 m	
					<100, >100, >200 m	
					<100, >100, >200 m	
					<100, >100, >200 m	

SPPE ≥ 250m away (level 3)

Point Count Name: CB62
Waypoint/Unit Number:
UTM:
Start Time (24 hr) ~~23~~ 23:52
Habitat:

No EWPW

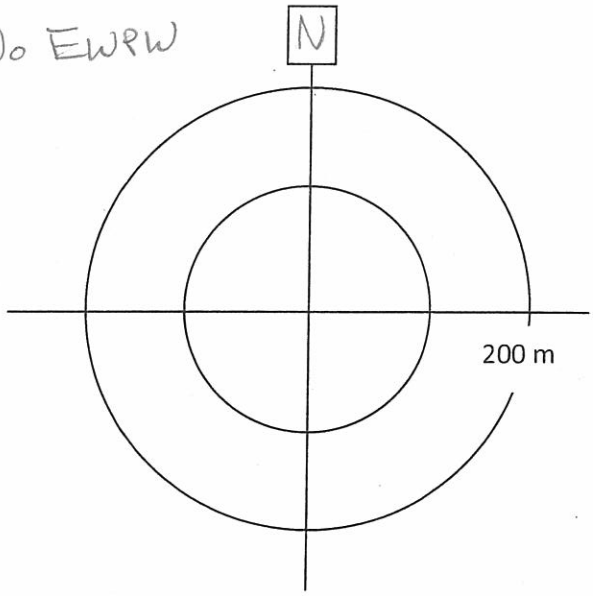

ID	Species	Repeat?	0-3 min	4-5 min	Distance (circle)	Direction
					<100, >100, >200 m	
					<100, >100, >200 m	
					<100, >100, >200 m	
					<100, >100, >200 m	
					<100, >100, >200 m	
					<100, >100, >200 m	
					<100, >100, >200 m	
					<100, >100, >200 m	

Point Count Name: CB63
Waypoint/Unit Number:
UTM:
Start Time (24 hr) 00:01
Habitat:

No EWPW

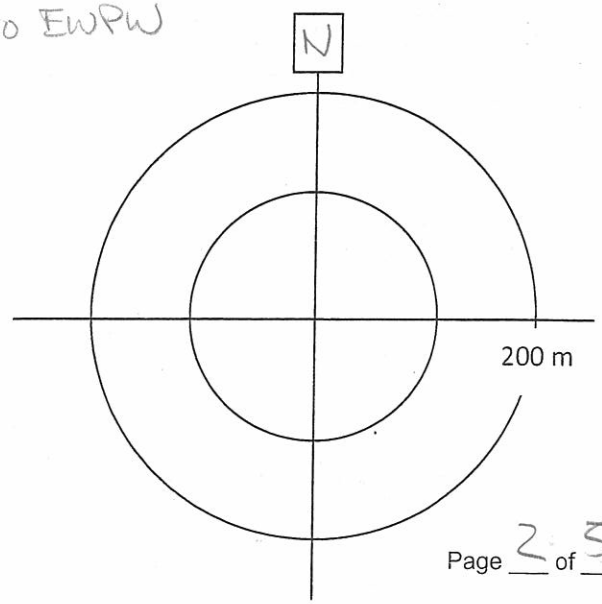

ID	Species	Repeat?	0-3 min	4-5 min	Distance (circle)	Direction
					<100, >100, >200 m	
					<100, >100, >200 m	
					<100, >100, >200 m	
					<100, >100, >200 m	
					<100, >100, >200 m	
					<100, >100, >200 m	
					<100, >100, >200 m	
					<100, >100, >200 m	

AMTO, SPPE } very distant (≥500-700m)

Cannot discern levels, too distant/faint

Project Number: TC111504
Survey Date:

AMEC Earth & Environmental
160 Traders Blvd East, Mississauga, ON L4Z 3K7
Tel: (905) 568-2929
Cell: (416) 459-6228
Fax: (905) 568-1686

Joel Jamesun

May 29, 2013

Point Count Name: CB64
Waypoint/Unit Number:
UTM:
Start Time (24 hr) 00:09
Habitat:

No EWPW

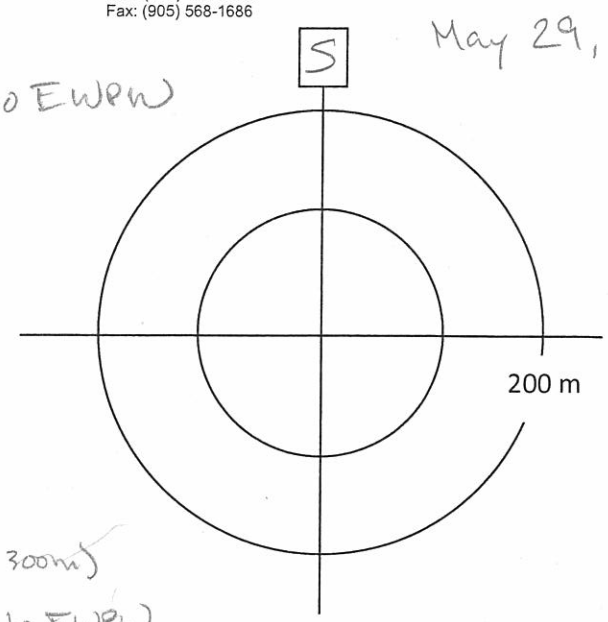

ID	Species	Repeat?	0-3 min	4-5 min	Distance (circle)	Direction
					<100, >100, >200 m	
					<100, >100, >200 m	
					<100, >100, >200 m	
					<100, >100, >200 m	
					<100, >100, >200 m	
					<100, >100, >200 m	
					<100, >100, >200 m	
					<100, >100, >200 m	

- SPPE (level 3, 500m) — Northern Sawhet-owl (west 300m)
- Wood frog (level 1)

Point Count Name: CB65
Waypoint/Unit Number:
UTM:
Start Time (24 hr) 00:18
Habitat:

No EWPW

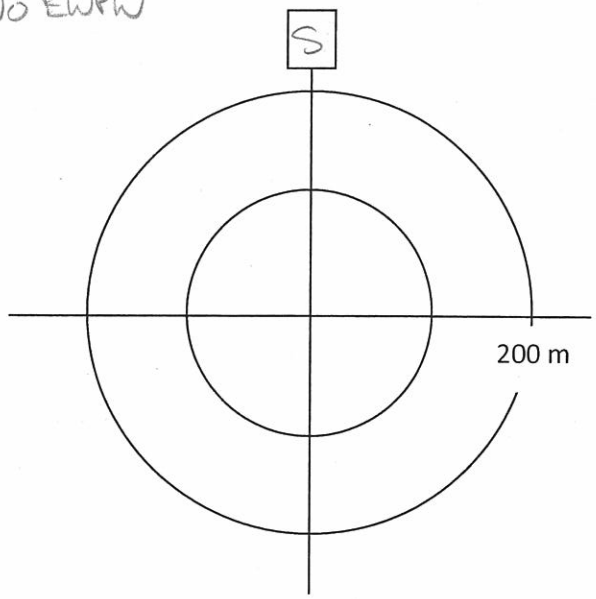

ID	Species	Repeat?	0-3 min	4-5 min	Distance (circle)	Direction
					<100, >100, >200 m	
					<100, >100, >200 m	
					<100, >100, >200 m	
					<100, >100, >200 m	
					<100, >100, >200 m	
					<100, >100, >200 m	
					<100, >100, >200 m	
					<100, >100, >200 m	

SPPE (level 3) (100m)

Point Count Name: CB66
Waypoint/Unit Number:
UTM:
Start Time (24 hr) 00:25
Habitat:

No EWPW

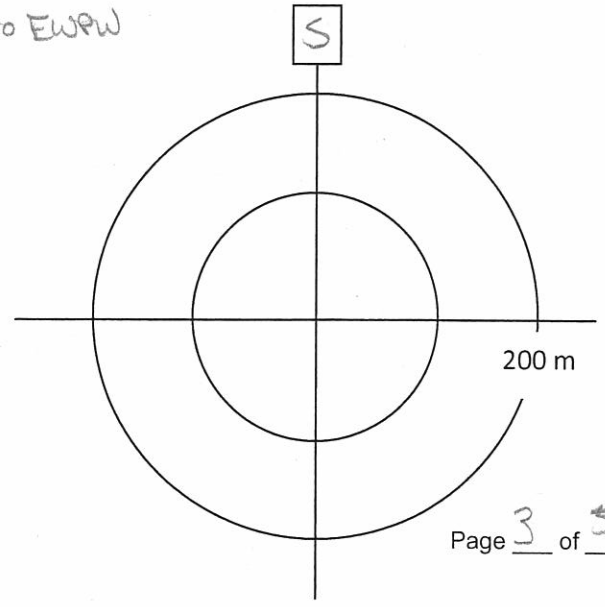

ID	Species	Repeat?	0-3 min	4-5 min	Distance (circle)	Direction
					<100, >100, >200 m	
					<100, >100, >200 m	
					<100, >100, >200 m	
					<100, >100, >200 m	
					<100, >100, >200 m	
					<100, >100, >200 m	
					<100, >100, >200 m	
					<100, >100, >200 m	

SPPE (level 3) (50-100m)

Project Number: TC111504
Survey Date:

AMEC Earth & Environmental
160 Traders Blvd East, Mississauga, ON L4Z 3K7
Tel: (905) 568-2929
Cell: (416) 459-6228
Fax: (905) 568-1686

Joel Jameson
May 29, 2013

Point Count Name: CB67
Waypoint/Unit Number:
UTM:
Start Time (24 hr) 00:32
Habitat:

No EWPW

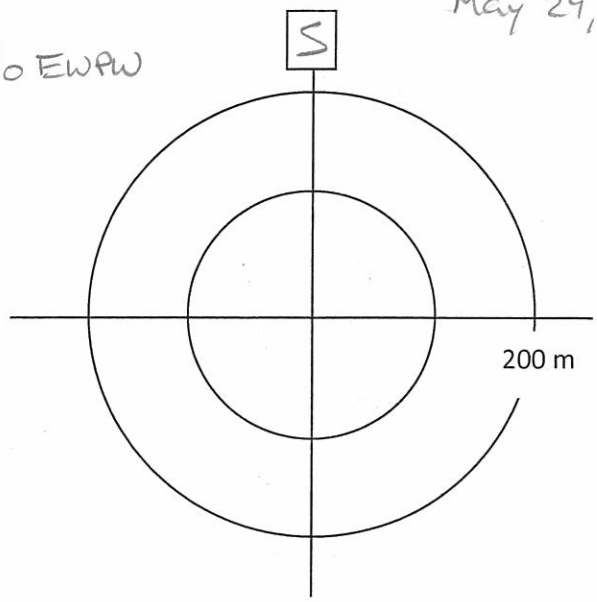

ID	Species	Repeat?	0-3 min	4-5 min	Distance (circle)	Direction
					<100, >100, >200 m	
					<100, >100, >200 m	
					<100, >100, >200 m	
					<100, >100, >200 m	
					<100, >100, >200 m	
					<100, >100, >200 m	
					<100, >100, >200 m	
					<100, >100, >200 m	

AMTO (level 1) (100m)
SPPE (level 2) → distant ~300m

Point Count Name: CB68
Waypoint/Unit Number:
UTM:
Start Time (24 hr) 00:39
Habitat:

No EWPW

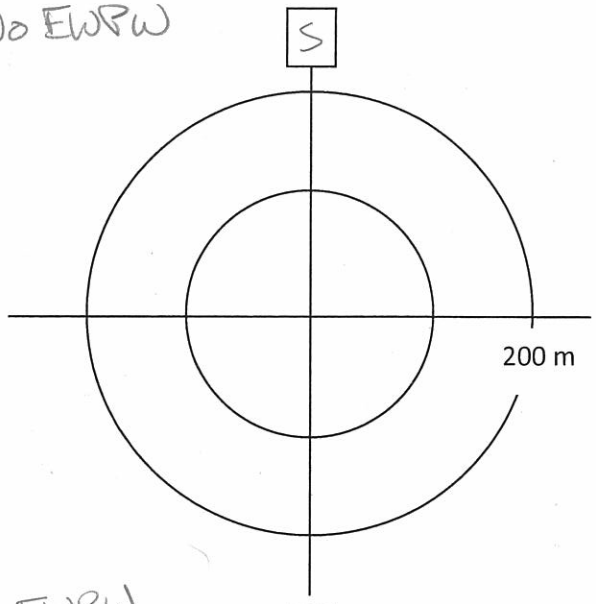

ID	Species	Repeat?	0-3 min	4-5 min	Distance (circle)	Direction
					<100, >100, >200 m	
					<100, >100, >200 m	
					<100, >100, >200 m	
					<100, >100, >200 m	
					<100, >100, >200 m	
					<100, >100, >200 m	
					<100, >100, >200 m	
					<100, >100, >200 m	

- SPPE (level 3)
- wood frog (level 1)
- AMTO (level 1)

Point Count Name: CB69
Waypoint/Unit Number:
UTM:
Start Time (24 hr) 00:46
Habitat:

No EWPW

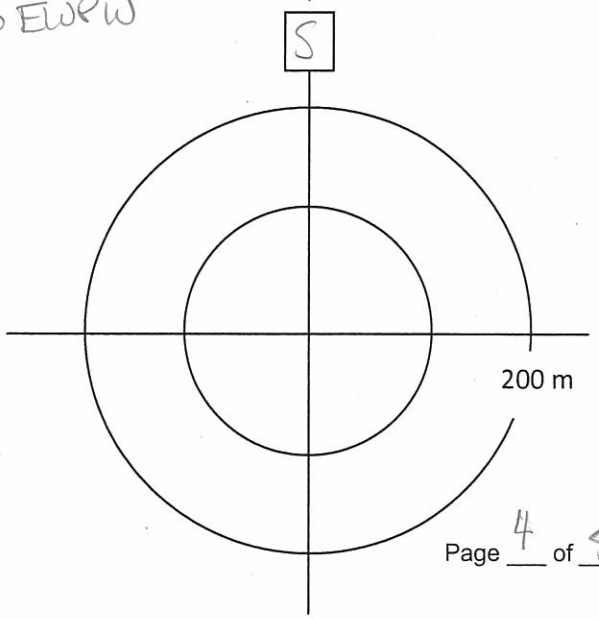

ID	Species	Repeat?	0-3 min	4-5 min	Distance (circle)	Direction
					<100, >100, >200 m	
					<100, >100, >200 m	
					<100, >100, >200 m	
					<100, >100, >200 m	
					<100, >100, >200 m	
					<100, >100, >200 m	
					<100, >100, >200 m	
					<100, >100, >200 m	

SPPE (level 2) (20m)
wood frog (level 1)

Project Number: TC111504
Survey Date:

Joel Jamesa
May 29, 2013

AMEC Earth & Environmental
160 Traders Blvd East, Mississauga, ON L4Z 3K7
Tel: (905) 568-2929
Cell: (416) 459-6228
Fax: (905) 568-1686

Point Count Name: CB 70
Waypoint/Unit Number:
UTM:
Start Time (24 hr) 00:53
Habitat:

No EWPW

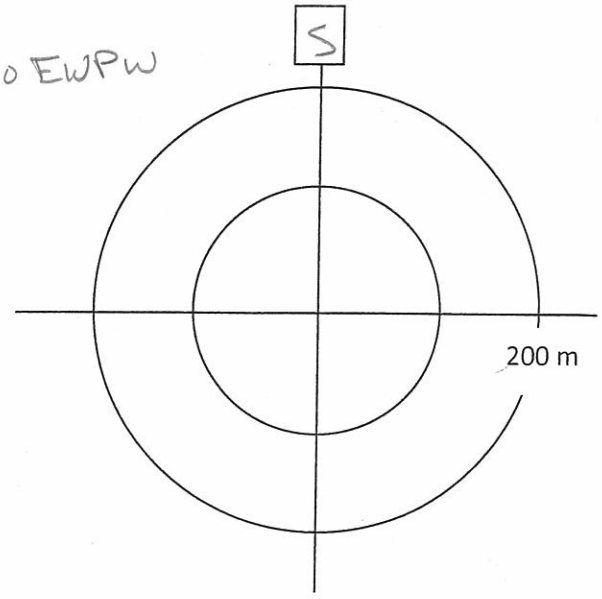

ID	Species	Repeat?	0-3 min	4-5 min	Distance (circle)	Direction
					<100, >100, >200 m	
					<100, >100, >200 m	
					<100, >100, >200 m	
					<100, >100, >200 m	
					<100, >100, >200 m	
					<100, >100, >200 m	
					<100, >100, >200 m	
					<100, >100, >200 m	

SPPE (level 3, ~500 m)

Point Count Name: CB 71
Waypoint/Unit Number:
UTM:
Start Time (24 hr) 00:59
Habitat:

No EWPW

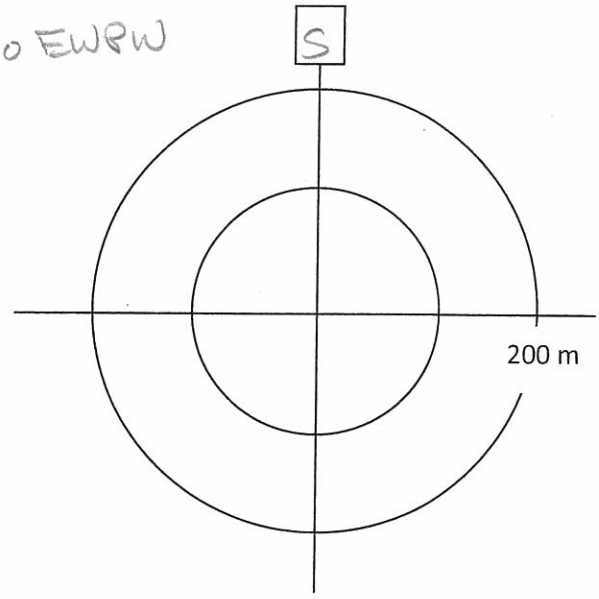

ID	Species	Repeat?	0-3 min	4-5 min	Distance (circle)	Direction
					<100, >100, >200 m	
					<100, >100, >200 m	
					<100, >100, >200 m	
					<100, >100, >200 m	
					<100, >100, >200 m	
					<100, >100, >200 m	
					<100, >100, >200 m	
					<100, >100, >200 m	

SPPE (level 3) (50-100 m)
AMTO (level 1) ~50m

Point Count Name:
Waypoint/Unit Number:
UTM:
Start Time (24 hr)
Habitat:

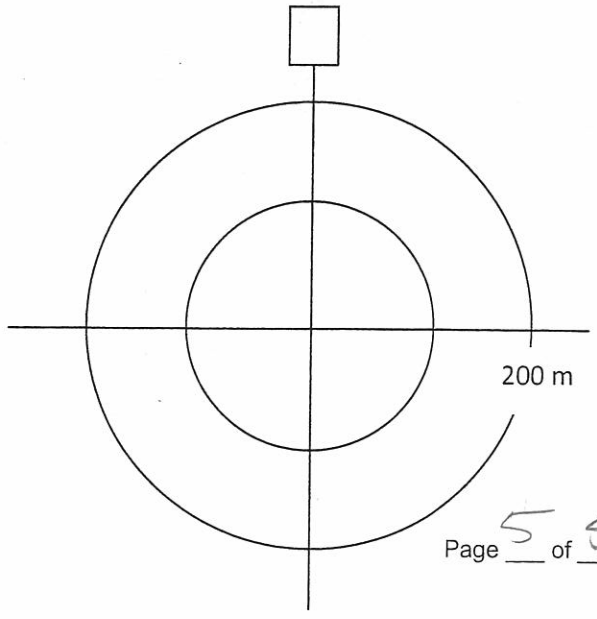

ID	Species	Repeat?	0-3 min	4-5 min	Distance (circle)	Direction
					<100, >100, >200 m	
					<100, >100, >200 m	
					<100, >100, >200 m	
					<100, >100, >200 m	
					<100, >100, >200 m	
					<100, >100, >200 m	
					<100, >100, >200 m	
					<100, >100, >200 m	

AMEC Earth & Environmental
160 Traders Blvd East, Mississauga, ON L4Z 3K7
Tel: (905) 568-2929
Cell: (416) 459-6228
Fax: (905) 568-1686

Crepuscular Breeding Bird Survey

Project Name: IAMGOLD.		Project Number: TL121522	
Observers: Jon Plaizier & Jeff Balsdon			
Date: May 30, 2013	Start Time (24hr): 21:14	End Time (24hr): 23:48	Survey Round: 1
Weather: 20% cloud cover	Temperature:	Wind: 1	Precipitation (Circle): 0 None 1 Trace 2 Rain 3 Before Count
Moon Observed?	Lunar Phase : New • 1st Qtr • Full • 3rd Qtr		

Point Count Name: _____
Waypoint/Unit Number: 022
UTM: 17T 466523, 5283746.
Start Time (24 hr) @ 21:14
Habitat: _____

ID	Species	Repeat?	0-3 min	4-5 min	Distance (circle)	Direction
No crep. birds obs—					<100, >100, >200 m	
					<100, >100, >200 m	
					<100, >100, >200 m	
					<100, >100, >200 m	
					<100, >100, >200 m	
					<100, >100, >200 m	
					<100, >100, >200 m	
					<100, >100, >200 m	

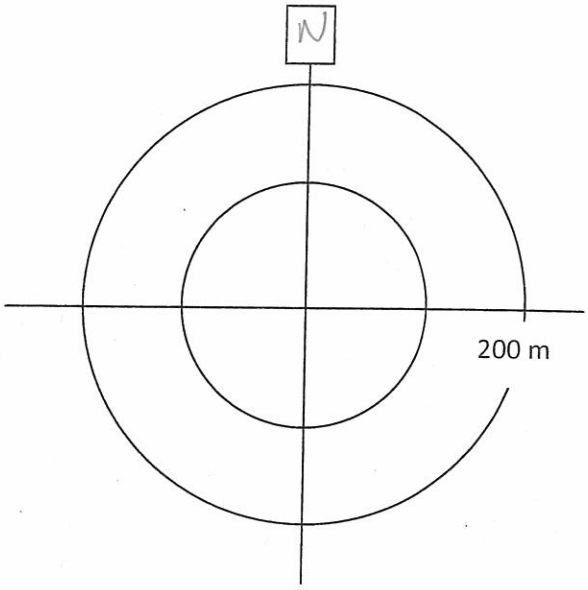

SOPE - L3 (to the S)
AMTO - L1

Point Count Name: _____
Waypoint/Unit Number: 023
UTM: 17T 466756, 5283093
Start Time (24 hr) 21:25
Habitat: _____

ID	Species	Repeat?	0-3 min	4-5 min	Distance (circle)	Direction
					<100, >100, >200 m	
					<100, >100, >200 m	
					<100, >100, >200 m	
					<100, >100, >200 m	
					<100, >100, >200 m	
					<100, >100, >200 m	
					<100, >100, >200 m	
					<100, >100, >200 m	

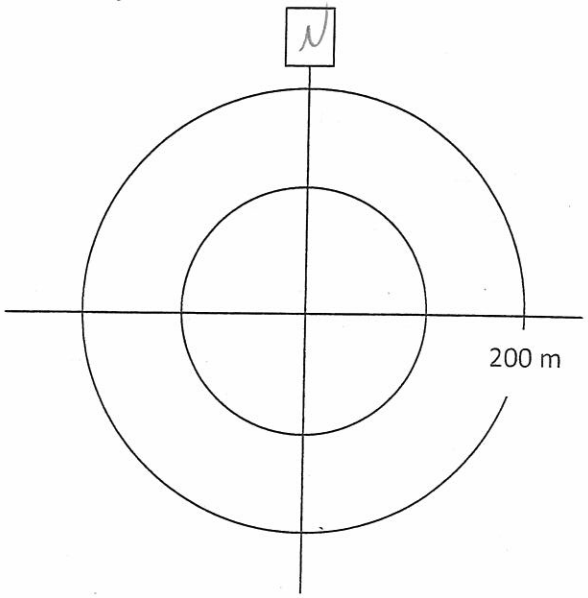

Project Number:
Survey Date:

AMEC Earth & Environmental
160 Traders Blvd East, Mississauga, ON L4Z 3K7
Tel: (905) 568-2929
Cell: (416) 459-6228
Fax: (905) 568-1686

Point Count Name: _____
Waypoint/Unit Number: 024
UTM: 17T 467287, 5282206
Start Time (24 hr) 21:33
Habitat: jackpine / birch / aspen forest

ID	Species	Repeat?	0-3 min	4-5 min	Distance (circle)	Direction
					<100, >100, >200 m	
					<100, >100, >200 m	
					<100, >100, >200 m	
					<100, >100, >200 m	
					<100, >100, >200 m	
					<100, >100, >200 m	
					<100, >100, >200 m	
					<100, >100, >200 m	

SPPE - L3
AMTO - L2

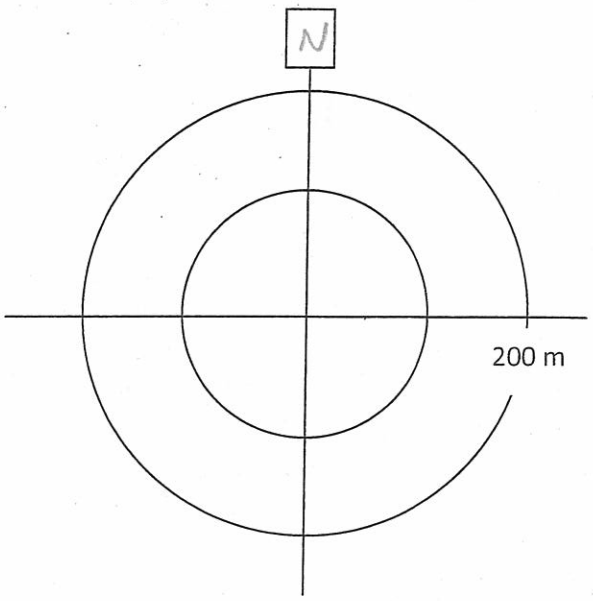

Point Count Name: _____
Waypoint/Unit Number: 025
UTM: 17T 467479, 5281274
Start Time (24 hr) 21:40
Habitat: Aspen dom. forest.

ID	Species	Repeat?	0-3 min	4-5 min	Distance (circle)	Direction
					<100, >100, >200 m	
					<100, >100, >200 m	
					<100, >100, >200 m	
					<100, >100, >200 m	
					<100, >100, >200 m	
					<100, >100, >200 m	
					<100, >100, >200 m	
					<100, >100, >200 m	

SPPE - L3
AMTO - L1

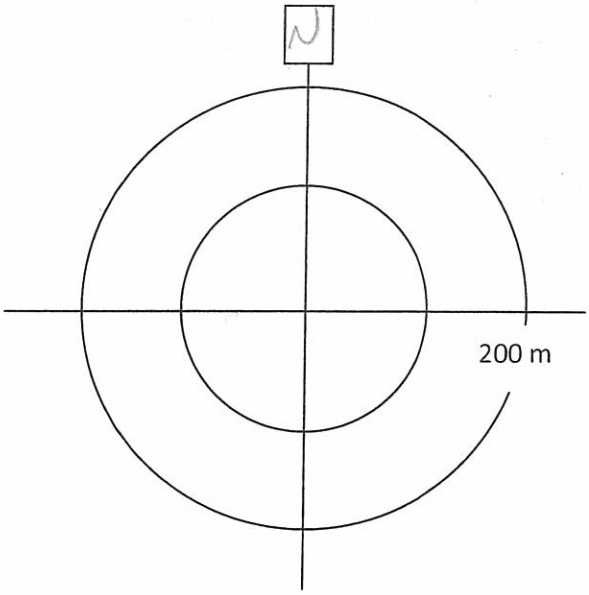

Point Count Name: _____
Waypoint/Unit Number: 026
UTM: 17T 468040, 5280174
Start Time (24 hr) 21:49
Habitat: _____

ID	Species	Repeat?	0-3 min	4-5 min	Distance (circle)	Direction
					<100, >100, >200 m	
					<100, >100, >200 m	
					<100, >100, >200 m	
					<100, >100, >200 m	
					<100, >100, >200 m	
					<100, >100, >200 m	
					<100, >100, >200 m	
					<100, >100, >200 m	

SPPE - L3
AMTO - L2.

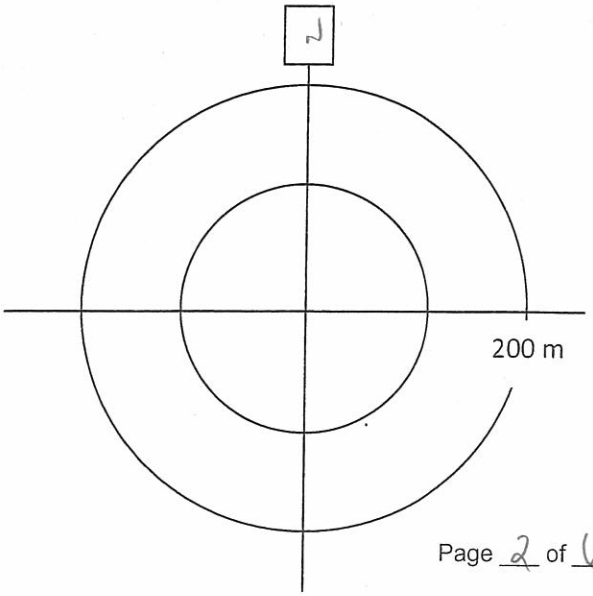

Project Number: TC111504
Survey Date:

AMEC Earth & Environmental
160 Traders Blvd East, Mississauga, ON L4Z 3K7
Tel: (905) 568-2929
Cell: (416) 459-6228
Fax: (905) 568-1686

Point Count Name: _____
Waypoint/Unit Number: 027
UTM: 17T 467992, 5279167
Start Time (24 hr) 21:58
Habitat: White Pine stand, mixed birch/spruce,

ID	Species	Repeat?	0-3 min	4-5 min	Distance (circle)	Direction
					<100, >100, >200 m	
					<100, >100, >200 m	
					<100, >100, >200 m	
					<100, >100, >200 m	
					<100, >100, >200 m	
					<100, >100, >200 m	
					<100, >100, >200 m	
					<100, >100, >200 m	

SPPE-L3, AMTO-L1.

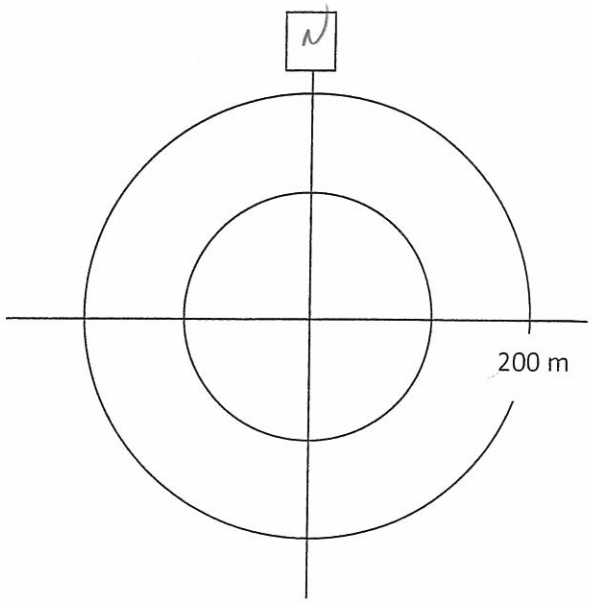

Point Count Name: _____
Waypoint/Unit Number: 028
UTM: 17T 467740, 5274349
Start Time (24 hr) 22:06
Habitat: _____

ID	Species	Repeat?	0-3 min	4-5 min	Distance (circle)	Direction
					<100, >100, >200 m	
					<100, >100, >200 m	
					<100, >100, >200 m	
					<100, >100, >200 m	
					<100, >100, >200 m	
					<100, >100, >200 m	
					<100, >100, >200 m	
					<100, >100, >200 m	

SPPE-L3
AMTO-L1

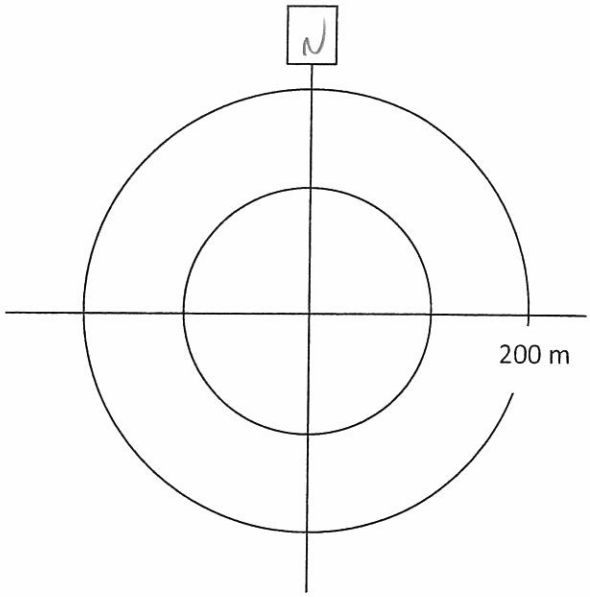

Point Count Name: _____
Waypoint/Unit Number: 029
UTM: 17T 467262, 5277400
Start Time (24 hr) 22:15
Habitat: _____

ID	Species	Repeat?	0-3 min	4-5 min	Distance (circle)	Direction
	AMWO			2 birds	<100, >100, >200 m	
					<100, >100, >200 m	
					<100, >100, >200 m	
					<100, >100, >200 m	
					<100, >100, >200 m	
					<100, >100, >200 m	
					<100, >100, >200 m	
					<100, >100, >200 m	

SPPE-L3
AMTO-L2-3

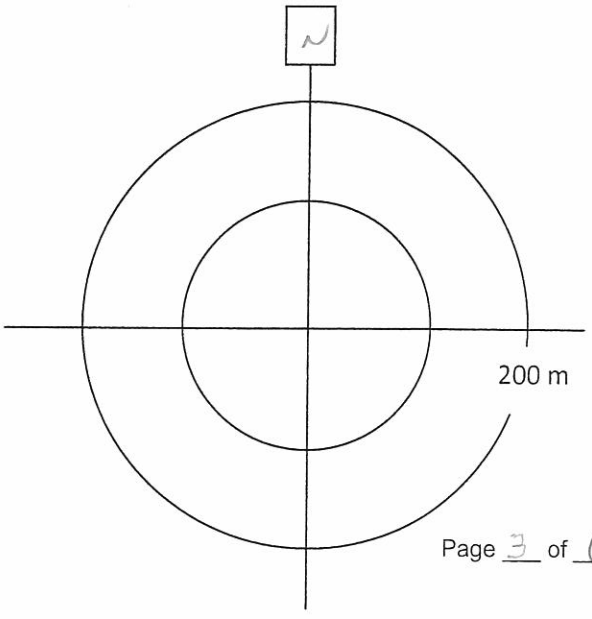

Project Number: TC111504
Survey Date:

AMEC Earth & Environmental
160 Traders Blvd East, Mississauga, ON L4Z 3K7
Tel: (905) 568-2929
Cell: (416) 459-6228
Fax: (905) 568-1686

Point Count Name: Not registered
Waypoint/Unit Number: 030
UTM: 17T 467320, 5276398
Start Time (24 hr) 22:23
Habitat:

ID	Species	Repeat?	0-3 min	4-5 min	Distance (circle)	Direction
					<100, >100, >200 m	
					<100, >100, >200 m	
					<100, >100, >200 m	
					<100, >100, >200 m	
					<100, >100, >200 m	
					<100, >100, >200 m	
					<100, >100, >200 m	
					<100, >100, >200 m	

SPPE-L3, AMTO

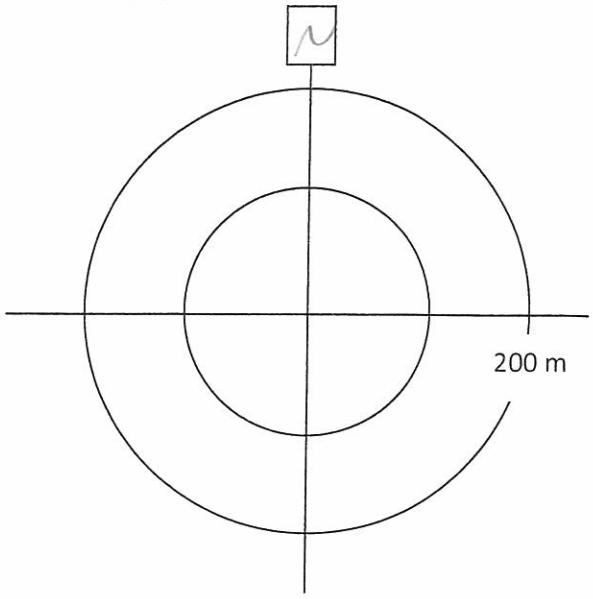

Point Count Name:
Waypoint/Unit Number: 031
UTM: 17T 467464, 5275367
Start Time (24 hr) 22:31
Habitat:

ID	Species	Repeat?	0-3 min	4-5 min	Distance (circle)	Direction
					<100, >100, >200 m	
					<100, >100, >200 m	
					<100, >100, >200 m	
					<100, >100, >200 m	
					<100, >100, >200 m	
					<100, >100, >200 m	
					<100, >100, >200 m	
					<100, >100, >200 m	

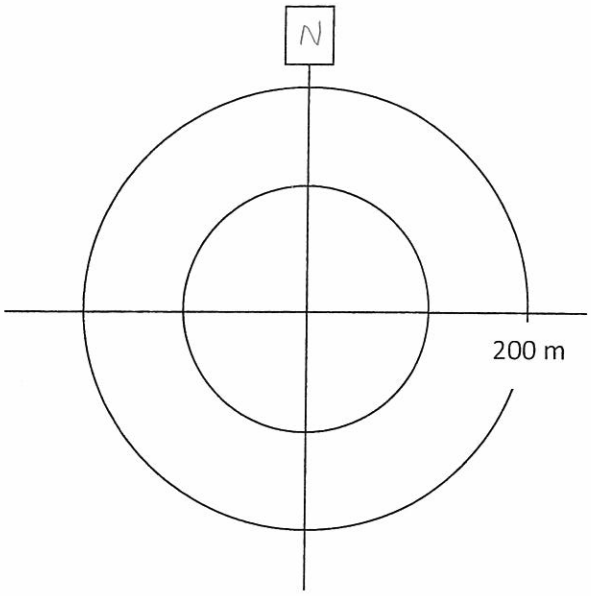

Point Count Name:
Waypoint/Unit Number: 032
UTM: 17T 467681, 5274427
Start Time (24 hr) 22:40
Habitat:

ID	Species	Repeat?	0-3 min	4-5 min	Distance (circle)	Direction
					<100, >100, >200 m	
					<100, >100, >200 m	
					<100, >100, >200 m	
					<100, >100, >200 m	
					<100, >100, >200 m	
					<100, >100, >200 m	
					<100, >100, >200 m	
					<100, >100, >200 m	

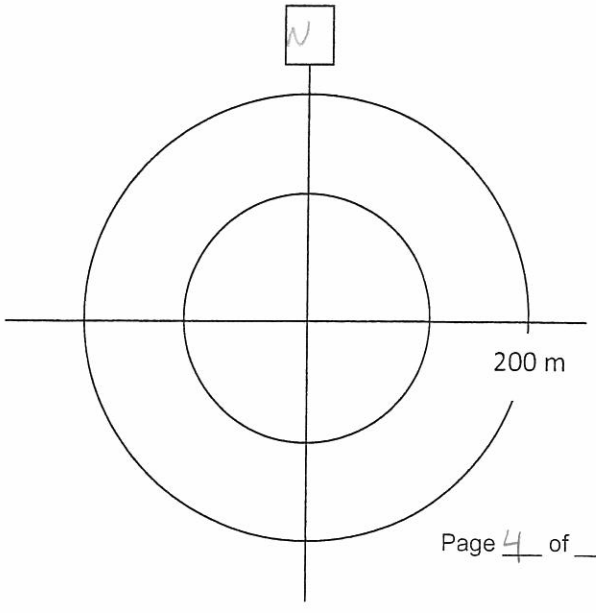

Project Number: TC111504
Survey Date:

AMEC Earth & Environmental
160 Traders Blvd East, Mississauga, ON L4Z 3K7
Tel: (905) 568-2929
Cell: (416) 459-6228
Fax: (905) 568-1686

Point Count Name: _____
Waypoint/Unit Number: 033
UTM: 17T 467509, 5273417
Start Time (24 hr) 22:48
Habitat: _____

ID	Species	Repeat?	0-3 min	4-5 min	Distance (circle)	Direction
					<100, >100, >200 m	
					<100, >100, >200 m	
					<100, >100, >200 m	
					<100, >100, >200 m	
					<100, >100, >200 m	
					<100, >100, >200 m	
					<100, >100, >200 m	
					<100, >100, >200 m	

SPPE-13, AMTO-11

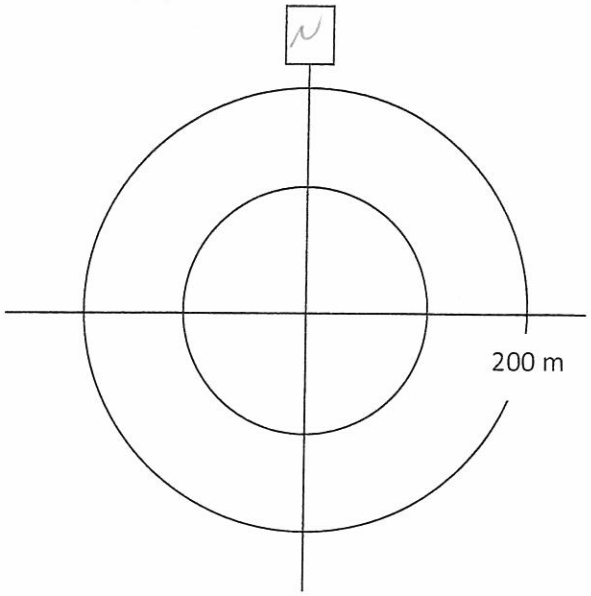

Point Count Name: _____
Waypoint/Unit Number: 034
UTM: 17T 467626, 5272452
Start Time (24 hr) 22:57
Habitat: _____

ID	Species	Repeat?	0-3 min	4-5 min	Distance (circle)	Direction
					<100, >100, >200 m	
					<100, >100, >200 m	
					<100, >100, >200 m	
					<100, >100, >200 m	
					<100, >100, >200 m	
					<100, >100, >200 m	
					<100, >100, >200 m	
					<100, >100, >200 m	

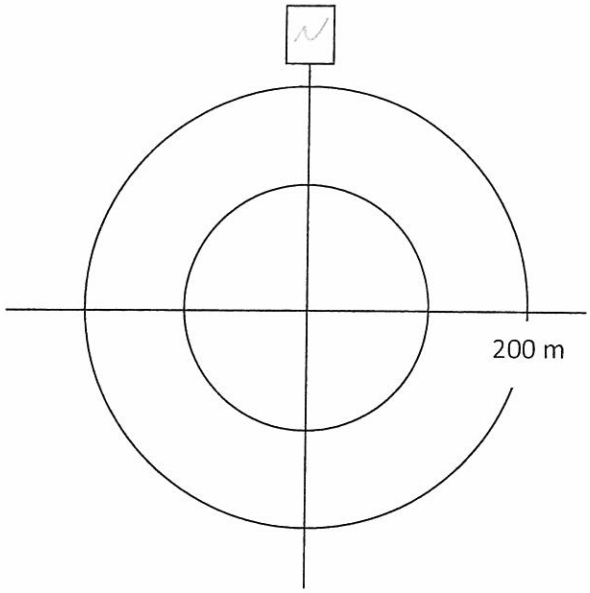

Point Count Name: CB133
Waypoint/Unit Number: _____
UTM: _____
Start Time (24 hr) 23:36
Habitat: just past wagon.

ID	Species	Repeat?	0-3 min	4-5 min	Distance (circle)	Direction
					<100, >100, >200 m	
					<100, >100, >200 m	
					<100, >100, >200 m	
					<100, >100, >200 m	
					<100, >100, >200 m	
					<100, >100, >200 m	
					<100, >100, >200 m	
					<100, >100, >200 m	

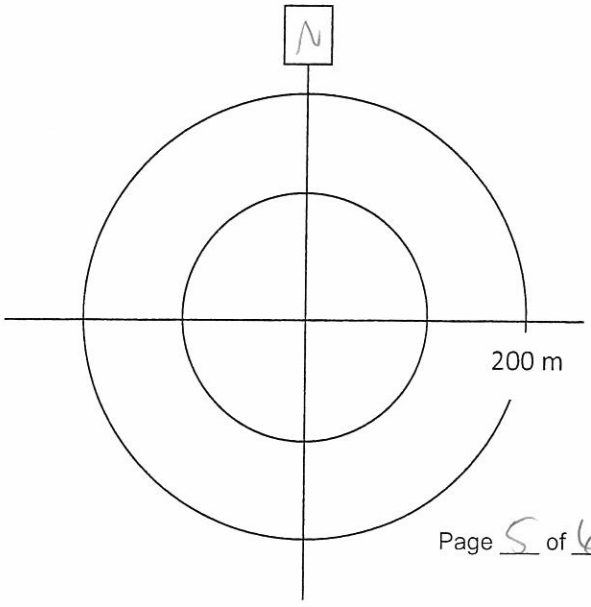

Project Number: TC111504
Survey Date:

AMEC Earth & Environmental
160 Traders Blvd East, Mississauga, ON L4Z 3K7
Tel: (905) 568-2929
Cell: (416) 459-6228
Fax: (905) 568-1686

Point Count Name: CB134
Waypoint/Unit Number: _____
UTM: _____
Start Time (24 hr) 23:42
Habitat: _____

ID	Species	Repeat?	0-3 min	4-5 min	Distance (circle)	Direction
					<100, >100, >200 m	
					<100, >100, >200 m	
					<100, >100, >200 m	
					<100, >100, >200 m	
					<100, >100, >200 m	
					<100, >100, >200 m	
					<100, >100, >200 m	
					<100, >100, >200 m	

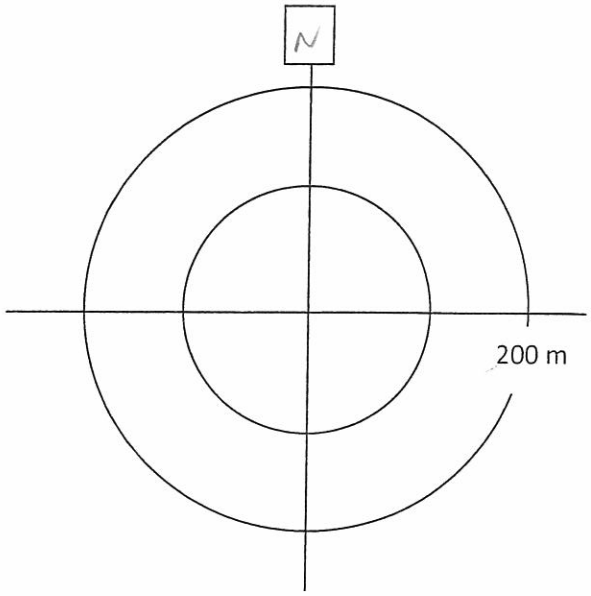

Point Count Name: _____
Waypoint/Unit Number: _____
UTM: _____
Start Time (24 hr) _____
Habitat: _____

ID	Species	Repeat?	0-3 min	4-5 min	Distance (circle)	Direction
					<100, >100, >200 m	
					<100, >100, >200 m	
					<100, >100, >200 m	
					<100, >100, >200 m	
					<100, >100, >200 m	
					<100, >100, >200 m	
					<100, >100, >200 m	
					<100, >100, >200 m	

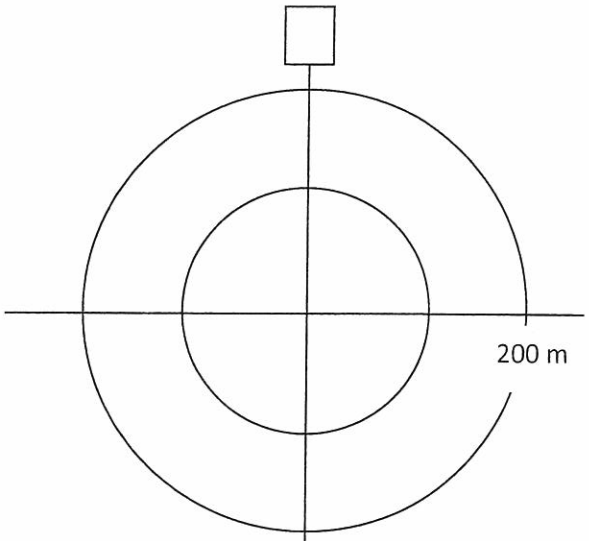

Point Count Name: _____
Waypoint/Unit Number: _____
UTM: _____
Start Time (24 hr) _____
Habitat: _____

ID	Species	Repeat?	0-3 min	4-5 min	Distance (circle)	Direction
					<100, >100, >200 m	
					<100, >100, >200 m	
					<100, >100, >200 m	
					<100, >100, >200 m	
					<100, >100, >200 m	
					<100, >100, >200 m	
					<100, >100, >200 m	
					<100, >100, >200 m	

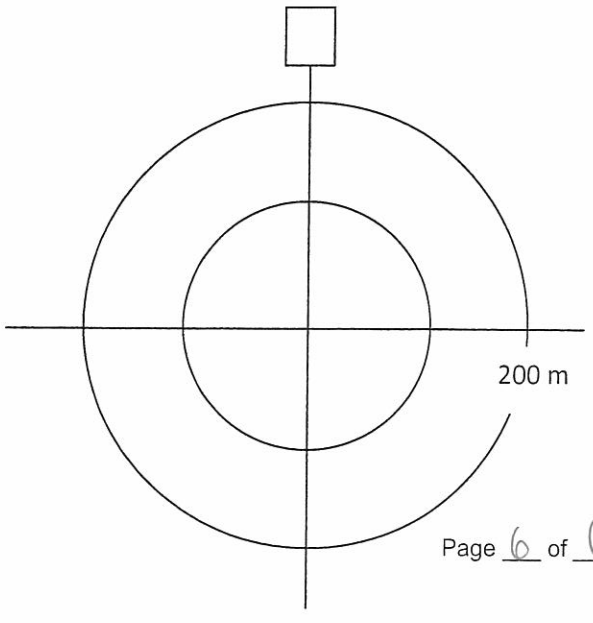

AMEC Earth & Environmental
160 Traders Blvd East, Mississauga, ON L4Z 3K7
Tel: (905) 568-2929
Cell: (416) 459-6228
Fax: (905) 568-1686

Crepuscular Breeding Bird Survey

Project Name: IAMGOLD		**Project Number:** TC121522	
Observers: Jon Pleizier			
Date: June 7, 2013	**Start Time (24hr):** 21:09	**End Time (24hr):** 23:01	**Survey Round:** 1
Weather: 30% cloud.	**Temperature:**	**Wind:** 0	**Precipitation** (Circle): 0 None 1 Trace 2 Rain 3 Before **Count**
Moon Observed?	**Lunar Phase :** (New) • 1st Qtr • Full • 3rd Qtr		

Point Count Name: CB 22
Waypoint/Unit Number:
UTM:
Start Time (24 hr) 21:09
Habitat:

ID	Species	Repeat?	0-3 min	4-5 min	Distance (circle)	Direction
					<100, >100, >200 m	
					<100, >100, >200 m	
					<100, >100, >200 m	
					<100, >100, >200 m	
					<100, >100, >200 m	
					<100, >100, >200 m	
					<100, >100, >200 m	
					<100, >100, >200 m	

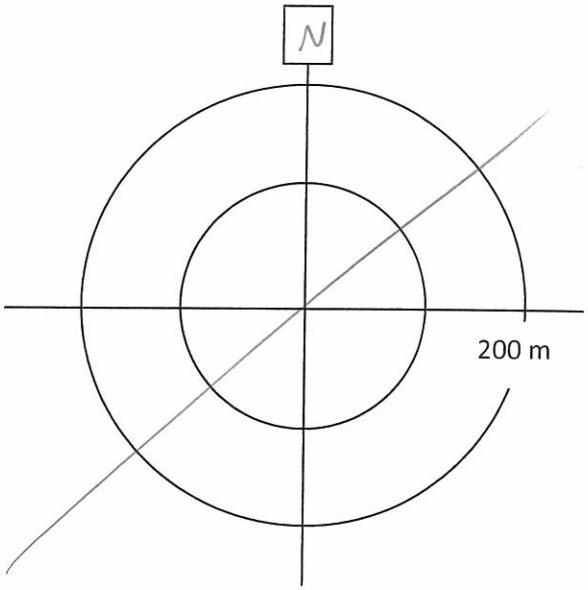

Point Count Name: CB 23
Waypoint/Unit Number:
UTM:
Start Time (24 hr) 21:17
Habitat:

ID	Species	Repeat?	0-3 min	4-5 min	Distance (circle)	Direction
					<100, >100, >200 m	
					<100, >100, >200 m	
					<100, >100, >200 m	
					<100, >100, >200 m	
					<100, >100, >200 m	
					<100, >100, >200 m	
					<100, >100, >200 m	
					<100, >100, >200 m	

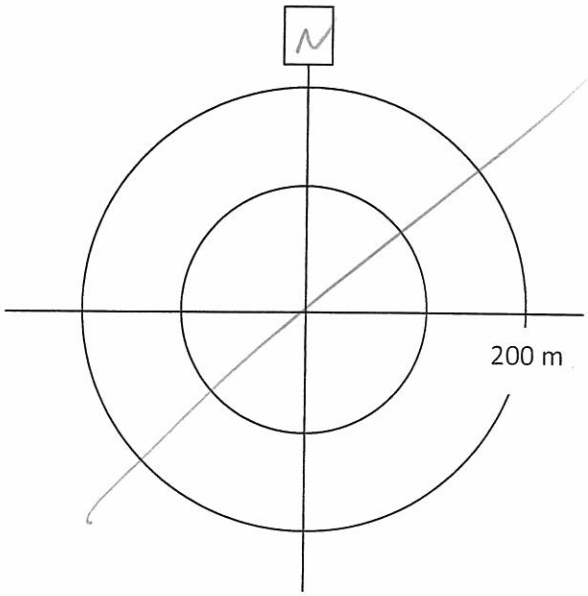

Project Number:
Survey Date:

AMEC Earth & Environmental
160 Traders Blvd East, Mississauga, ON L4Z 3K7
Tel: (905) 568-2929
Cell: (416) 459-6228
Fax: (905) 568-1686

Point Count Name: CB 24
Waypoint/Unit Number:
UTM:
Start Time (24 hr) 21:24
Habitat:

ID	Species	Repeat?	0-3 min	4-5 min	Distance (circle)	Direction
No	crepuscular birds		obs.		<100, >100, >200 m	
					<100, >100, >200 m	
					<100, >100, >200 m	
					<100, >100, >200 m	
					<100, >100, >200 m	
					<100, >100, >200 m	
					<100, >100, >200 m	
					<100, >100, >200 m	

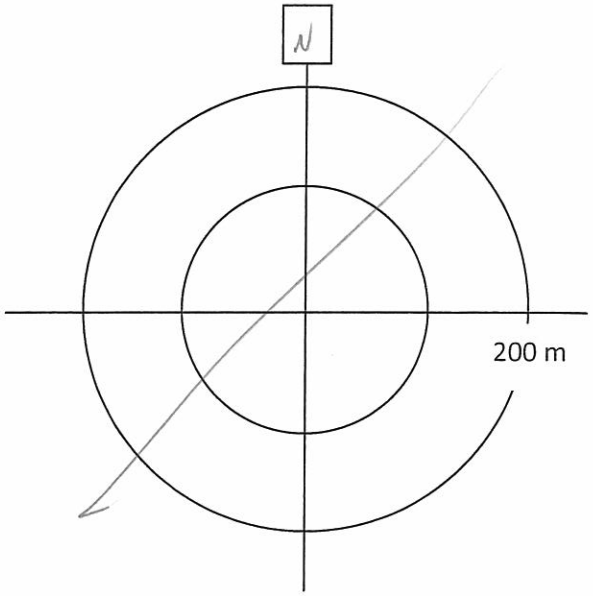

Point Count Name: CB 21
Waypoint/Unit Number:
UTM:
Start Time (24 hr) 21:38
Habitat:

ID	Species	Repeat?	0-3 min	4-5 min	Distance (circle)	Direction
					<100, >100, >200 m	
					<100, >100, >200 m	
					<100, >100, >200 m	
					<100, >100, >200 m	
					<100, >100, >200 m	
					<100, >100, >200 m	
					<100, >100, >200 m	
					<100, >100, >200 m	

SPPE - L3.

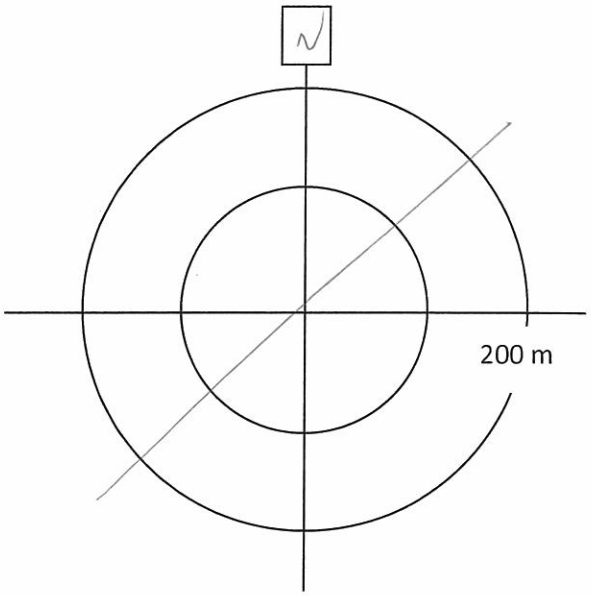

Point Count Name: CB 20
Waypoint/Unit Number:
UTM:
Start Time (24 hr) 21:46
Habitat:

ID	Species	Repeat?	0-3 min	4-5 min	Distance (circle)	Direction
					<100, >100, >200 m	
					<100, >100, >200 m	
					<100, >100, >200 m	
					<100, >100, >200 m	
					<100, >100, >200 m	
					<100, >100, >200 m	
					<100, >100, >200 m	
					<100, >100, >200 m	

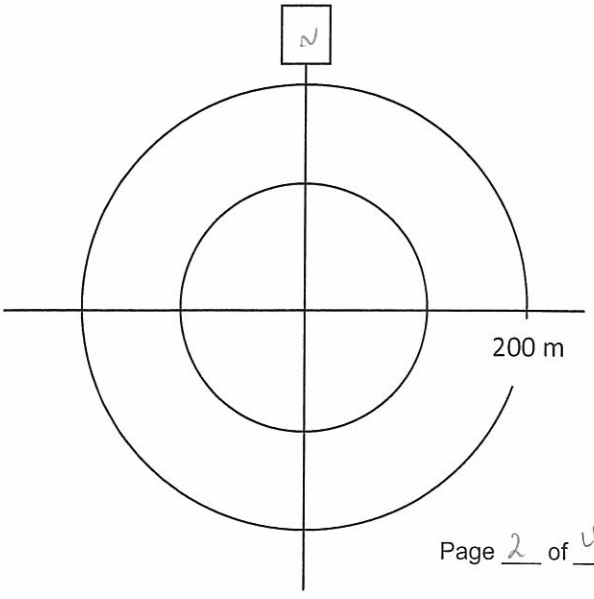

Project Number: TC111504
Survey Date:

AMEC Earth & Environmental
160 Traders Blvd East, Mississauga, ON L4Z 3K7
Tel: (905) 568-2929
Cell: (416) 459-6228
Fax: (905) 568-1686

Point Count Name: CB19
Waypoint/Unit Number:
UTM:
Start Time (24 hr) 21:56
Habitat:

ID	Species	Repeat?	0-3 min	4-5 min	Distance (circle)	Direction
					<100, >100, >200 m	
					<100, >100, >200 m	
					<100, >100, >200 m	
					<100, >100, >200 m	
					<100, >100, >200 m	
					<100, >100, >200 m	
					<100, >100, >200 m	
					<100, >100, >200 m	

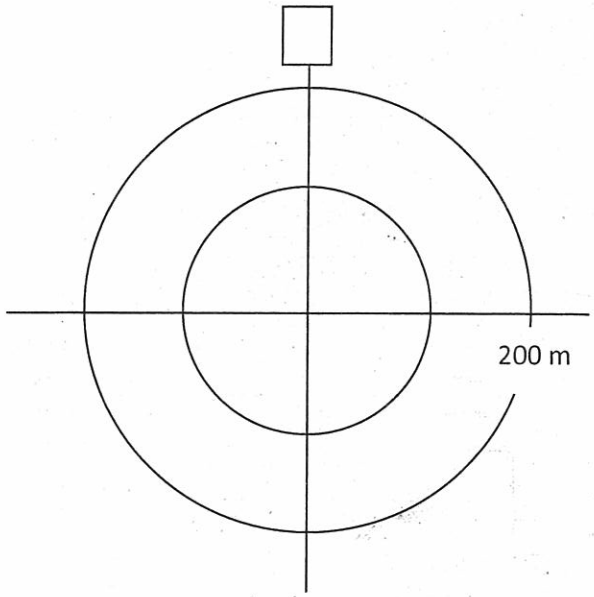

Point Count Name: CB18
Waypoint/Unit Number:
UTM:
Start Time (24 hr) 22:03
Habitat:

ID	Species	Repeat?	0-3 min	4-5 min	Distance (circle)	Direction
					<100, >100, >200 m	
					<100, >100, >200 m	
					<100, >100, >200 m	
					<100, >100, >200 m	
					<100, >100, >200 m	
					<100, >100, >200 m	
					<100, >100, >200 m	
					<100, >100, >200 m	

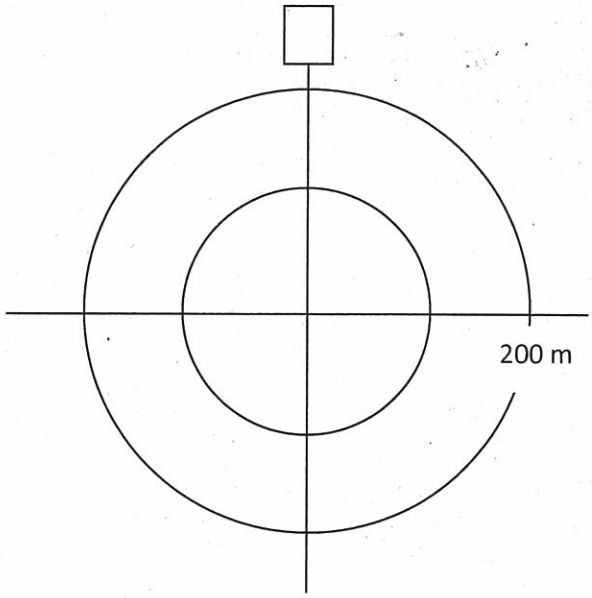

Point Count Name: CB17
Waypoint/Unit Number:
UTM:
Start Time (24 hr) 22:11
Habitat:

ID	Species	Repeat?	0-3 min	4-5 min	Distance (circle)	Direction
					<100, >100, >200 m	
					<100, >100, >200 m	
					<100, >100, >200 m	
					<100, >100, >200 m	
					<100, >100, >200 m	
					<100, >100, >200 m	
					<100, >100, >200 m	
					<100, >100, >200 m	

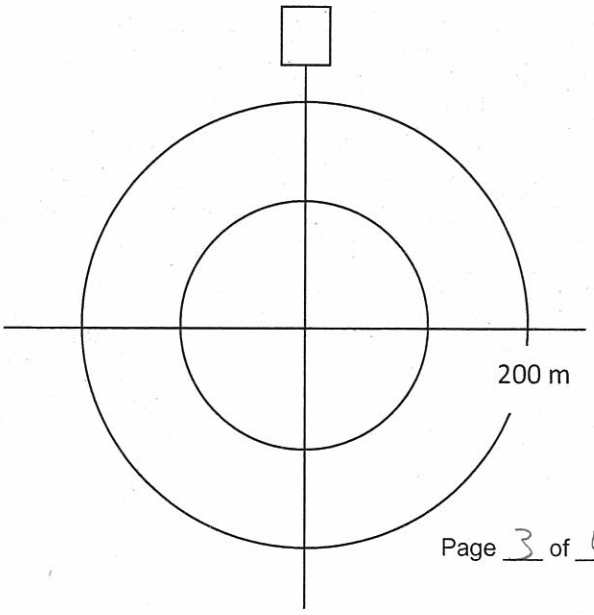

Project Number: TC111504
Survey Date:

AMEC Earth & Environmental
160 Traders Blvd East, Mississauga, ON L4Z 3K7
Tel: (905) 568-2929
Cell: (416) 459-6228
Fax: (905) 568-1686

Point Count Name: CB15
Waypoint/Unit Number:
UTM:
Start Time (24 hr) 22:40
Habitat:

ID	Species	Repeat?	0-3 min	4-5 min	Distance (circle)	Direction
					<100, >100, >200 m	
					<100, >100, >200 m	
					<100, >100, >200 m	
					<100, >100, >200 m	
					<100, >100, >200 m	
					<100, >100, >200 m	
					<100, >100, >200 m	
					<100, >100, >200 m	

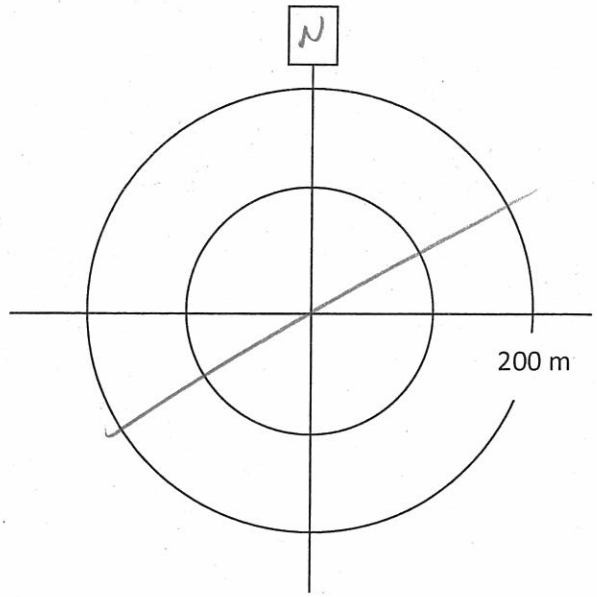

Point Count Name: CB13
Waypoint/Unit Number:
UTM:
Start Time (24 hr) 22:47
Habitat:

ID	Species	Repeat?	0-3 min	4-5 min	Distance (circle)	Direction
					<100, >100, >200 m	
					<100, >100, >200 m	
					<100, >100, >200 m	
					<100, >100, >200 m	
					<100, >100, >200 m	
					<100, >100, >200 m	
					<100, >100, >200 m	
					<100, >100, >200 m	

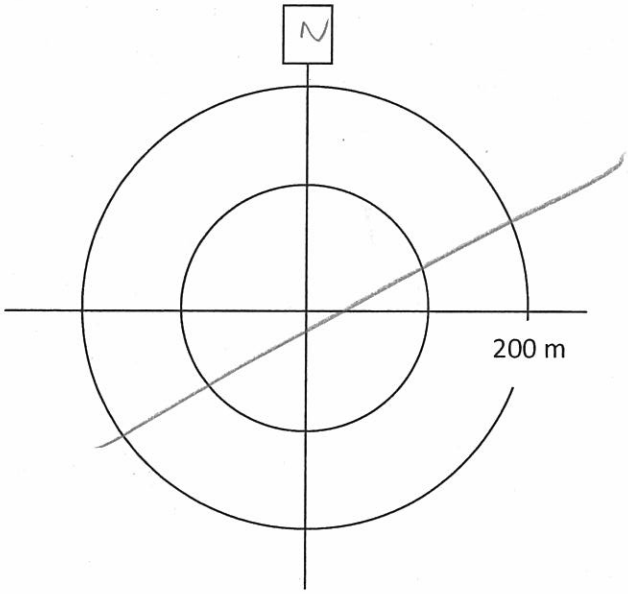

Point Count Name: CB12
Waypoint/Unit Number:
UTM:
Start Time (24 hr) 22:55
Habitat:

ID	Species	Repeat?	0-3 min	4-5 min	Distance (circle)	Direction
					<100, >100, >200 m	
					<100, >100, >200 m	
					<100, >100, >200 m	
					<100, >100, >200 m	
					<100, >100, >200 m	
					<100, >100, >200 m	
					<100, >100, >200 m	
					<100, >100, >200 m	

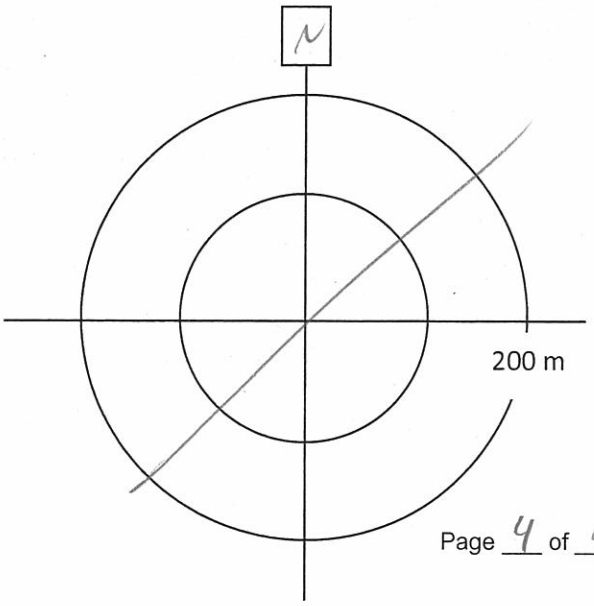

AMEC Earth & Environmental
160 Traders Blvd East, Mississauga, ON L4Z 3K7
Tel: (905) 568-2929
Cell: (416) 459-6228
Fax: (905) 568-1686

Crepuscular Breeding Bird Survey

Project Name: IAMGOLD		Project Number: TC121522	
Observers: Jon Pleizier			
Date: June 8, 2013	Start Time (24hr): 20:57	End Time (24hr): 23:15	Survey Round: 1
Weather: 10% cloud	Temperature: 19°C	Wind:	Precipitation (Circle): 0 None 1 Trace 2 Rain 3 Before Count
Moon Observed? No	Lunar Phase : (New) • 1st Qtr • Full • 3rd Qtr		

Point Count Name: _____
Waypoint/Unit Number: 118 (E414)
UTM: 17U 461013, 5329393
Start Time (24 hr) 20:57
Habitat: _____

ID	Species	Repeat?	0-3 min	4-5 min	Distance (circle)	Direction
					<100, >100, >200 m	
					<100, >100, >200 m	
					<100, >100, >200 m	
					<100, >100, >200 m	
					<100, >100, >200 m	
					<100, >100, >200 m	
					<100, >100, >200 m	
					<100, >100, >200 m	

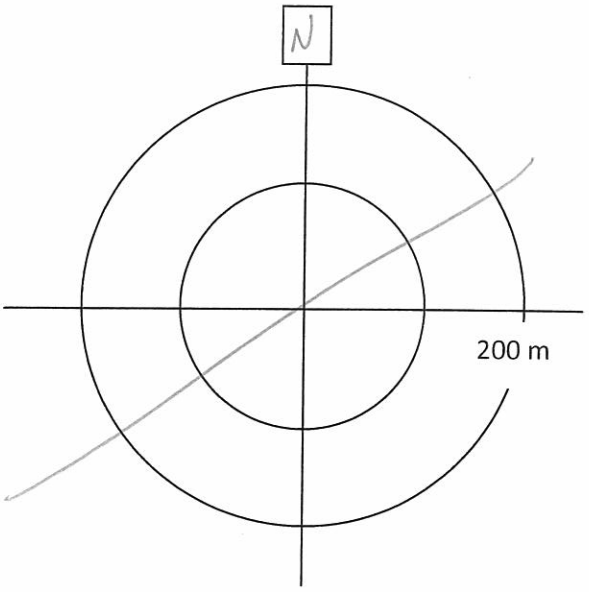

Point Count Name: _____
Waypoint/Unit Number: 119 (E414)
UTM: _____
Start Time (24 hr) 21:10
Habitat: _____

ID	Species	Repeat?	0-3 min	4-5 min	Distance (circle)	Direction
					<100, >100, >200 m	
					<100, >100, >200 m	
					<100, >100, >200 m	
					<100, >100, >200 m	
					<100, >100, >200 m	
					<100, >100, >200 m	
					<100, >100, >200 m	
					<100, >100, >200 m	

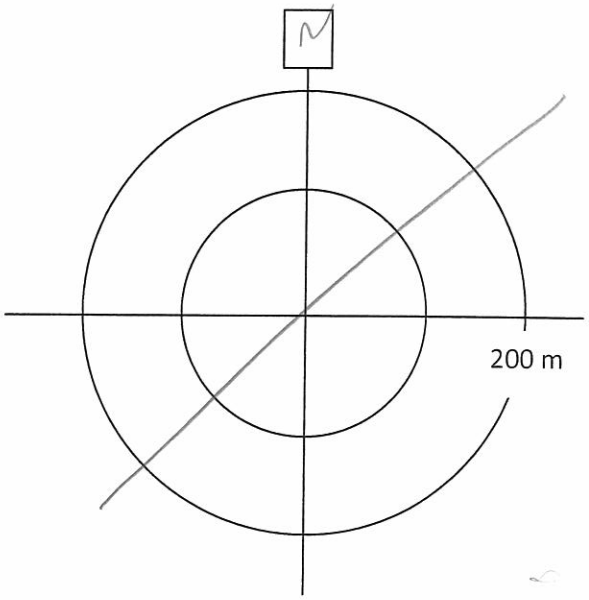

Project Number:
Survey Date:

AMEC Earth & Environmental
160 Traders Blvd East, Mississauga, ON L4Z 3K7
Tel: (905) 568-2929
Cell: (416) 459-6228
Fax: (905) 568-1686

Point Count Name: CB 29
Waypoint/Unit Number: 122 (E414)
UTM: 17U 459822, 5339003
Start Time (24 hr) 21:22
Habitat:

ID	Species	Repeat?	0-3 min	4-5 min	Distance (circle)	Direction
					<100, >100, >200 m	
					<100, >100, >200 m	
					<100, >100, >200 m	
					<100, >100, >200 m	
					<100, >100, >200 m	
					<100, >100, >200 m	
					<100, >100, >200 m	
					<100, >100, >200 m	

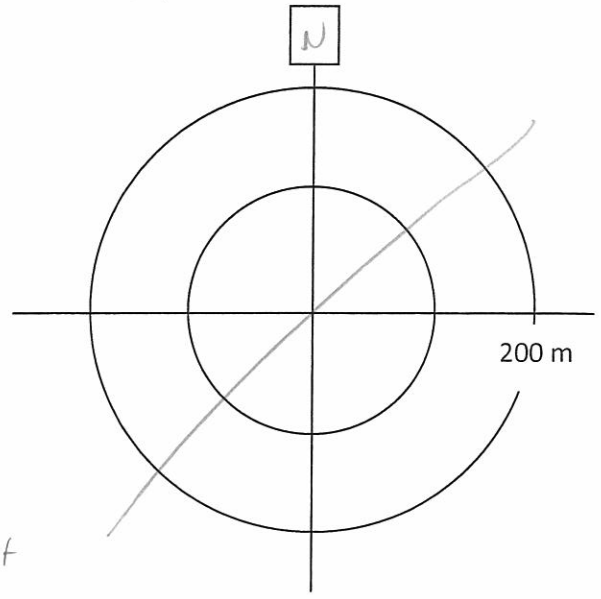

wpt 120 – RTHA nesting White Pine - adults at nest.

Point Count Name: CB 30
Waypoint/Unit Number: 123
UTM: 17U 459848, 5337840
Start Time (24 hr) 21:38
Habitat:

ID	Species	Repeat?	0-3 min	4-5 min	Distance (circle)	Direction
					<100, >100, >200 m	
					<100, >100, >200 m	
					<100, >100, >200 m	
					<100, >100, >200 m	
					<100, >100, >200 m	
					<100, >100, >200 m	
					<100, >100, >200 m	
					<100, >100, >200 m	

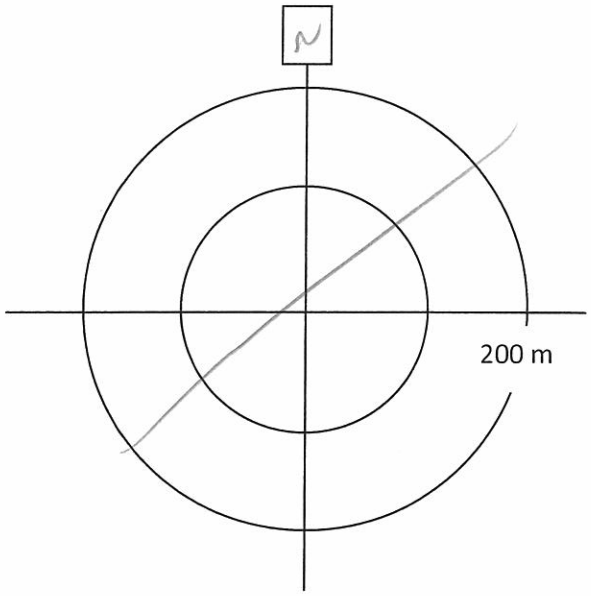

SPPE-L3, 1 Toad (AMTO), RESQ, MOWA

Point Count Name: CB 31
Waypoint/Unit Number: 124 (E414)
UTM: 17U 459867, 5336940
Start Time (24 hr) 21:49
Habitat:

ID	Species	Repeat?	0-3 min	4-5 min	Distance (circle)	Direction
					<100, >100, >200 m	
					<100, >100, >200 m	
					<100, >100, >200 m	
					<100, >100, >200 m	
					<100, >100, >200 m	
					<100, >100, >200 m	
					<100, >100, >200 m	
					<100, >100, >200 m	

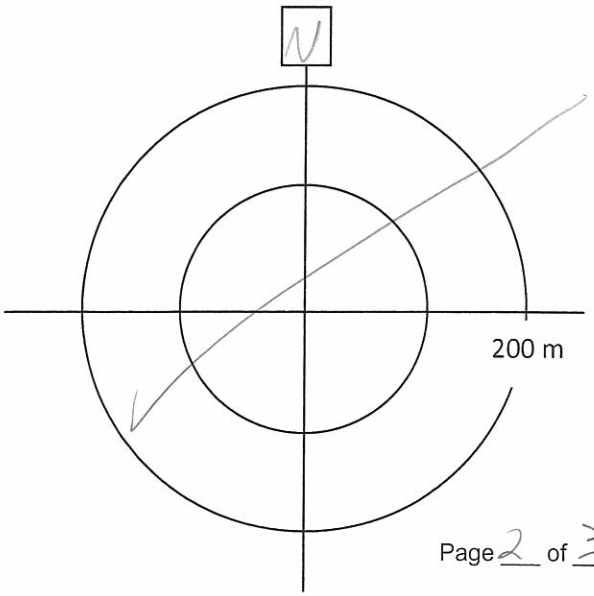

Project Number: TC111504
Survey Date:

AMEC Earth & Environmental
160 Traders Blvd East, Mississauga, ON L4Z 3K7
Tel: (905) 568-2929
Cell: (416) 459-6228
Fax: (905) 568-1686

Point Count Name: CB34
Waypoint/Unit Number: _____
UTM: 2
Start Time (24 hr) 22:02
Habitat: _____

ID	Species	Repeat?	0-3 min	4-5 min	Distance (circle)	Direction
					<100, >100, >200 m	
					<100, >100, >200 m	
					<100, >100, >200 m	
					<100, >100, >200 m	
					<100, >100, >200 m	
					<100, >100, >200 m	
					<100, >100, >200 m	
					<100, >100, >200 m	

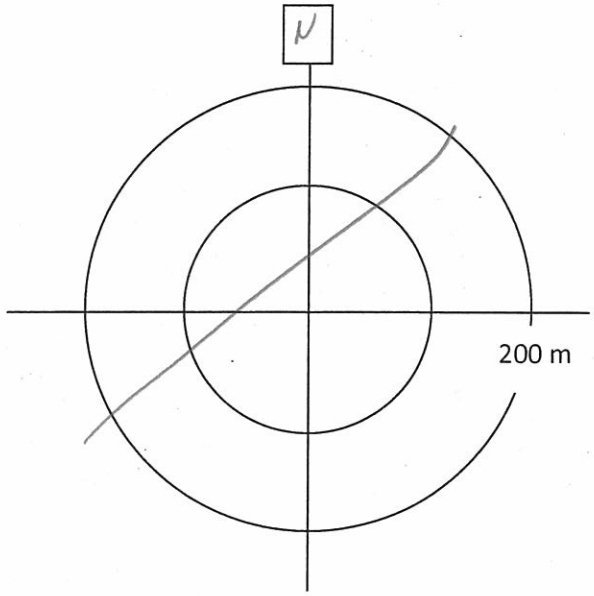

Point Count Name: CB11
Waypoint/Unit Number: _____
UTM: _____
Start Time (24 hr) 23:02
Habitat: _____

ID	Species	Repeat?	0-3 min	4-5 min	Distance (circle)	Direction
					<100, >100, >200 m	
					<100, >100, >200 m	
					<100, >100, >200 m	
					<100, >100, >200 m	
					<100, >100, >200 m	
					<100, >100, >200 m	
					<100, >100, >200 m	
					<100, >100, >200 m	

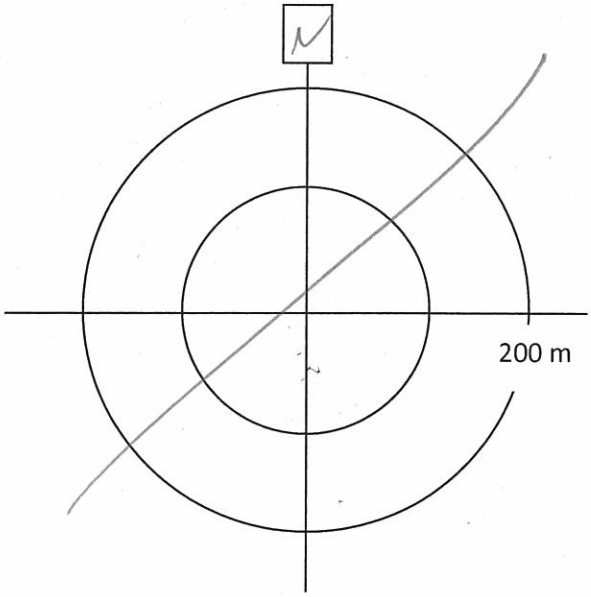

Point Count Name: CB10
Waypoint/Unit Number: _____
UTM: _____
Start Time (24 hr) 23:09
Habitat: _____

ID	Species	Repeat?	0-3 min	4-5 min	Distance (circle)	Direction
					<100, >100, >200 m	
					<100, >100, >200 m	
					<100, >100, >200 m	
					<100, >100, >200 m	
					<100, >100, >200 m	
					<100, >100, >200 m	
					<100, >100, >200 m	
					<100, >100, >200 m	

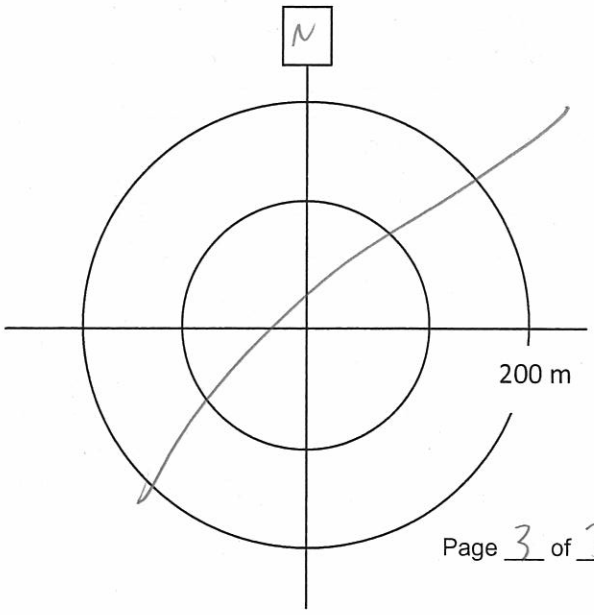

AMEC Earth & Environmental
160 Traders Blvd East, Mississauga, ON L4Z 3K7
Tel: (905) 568-2929
Cell: (416) 459-6228
Fax: (905) 568-1686

Crepuscular Breeding Bird Survey

Project Name: IMG		Project Number: TC121522	
Observers: J. BALSDON			
Date: JUNE 18, 2013	Start Time (24hr): 2156	End Time (24hr): 23:28	Survey Round: 2
Weather: CLEAR,	Temperature:	Wind: 1	Precipitation (Circle): (0) None 1 Trace 2 Rain 3 Before Count
Moon Observed?	Lunar Phase : New • 1st Qtr • Full • 3rd Qtr		

Point Count Name: CB62
Waypoint/Unit Number: _____
UTM: _____
Start Time (24 hr) 2156
Habitat: _____

ID	Species	Repeat?	0-3 min	4-5 min	Distance (circle)	Direction
—	—	—	—	—	<100, >100, >200 m	—
					<100, >100, >200 m	
					<100, >100, >200 m	
					<100, >100, >200 m	
					<100, >100, >200 m	
					<100, >100, >200 m	
					<100, >100, >200 m	
					<100, >100, >200 m	

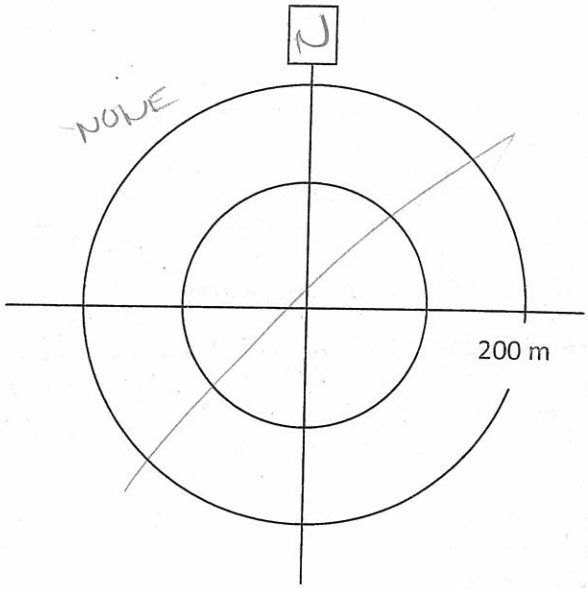

Point Count Name: CB63
Waypoint/Unit Number: _____
UTM: _____
Start Time (24 hr) 2204 hrs
Habitat: _____

ID	Species	Repeat?	0-3 min	4-5 min	Distance (circle)	Direction
—	—	—	—	—	<100, >100, >200 m	—
					<100, >100, >200 m	
					<100, >100, >200 m	
					<100, >100, >200 m	
					<100, >100, >200 m	
					<100, >100, >200 m	
					<100, >100, >200 m	
					<100, >100, >200 m	

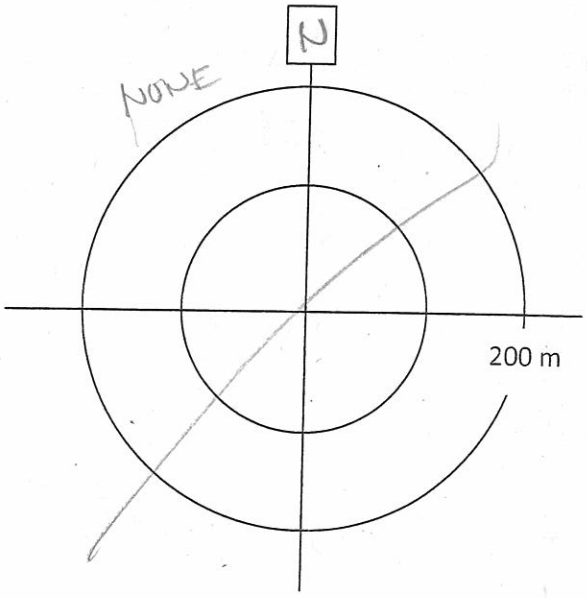

Project Number: TC121522
Survey Date: JUNE 18, 2013

AMEC Earth & Environmental
160 Traders Blvd East, Mississauga, ON L4Z 3K7
Tel: (905) 568-2929
Cell: (416) 459-6228
Fax: (905) 568-1686

Point Count Name: CB64
Waypoint/Unit Number: _____
UTM: _____
Start Time (24 hr) 2212 hrs
Habitat: _____

ID	Species	Repeat?	0-3 min	4-5 min	Distance (circle)	Direction
—	—	—	—	—	<100, >100, >200 m	—
					<100, >100, >200 m	
					<100, >100, >200 m	
					<100, >100, >200 m	
					<100, >100, >200 m	
					<100, >100, >200 m	
					<100, >100, >200 m	
					<100, >100, >200 m	

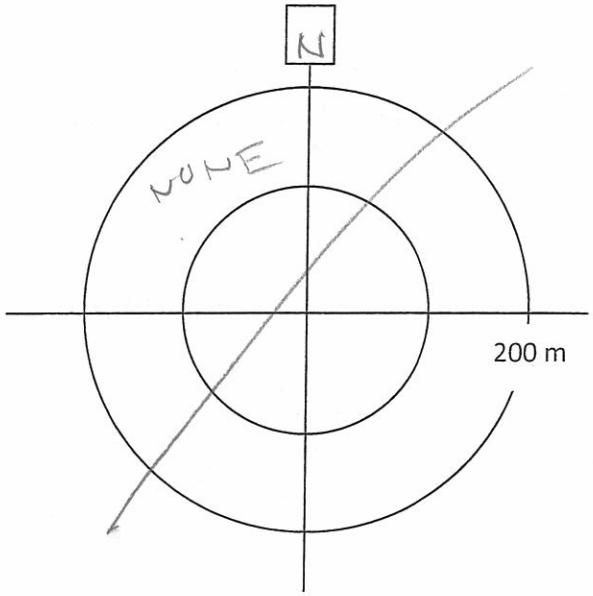

Point Count Name: CB65
Waypoint/Unit Number: _____
UTM: _____
Start Time (24 hr) 2220
Habitat: _____

ID	Species	Repeat?	0-3 min	4-5 min	Distance (circle)	Direction
—	—	—	—	—	<100, >100, >200 m	—
					<100, >100, >200 m	
					<100, >100, >200 m	
					<100, >100, >200 m	
					<100, >100, >200 m	
					<100, >100, >200 m	
					<100, >100, >200 m	
					<100, >100, >200 m	

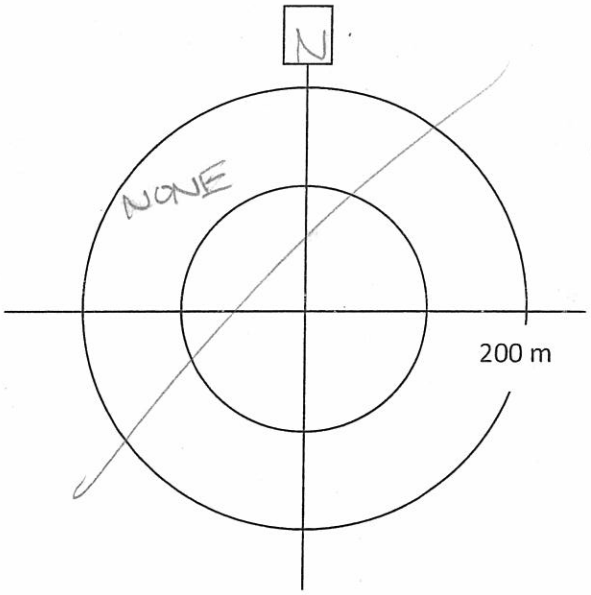

Point Count Name: CB66
Waypoint/Unit Number: _____
UTM: _____
Start Time (24 hr) 2228
Habitat: _____

ID	Species	Repeat?	0-3 min	4-5 min	Distance (circle)	Direction
—	—	—	—	—	<100, >100, >200 m	—
					<100, >100, >200 m	
					<100, >100, >200 m	
					<100, >100, >200 m	
					<100, >100, >200 m	
					<100, >100, >200 m	
					<100, >100, >200 m	
					<100, >100, >200 m	

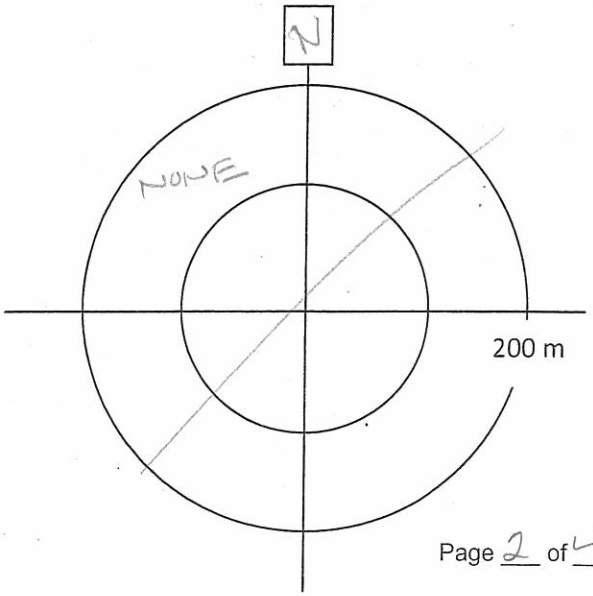

Project Number: ~~TC111504~~ TC121522
Survey Date: JUNE 18, 2013

AMEC Earth & Environmental
160 Traders Blvd East, Mississauga, ON L4Z 3K7
Tel: (905) 568-2929
Cell: (416) 459-6228
Fax: (905) 568-1686

Point Count Name: CC67
Waypoint/Unit Number: _____
UTM: _____
Start Time (24 hr) 2238
Habitat: _____

ID	Species	Repeat?	0-3 min	4-5 min	Distance (circle)	Direction
1	CONI	NO	✓		<100, >100, >200 m	SSE
					<100, >100, >200 m	
					<100, >100, >200 m	
					<100, >100, >200 m	
					<100, >100, >200 m	
					<100, >100, >200 m	
					<100, >100, >200 m	
					<100, >100, >200 m	

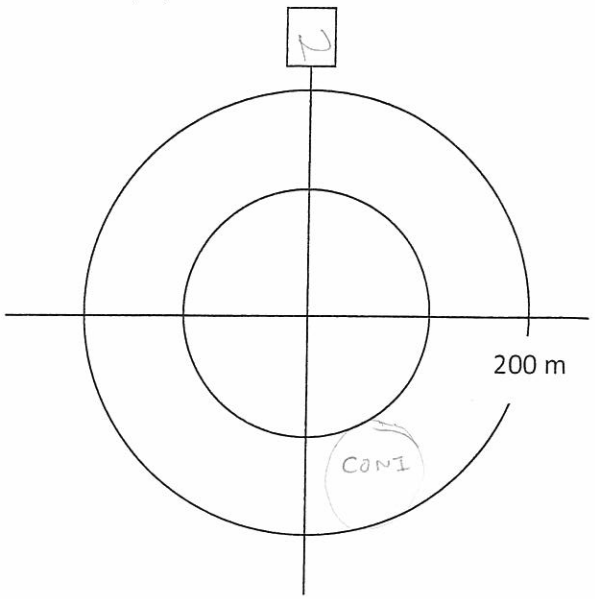

Point Count Name: CC68
Waypoint/Unit Number: _____
UTM: _____
Start Time (24 hr) 2250
Habitat: _____

ID	Species	Repeat?	0-3 min	4-5 min	Distance (circle)	Direction
–	–	–	–	–	<100, >100, >200 m	–
					<100, >100, >200 m	
					<100, >100, >200 m	
					<100, >100, >200 m	
					<100, >100, >200 m	
					<100, >100, >200 m	
					<100, >100, >200 m	
					<100, >100, >200 m	

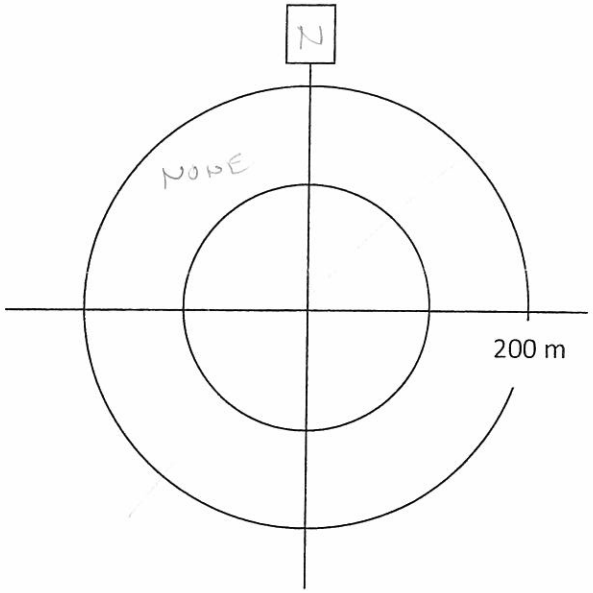

Point Count Name: CC69
Waypoint/Unit Number: _____
UTM: _____
Start Time (24 hr) 2301
Habitat: _____

ID	Species	Repeat?	0-3 min	4-5 min	Distance (circle)	Direction
					<100, >100, >200 m	
					<100, >100, >200 m	
					<100, >100, >200 m	
					<100, >100, >200 m	
					<100, >100, >200 m	
					<100, >100, >200 m	
					<100, >100, >200 m	
					<100, >100, >200 m	

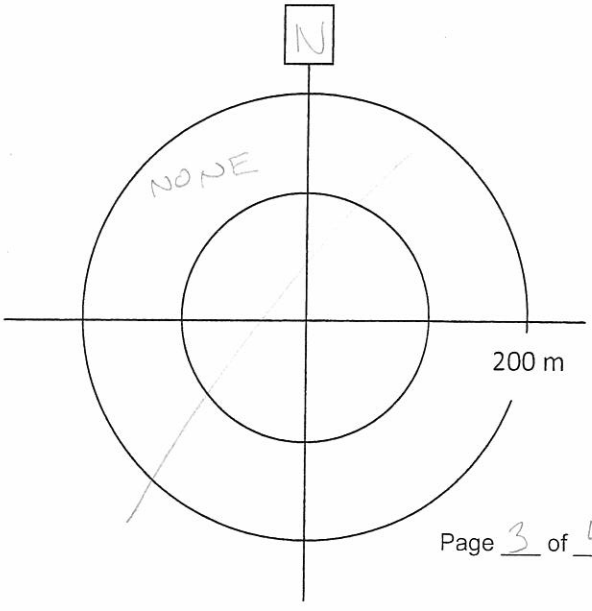

Project Number: ~~TC111504~~ TC121522
Survey Date: JUNE 18, 2013

AMEC Earth & Environmental
160 Traders Blvd East, Mississauga, ON L4Z 3K7
Tel: (905) 568-2929
Cell: (416) 459-6228
Fax: (905) 568-1686

Point Count Name: CB70
Waypoint/Unit Number: _____
UTM: _____
Start Time (24 hr) 2311
Habitat: _____

ID	Species	Repeat?	0-3 min	4-5 min	Distance (circle)	Direction
					<100, >100, >200 m	
					<100, >100, >200 m	
					<100, >100, >200 m	
					<100, >100, >200 m	
					<100, >100, >200 m	
					<100, >100, >200 m	
					<100, >100, >200 m	
					<100, >100, >200 m	

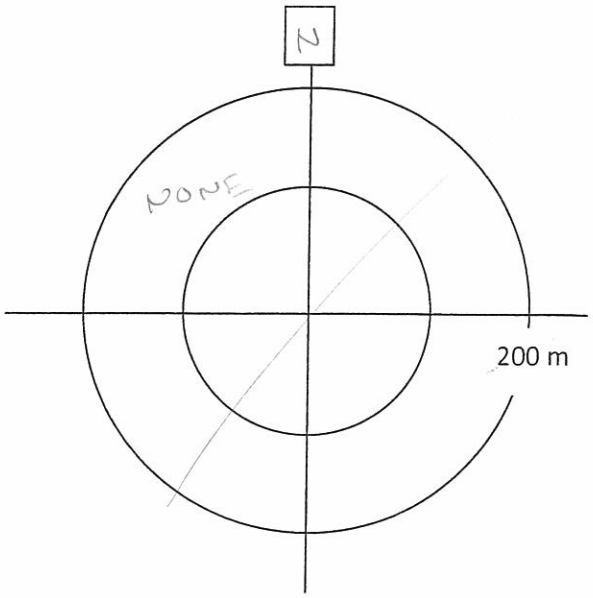

Point Count Name: CB71
Waypoint/Unit Number: _____
UTM: _____
Start Time (24 hr) 2322
Habitat: _____

ID	Species	Repeat?	0-3 min	4-5 min	Distance (circle)	Direction
					<100, >100, >200 m	
					<100, >100, >200 m	
					<100, >100, >200 m	
					<100, >100, >200 m	
					<100, >100, >200 m	
					<100, >100, >200 m	
					<100, >100, >200 m	
					<100, >100, >200 m	

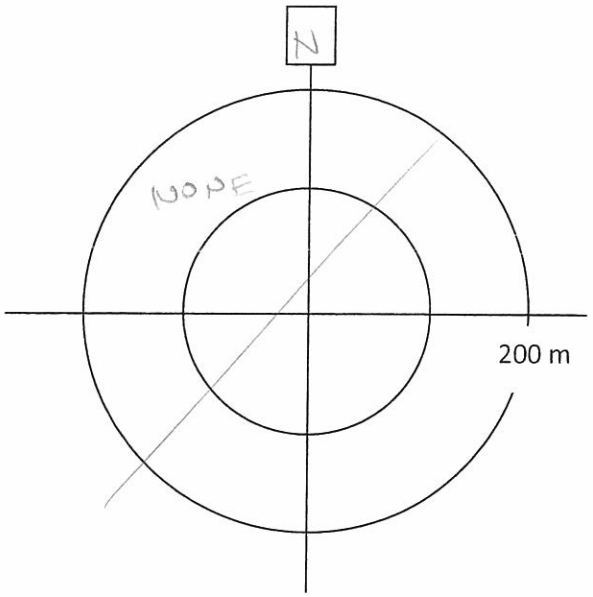

Point Count Name: _____
Waypoint/Unit Number: _____
UTM: _____
Start Time (24 hr) _____
Habitat: _____

ID	Species	Repeat?	0-3 min	4-5 min	Distance (circle)	Direction
					<100, >100, >200 m	
					<100, >100, >200 m	
					<100, >100, >200 m	
					<100, >100, >200 m	
					<100, >100, >200 m	
					<100, >100, >200 m	
					<100, >100, >200 m	
					<100, >100, >200 m	

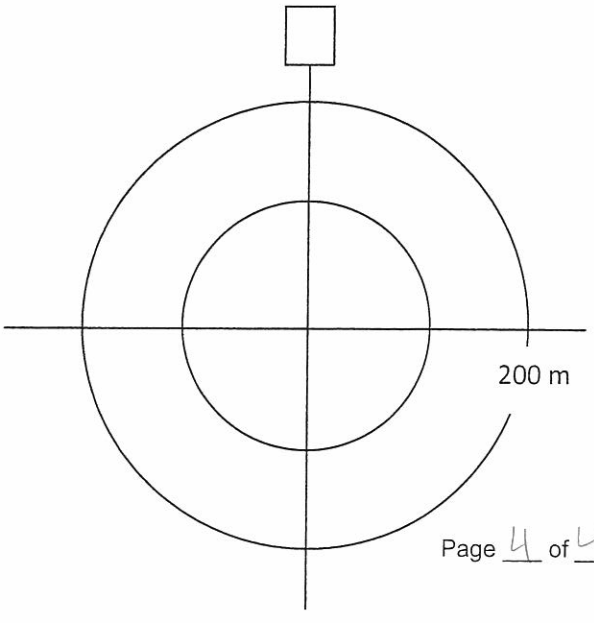

(1)

AMEC Earth & Environmental
160 Traders Blvd East, Mississauga, ON L4Z 3K7
Tel: (905) 568-2929
Cell: (416) 459-6228
Fax: (905) 568-1686

Crepuscular Breeding Bird Survey

Project Name: IMG		**Project Number:** TC121522	
Observers: ME			
Date: June 18 / 2013	**Start Time (24hr):** 21:20	**End Time (24hr):** 24:00 / 1:00 June 19	**Survey Round:** 2
Weather: Clear / Calm	**Temperature:** 15°C	**Wind:** 0	**Precipitation** (Circle): 0 None 1 Trace 2 Rain 3 Before **Count**
Moon Observed? Yes	**Lunar Phase :** New • (1st Qtr) • Full • 3rd Qtr		

Point Count Name: CB72
Waypoint/Unit Number: _____
UTM: _____
Start Time (24 hr) 21:20
Habitat: Mixed

ID	Species	Repeat?	0-3 min	4-5 min	Distance (circle)	Direction
	Ø				<100, >100, >200 m	
					<100, >100, >200 m	
					<100, >100, >200 m	
					<100, >100, >200 m	
					<100, >100, >200 m	
					<100, >100, >200 m	
					<100, >100, >200 m	
					<100, >100, >200 m	

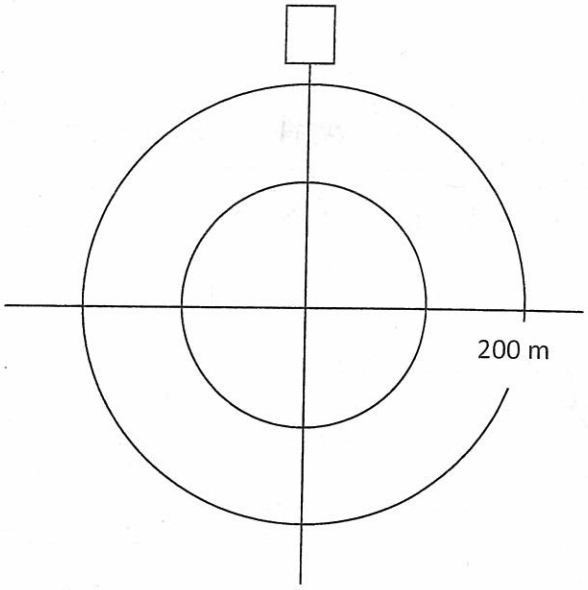

Point Count Name: CB72
Waypoint/Unit Number: _____
UTM: _____
Start Time (24 hr) 21:55
Habitat: _____

ID	Species	Repeat?	0-3 min	4-5 min	Distance (circle)	Direction
	Ø				<100, >100, >200 m	
					<100, >100, >200 m	
					<100, >100, >200 m	
					<100, >100, >200 m	
					<100, >100, >200 m	
					<100, >100, >200 m	
					<100, >100, >200 m	
					<100, >100, >200 m	

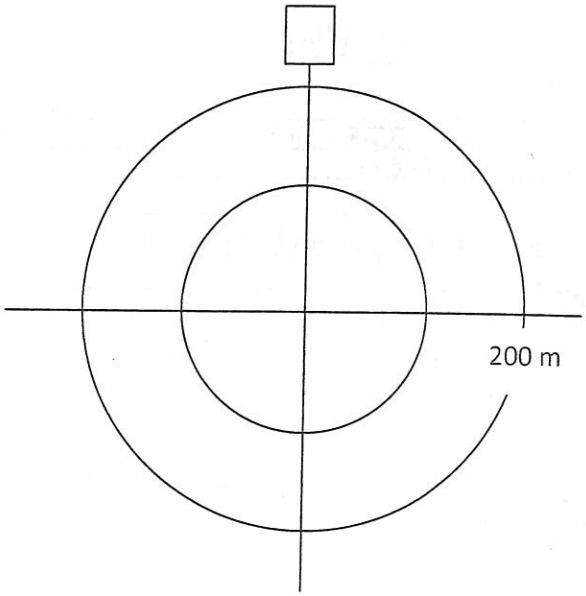

(2)

Project Number:
Survey Date:

AMEC Earth & Environmental
160 Traders Blvd East, Mississauga, ON L4Z 3K7
Tel: (905) 568-2929
Cell: (416) 459-6228
Fax: (905) 568-1686

Point Count Name: _____
Waypoint/Unit Number: 001
UTM: _____
Start Time (24 hr) 22:08
Habitat: clear cut - regen.

ID	Species	Repeat?	0-3 min	4-5 min	Distance (circle)	Direction
	Ø				<100, >100, >200 m	
					<100, >100, >200 m	
					<100, >100, >200 m	
					<100, >100, >200 m	
					<100, >100, >200 m	
					<100, >100, >200 m	
					<100, >100, >200 m	
					<100, >100, >200 m	

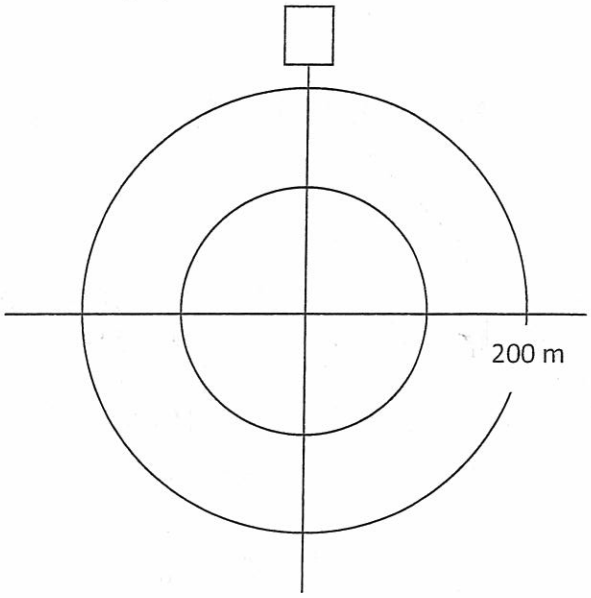

Point Count Name: 011
Waypoint/Unit Number: ~~011~~ - John's # near CB79 by Hwy 144
UTM: _____
Start Time (24 hr) 21:20
Habitat: Hwy - mixed

ID	Species	Repeat?	0-3 min	4-5 min	Distance (circle)	Direction
	Ø				<100, >100, >200 m	
					<100, >100, >200 m	
					<100, >100, >200 m	
					<100, >100, >200 m	
					<100, >100, >200 m	
					<100, >100, >200 m	
					<100, >100, >200 m	
					<100, >100, >200 m	

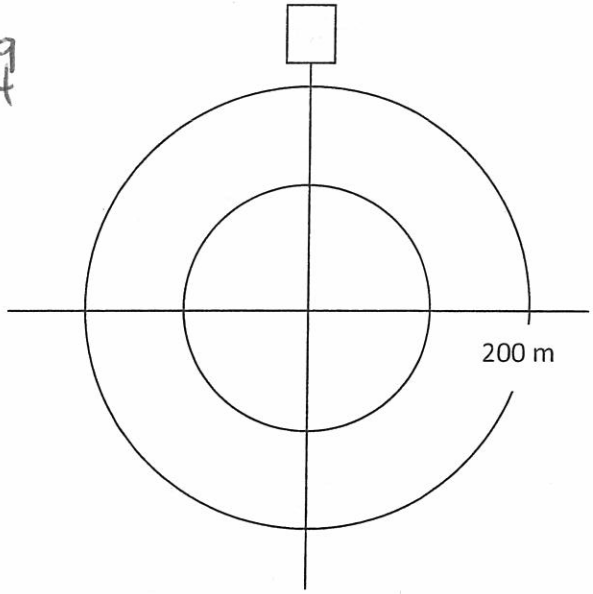

Point Count Name: CB80
Waypoint/Unit Number: _____
UTM: _____
Start Time (24 hr) ~~22~~:30
Habitat: mixed -.

ID	Species	Repeat?	0-3 min	4-5 min	Distance (circle)	Direction
	Ø				<100, >100, >200 m	
					<100, >100, >200 m	
					<100, >100, >200 m	
					<100, >100, >200 m	
					<100, >100, >200 m	
					<100, >100, >200 m	
					<100, >100, >200 m	
					<100, >100, >200 m	

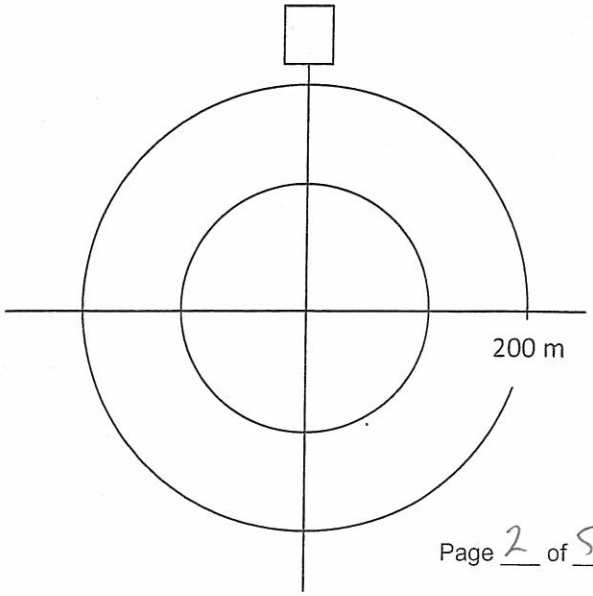

AMEC Earth & Environmental
160 Traders Blvd East, Mississauga, ON L4Z 3K7
Tel: (905) 568-2929
Cell: (416) 459-6228
Fax: (905) 568-1686

Crepuscular Breeding Bird Survey

Project Name:		Project Number:	
Observers:			
Date:	Start Time (24hr):	End Time (24hr):	Survey Round:
Weather:	Temperature:	Wind:	Precipitation (Circle): 0 None 1 Trace 2 Rain 3 Before Count
Moon Observed?	Lunar Phase: New • 1st Qtr • Full • 3rd Qtr		

Point Count Name: 0113
Waypoint/Unit Number: _____
UTM: _____
Start Time (24 hr) 22~~4~~:41
Habitat: Hwy 144

ID	Species	Repeat?	0-3 min	4-5 min	Distance (circle)	Direction
					<100, >100, >200 m	
	Ø				<100, >100, >200 m	
					<100, >100, >200 m	
					<100, >100, >200 m	
					<100, >100, >200 m	
					<100, >100, >200 m	
					<100, >100, >200 m	
					<100, >100, >200 m	

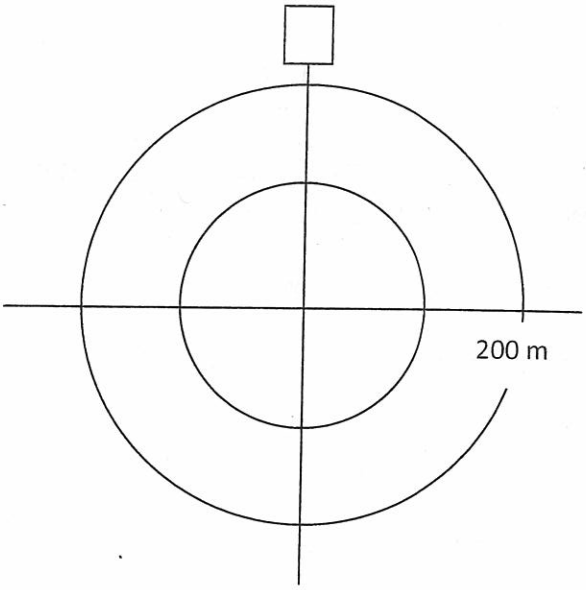

Point Count Name: 012
Waypoint/Unit Number: _____
UTM: _____
Start Time (24 hr) 22~~4~~:54
Habitat: _____

ID	Species	Repeat?	0-3 min	4-5 min	Distance (circle)	Direction
					<100, >100, >200 m	
	Ø				<100, >100, >200 m	
					<100, >100, >200 m	
					<100, >100, >200 m	
					<100, >100, >200 m	
					<100, >100, >200 m	
					<100, >100, >200 m	
					<100, >100, >200 m	

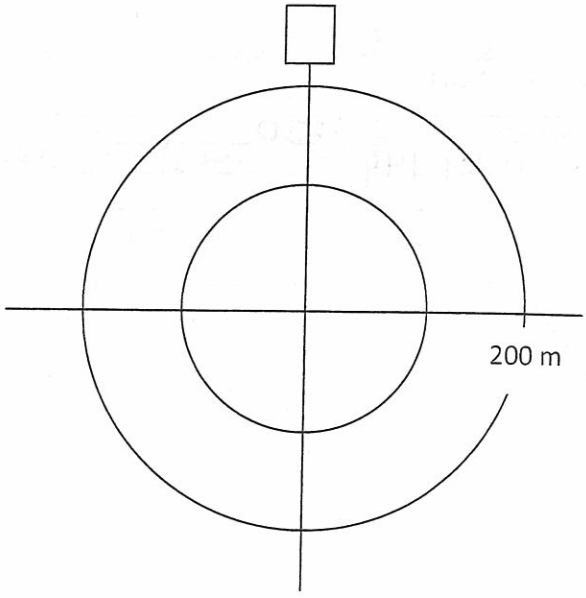

Project Number:
Survey Date:

AMEC Earth & Environmental
160 Traders Blvd East, Mississauga, ON L4Z 3K7
Tel: (905) 568-2929
Cell: (416) 459-6228
Fax: (905) 568-1686

Point Count Name: CB84
Waypoint/Unit Number:
UTM:
Start Time (24 hr) ~~22:05~~ 23:05
Habitat: Mixed

ID	Species	Repeat?	0-3 min	4-5 min	Distance (circle)	Direction
	Ø				<100, >100, >200 m	
					<100, >100, >200 m	
					<100, >100, >200 m	
					<100, >100, >200 m	
					<100, >100, >200 m	
					<100, >100, >200 m	
					<100, >100, >200 m	
					<100, >100, >200 m	

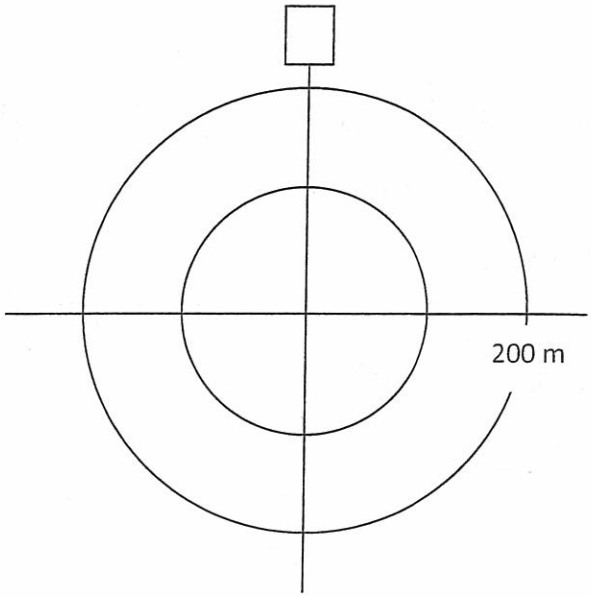

Point Count Name: CB83
Waypoint/Unit Number:
UTM:
Start Time (24 hr) ~~22:15~~ 23:15
Habitat: clear cut - regen.

ID	Species	Repeat?	0-3 min	4-5 min	Distance (circle)	Direction
	Ø				<100, >100, >200 m	
					<100, >100, >200 m	
					<100, >100, >200 m	
					<100, >100, >200 m	
					<100, >100, >200 m	
					<100, >100, >200 m	
					<100, >100, >200 m	
					<100, >100, >200 m	

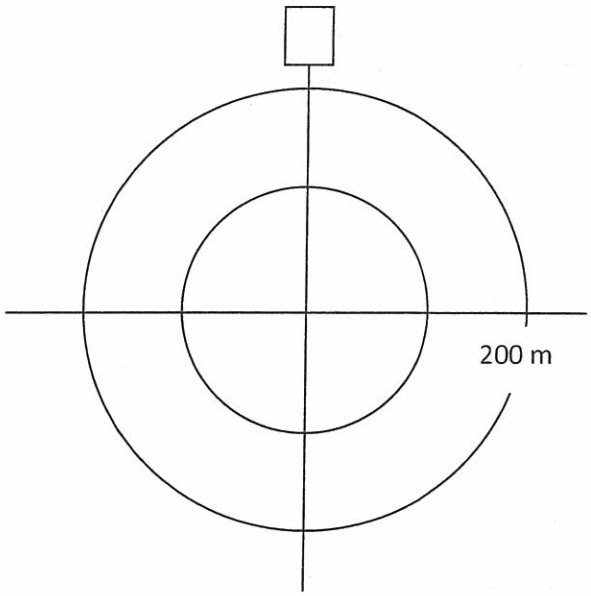

Point Count Name: CB86
Waypoint/Unit Number:
UTM:
Start Time (24 hr) 23:30
Habitat: HWY 144 - marsh/open

ID	Species	Repeat?	0-3 min	4-5 min	Distance (circle)	Direction
	Ø				<100, >100, >200 m	
					<100, >100, >200 m	
					<100, >100, >200 m	
					<100, >100, >200 m	
					<100, >100, >200 m	
					<100, >100, >200 m	
					<100, >100, >200 m	
					<100, >100, >200 m	

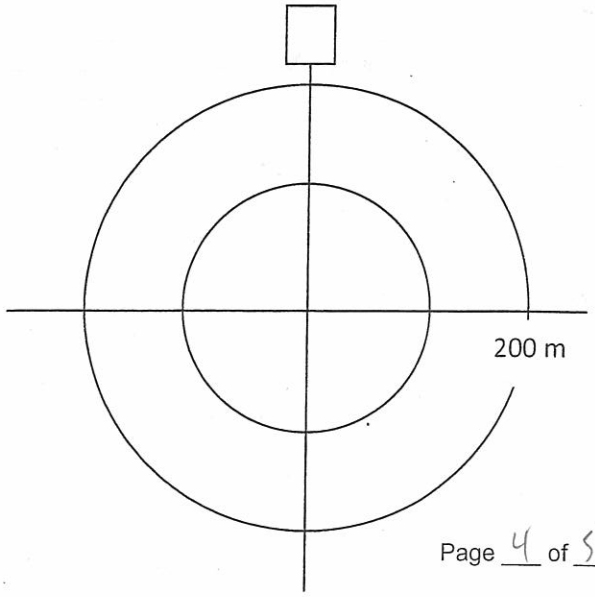

Project Number: ~~JC011150~~
Survey Date:

AMEC Earth & Environmental
160 Traders Blvd East, Mississauga, ON L4Z 3K7
Tel: (905) 568-2929
Cell: (416) 459-6228
Fax: (905) 568-1686

Point Count Name: CB87
Waypoint/Unit Number:
UTM:
Start Time (24 hr) 23:39
Habitat: Mixed - IMG camp road

ID	Species	Repeat?	0-3 min	4-5 min	Distance (circle)	Direction
	Ø				<100, >100, >200 m	
					<100, >100, >200 m	
					<100, >100, >200 m	
					<100, >100, >200 m	
					<100, >100, >200 m	
					<100, >100, >200 m	
					<100, >100, >200 m	
					<100, >100, >200 m	

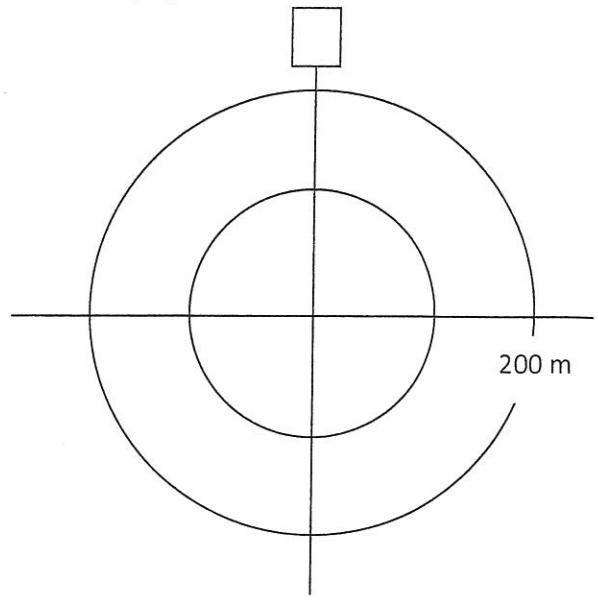

Point Count Name: CB88
Waypoint/Unit Number:
UTM:
Start Time (24 hr) 23:50
Habitat: Mixed - IMG camp road

ID	Species	Repeat?	0-3 min	4-5 min	Distance (circle)	Direction
	Ø				<100, >100, >200 m	
					<100, >100, >200 m	
					<100, >100, >200 m	
					<100, >100, >200 m	
					<100, >100, >200 m	
					<100, >100, >200 m	
					<100, >100, >200 m	
					<100, >100, >200 m	

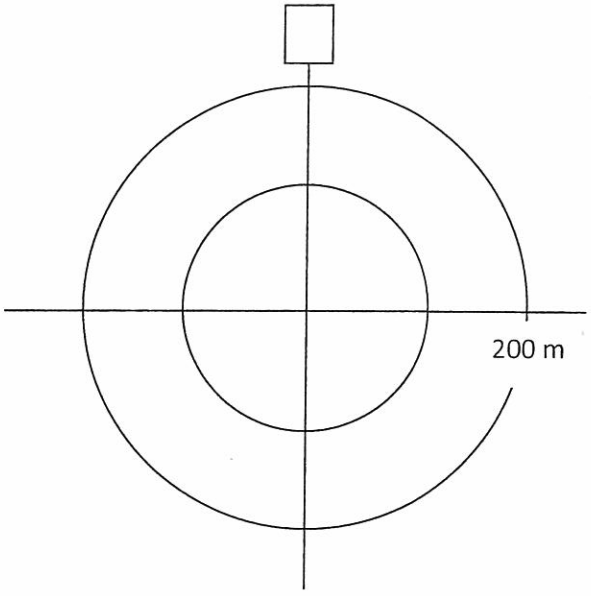

Point Count Name: CB89
Waypoint/Unit Number:
UTM:
Start Time (24 hr) 23:59
Habitat: Mixed - IMG camp road

ID	Species	Repeat?	0-3 min	4-5 min	Distance (circle)	Direction
	Ø				<100, >100, >200 m	
					<100, >100, >200 m	
					<100, >100, >200 m	
					<100, >100, >200 m	
					<100, >100, >200 m	
					<100, >100, >200 m	
					<100, >100, >200 m	
					<100, >100, >200 m	

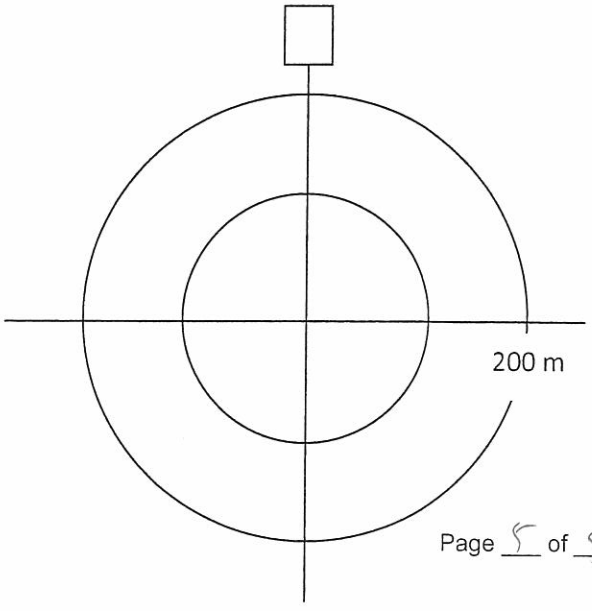

AMEC Earth & Environmental
160 Traders Blvd East, Mississauga, ON L4Z 3K7
Tel: (905) 568-2929
Cell: (416) 459-6228
Fax: (905) 568-1686

Crepuscular Breeding Bird Survey

Project Name: IMG		Project Number: TC121522	
Observers: ME			
Date: June 19/2013	Start Time (24hr): 21:00	End Time (24hr): 1:45	Survey Round: 2
Weather: clear/calm	Temperature: 18°C	Wind: 0	Precipitation (Circle): 0 None 1 Trace 2 Rain 3 Before Count
Moon Observed? yes	Lunar Phase : New • 1st Qtr • Full • 3rd Qtr		

Point Count Name: WPT 10 — Map 18
Waypoint/Unit Number: _____
UTM: _____
Start Time (24 hr) 21:00
Habitat: Mixed open - TLA - end of logging rd.

ID	Species	Repeat?	0-3 min	4-5 min	Distance (circle)	Direction
					<100, >100, >200 m	
					<100, >100, >200 m	
					<100, >100, >200 m	
					<100, >100, >200 m	
					<100, >100, >200 m	
					<100, >100, >200 m	
					<100, >100, >200 m	
					<100, >100, >200 m	

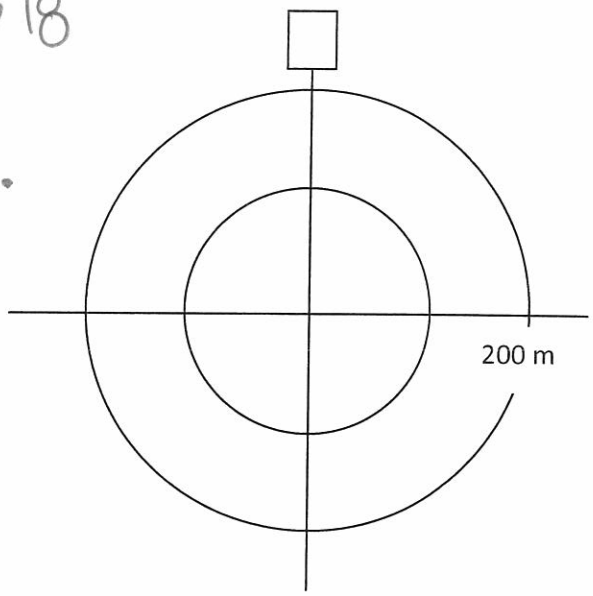

Point Count Name: WPT 9
Waypoint/Unit Number: _____
UTM: _____
Start Time (24 hr) 21:13
Habitat: Mixed open

ID	Species	Repeat?	0-3 min	4-5 min	Distance (circle)	Direction
					<100, >100, >200 m	
					<100, >100, >200 m	
					<100, >100, >200 m	
					<100, >100, >200 m	
					<100, >100, >200 m	
					<100, >100, >200 m	
					<100, >100, >200 m	
					<100, >100, >200 m	

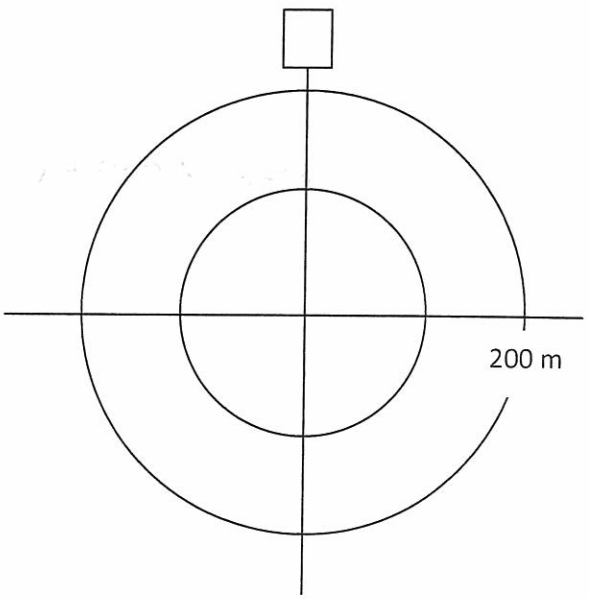

Project Number:
Survey Date:

AMEC Earth & Environmental
160 Traders Blvd East, Mississauga, ON L4Z 3K7
Tel: (905) 568-2929
Cell: (416) 459-6228
Fax: (905) 568-1686

7

Point Count Name: WPT 8
Waypoint/Unit Number:
UTM:
Start Time (24 hr) 21:31
Habitat: mixed open

ID	Species	Repeat?	0-3 min	4-5 min	Distance (circle)	Direction
					<100, >100, >200 m	
	Ø				<100, >100, >200 m	
					<100, >100, >200 m	
					<100, >100, >200 m	
					<100, >100, >200 m	
					<100, >100, >200 m	
					<100, >100, >200 m	
					<100, >100, >200 m	

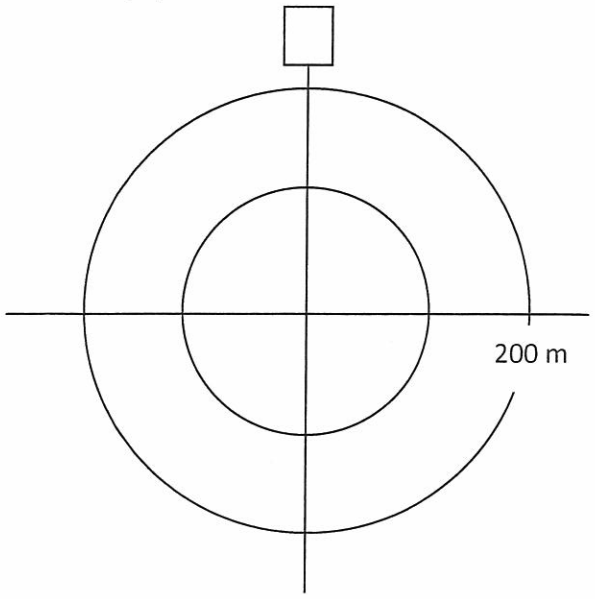

Point Count Name: WPT 7
Waypoint/Unit Number:
UTM:
Start Time (24 hr) 21:40
Habitat: mixed open - some marsh

ID	Species	Repeat?	0-3 min	4-5 min	Distance (circle)	Direction
					<100, >100, >200 m	
	Ø				<100, >100, >200 m	
					<100, >100, >200 m	
					<100, >100, >200 m	
					<100, >100, >200 m	
					<100, >100, >200 m	
					<100, >100, >200 m	
					<100, >100, >200 m	

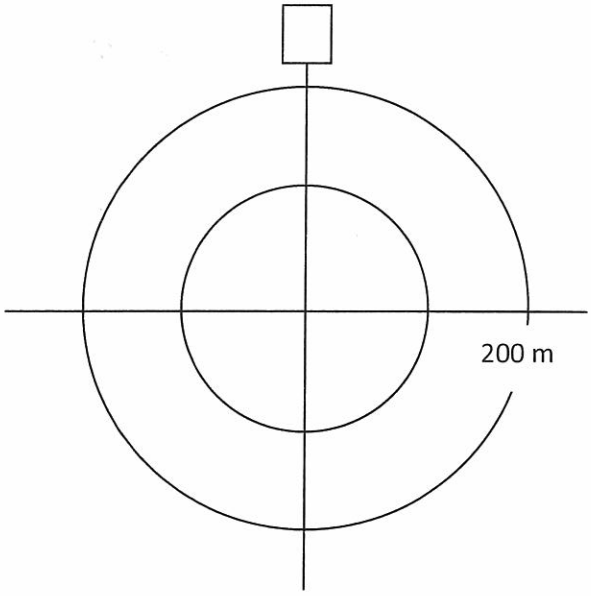

Point Count Name: WPT 6
Waypoint/Unit Number:
UTM:
Start Time (24 hr) 21:52
Habitat: mixed pine / poplar

ID	Species	Repeat?	0-3 min	4-5 min	Distance (circle)	Direction
					<100, >100, >200 m	
	Ø				<100, >100, >200 m	
					<100, >100, >200 m	
					<100, >100, >200 m	
					<100, >100, >200 m	
					<100, >100, >200 m	
					<100, >100, >200 m	
					<100, >100, >200 m	

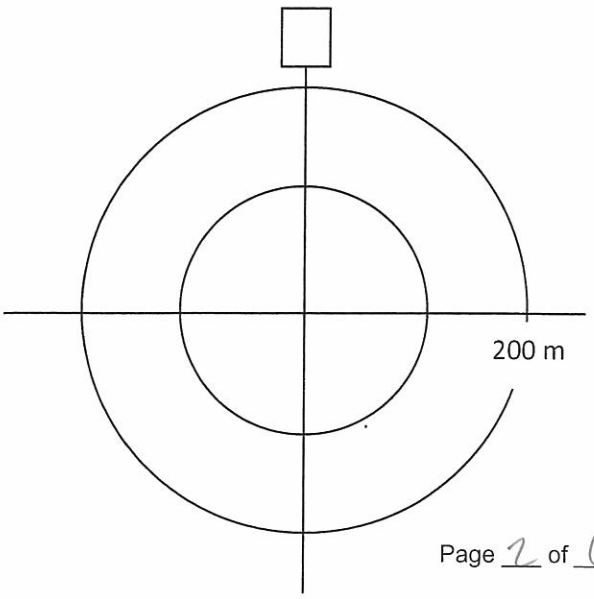

Project Number: TC111504
Survey Date:

AMEC Earth & Environmental
160 Traders Blvd East, Mississauga, ON L4Z 3K7
Tel: (905) 568-2929
Cell: (416) 459-6228
Fax: (905) 568-1686

Point Count Name: WPT5
Waypoint/Unit Number:
UTM:
Start Time (24 hr) 22:08
Habitat: mixed pine/poplar

ID	Species	Repeat?	0-3 min	4-5 min	Distance (circle)	Direction
					<100, >100, >200 m	
					<100, >100, >200 m	
					<100, >100, >200 m	
					<100, >100, >200 m	
					<100, >100, >200 m	
					<100, >100, >200 m	
					<100, >100, >200 m	
					<100, >100, >200 m	

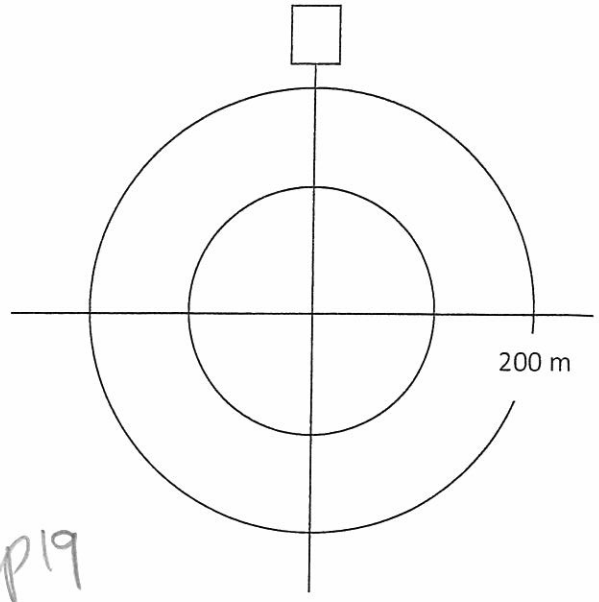

Point Count Name: ~~WPT~~ CB118 - Map 19
Waypoint/Unit Number:
UTM:
Start Time (24 hr) 22:35
Habitat: mixed open

ID	Species	Repeat?	0-3 min	4-5 min	Distance (circle)	Direction
					<100, >100, >200 m	
					<100, >100, >200 m	
					<100, >100, >200 m	
					<100, >100, >200 m	
					<100, >100, >200 m	
					<100, >100, >200 m	
					<100, >100, >200 m	
					<100, >100, >200 m	

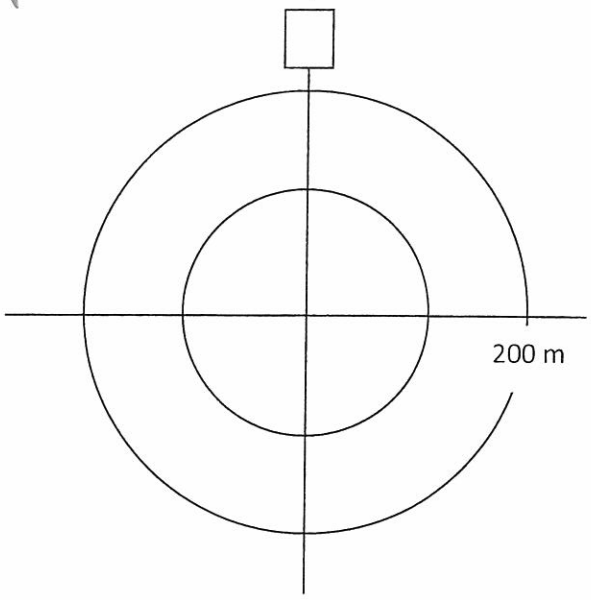

Point Count Name: CB116
Waypoint/Unit Number:
UTM:
Start Time (24 hr) 22h:45
Habitat: conif - mixed - semi open

ID	Species	Repeat?	0-3 min	4-5 min	Distance (circle)	Direction
					<100, >100, >200 m	
					<100, >100, >200 m	
					<100, >100, >200 m	
					<100, >100, >200 m	
					<100, >100, >200 m	
					<100, >100, >200 m	
					<100, >100, >200 m	
					<100, >100, >200 m	

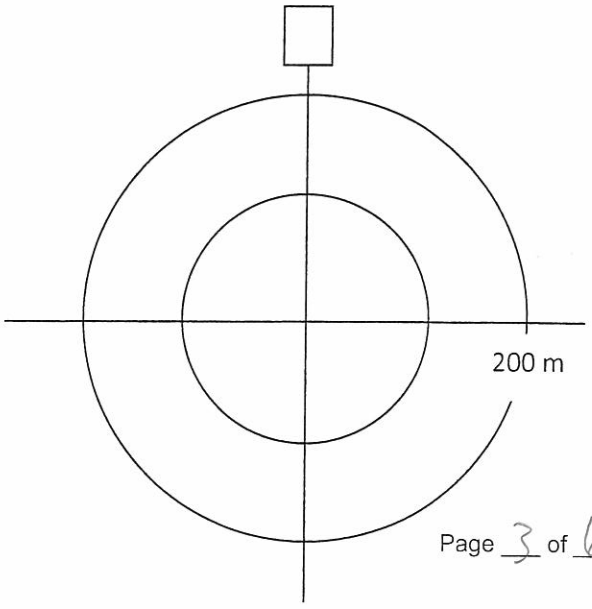

(9)

Project Number: TC111504
Survey Date:

AMEC Earth & Environmental
160 Traders Blvd East, Mississauga, ON L4Z 3K7
Tel: (905) 568-2929
Cell: (416) 459-6228
Fax: (905) 568-1686

Point Count Name: CB120
Waypoint/Unit Number:
UTM:
Start Time (24 hr) 22:55
Habitat: conif - semi open

ID	Species	Repeat?	0-3 min	4-5 min	Distance (circle)	Direction
					<100, >100, >200 m	
					<100, >100, >200 m	
					<100, >100, >200 m	
					<100, >100, >200 m	
					<100, >100, >200 m	
					<100, >100, >200 m	
					<100, >100, >200 m	
					<100, >100, >200 m	

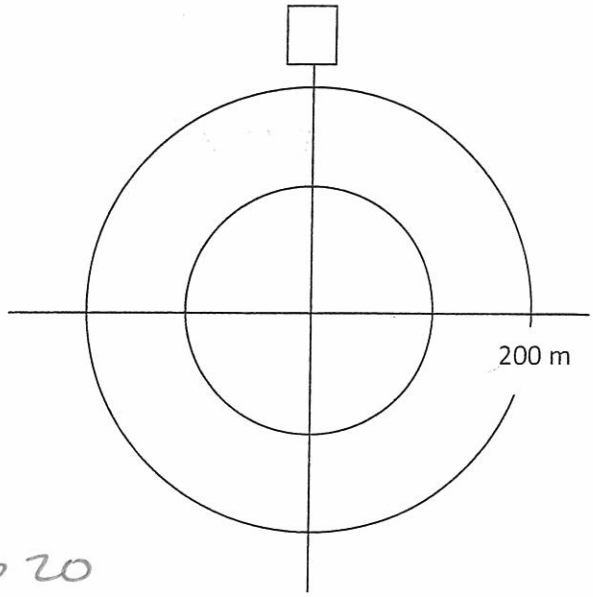

Point Count Name: CB129 - Map 20
Waypoint/Unit Number:
UTM:
Start Time (24 hr) 23:10
Habitat: Mixed open - clear cut

ID	Species	Repeat?	0-3 min	4-5 min	Distance (circle)	Direction
					<100, >100, >200 m	
					<100, >100, >200 m	
					<100, >100, >200 m	
					<100, >100, >200 m	
					<100, >100, >200 m	
					<100, >100, >200 m	
					<100, >100, >200 m	
					<100, >100, >200 m	

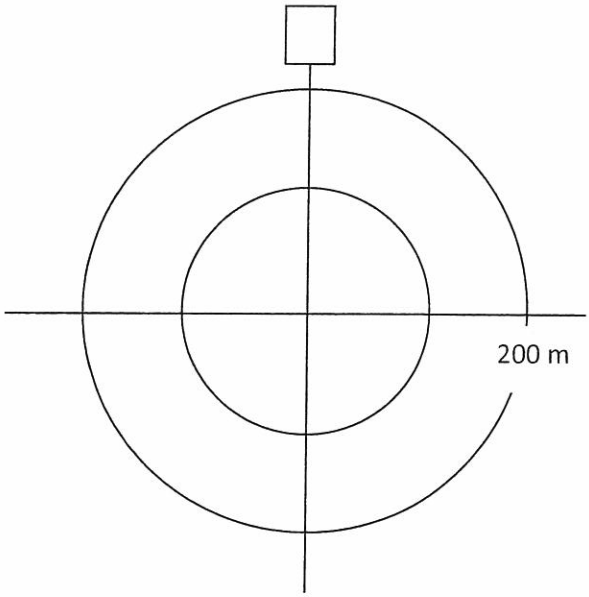

Point Count Name: CB127
Waypoint/Unit Number:
UTM:
Start Time (24 hr) 23:21
Habitat: Open - clear cut

ID	Species	Repeat?	0-3 min	4-5 min	Distance (circle)	Direction
					<100, >100, >200 m	
					<100, >100, >200 m	
					<100, >100, >200 m	
					<100, >100, >200 m	
					<100, >100, >200 m	
					<100, >100, >200 m	
					<100, >100, >200 m	
					<100, >100, >200 m	

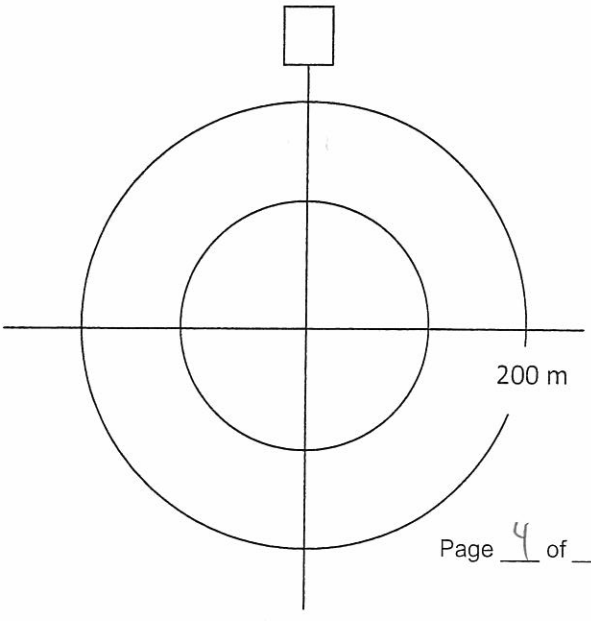

(10)

Project Number: TC111504
Survey Date:

AMEC Earth & Environmental
160 Traders Blvd East, Mississauga, ON L4Z 3K7
Tel: (905) 568-2929
Cell: (416) 459-6228
Fax: (905) 568-1686

Point Count Name: CB130
Waypoint/Unit Number:
UTM:
Start Time (24 hr) 23:35
Habitat: open - edge of conif

ID	Species	Repeat?	0-3 min	4-5 min	Distance (circle)	Direction
	Ø				<100, >100, >200 m	
					<100, >100, >200 m	
					<100, >100, >200 m	
					<100, >100, >200 m	
					<100, >100, >200 m	
					<100, >100, >200 m	
					<100, >100, >200 m	
					<100, >100, >200 m	

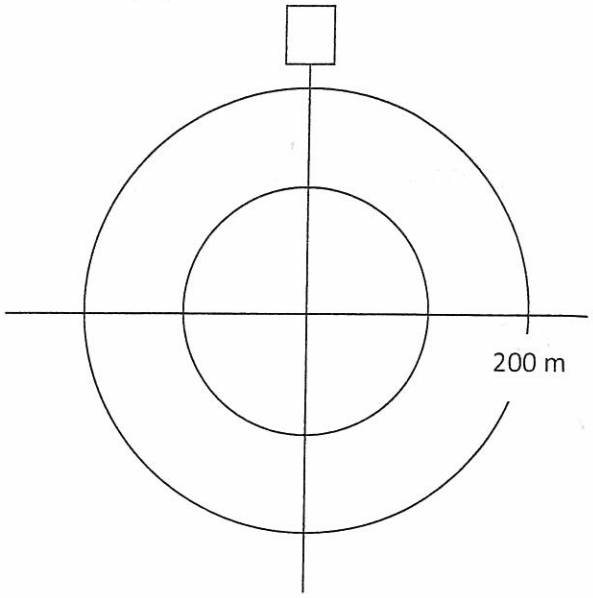

Point Count Name: CB131
Waypoint/Unit Number:
UTM:
Start Time (24 hr) 23:44
Habitat: open - regen conif - edge

ID	Species	Repeat?	0-3 min	4-5 min	Distance (circle)	Direction
					<100, >100, >200 m	
					<100, >100, >200 m	
	Ø				<100, >100, >200 m	
					<100, >100, >200 m	
					<100, >100, >200 m	
					<100, >100, >200 m	
					<100, >100, >200 m	
					<100, >100, >200 m	

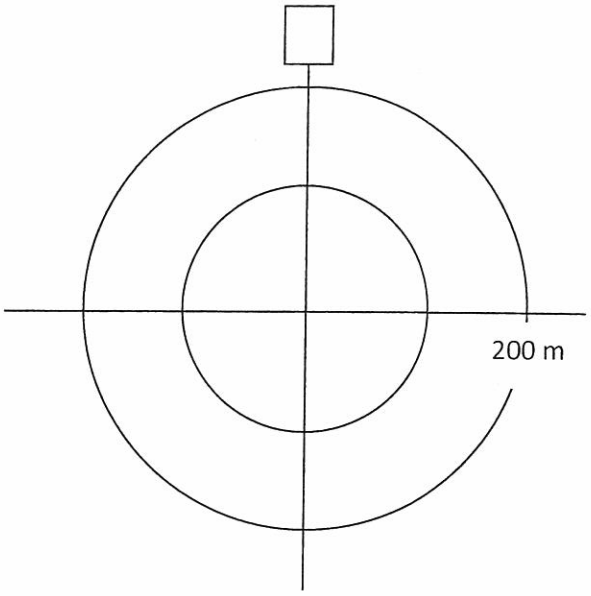

Point Count Name: CB133
Waypoint/Unit Number:
UTM:
Start Time (24 hr) 23:55
Habitat: open - clear cut w/ regen.

ID	Species	Repeat?	0-3 min	4-5 min	Distance (circle)	Direction
					<100, >100, >200 m	
					<100, >100, >200 m	
	Ø				<100, >100, >200 m	
					<100, >100, >200 m	
					<100, >100, >200 m	
					<100, >100, >200 m	
					<100, >100, >200 m	
					<100, >100, >200 m	

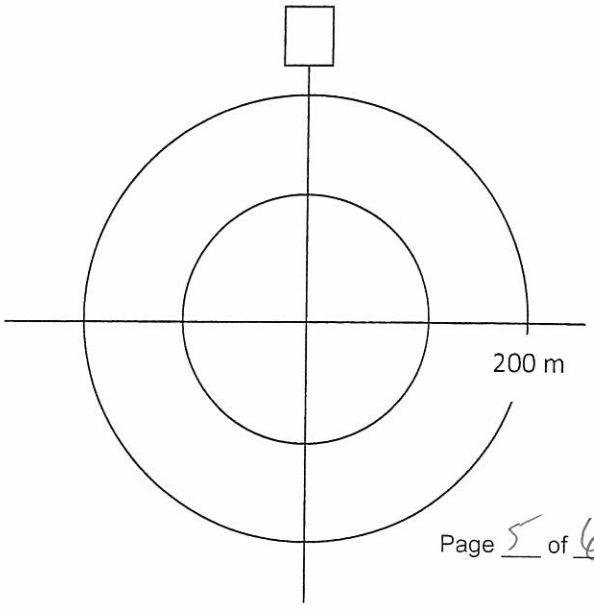

Project Number: TC111504
Survey Date:

AMEC Earth & Environmental
160 Traders Blvd East, Mississauga, ON L4Z 3K7
Tel: (905) 568-2929
Cell: (416) 459-6228
Fax: (905) 568-1686

11

Point Count Name: CB134
Waypoint/Unit Number:
UTM:
Start Time (24 hr) 1:08
Habitat: open - clear cut conif regen

ID	Species	Repeat?	0-3 min	4-5 min	Distance (circle)	Direction
	Ø				<100, >100, >200 m	
					<100, >100, >200 m	
					<100, >100, >200 m	
					<100, >100, >200 m	
					<100, >100, >200 m	
					<100, >100, >200 m	
					<100, >100, >200 m	
					<100, >100, >200 m	

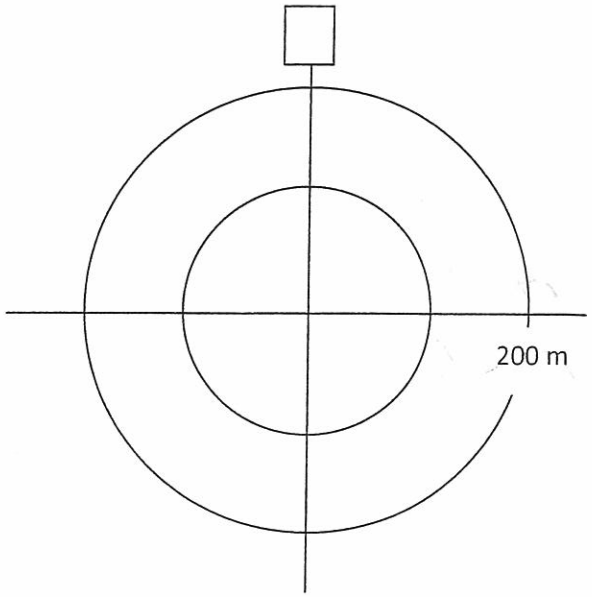

Point Count Name: WPT 11
Waypoint/Unit Number:
UTM:
Start Time (24 hr) 1832
Habitat: open clear cut on Hwy 56

ID	Species	Repeat?	0-3 min	4-5 min	Distance (circle)	Direction
					<100, >100, >200 m	
					<100, >100, >200 m	
					<100, >100, >200 m	
					<100, >100, >200 m	
					<100, >100, >200 m	
					<100, >100, >200 m	
					<100, >100, >200 m	
					<100, >100, >200 m	

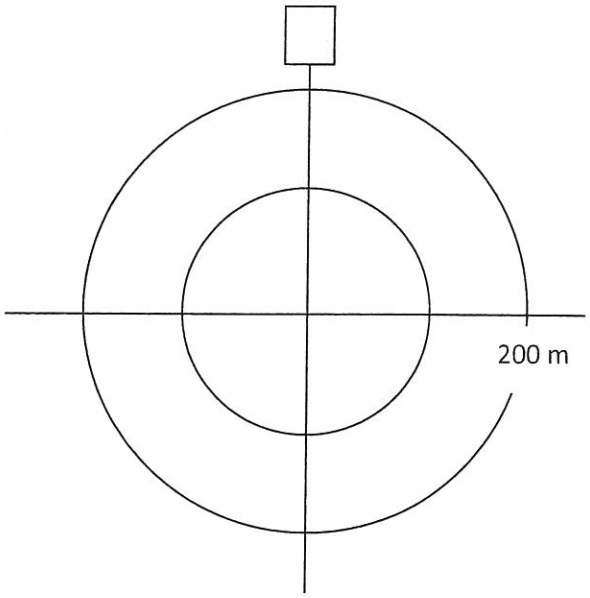

Point Count Name: WPT 12
Waypoint/Unit Number:
UTM:
Start Time (24 hr) 1845
Habitat: Mixed - edge

ID	Species	Repeat?	0-3 min	4-5 min	Distance (circle)	Direction
	Ø				<100, >100, >200 m	
					<100, >100, >200 m	
					<100, >100, >200 m	
					<100, >100, >200 m	
					<100, >100, >200 m	
					<100, >100, >200 m	
					<100, >100, >200 m	
					<100, >100, >200 m	

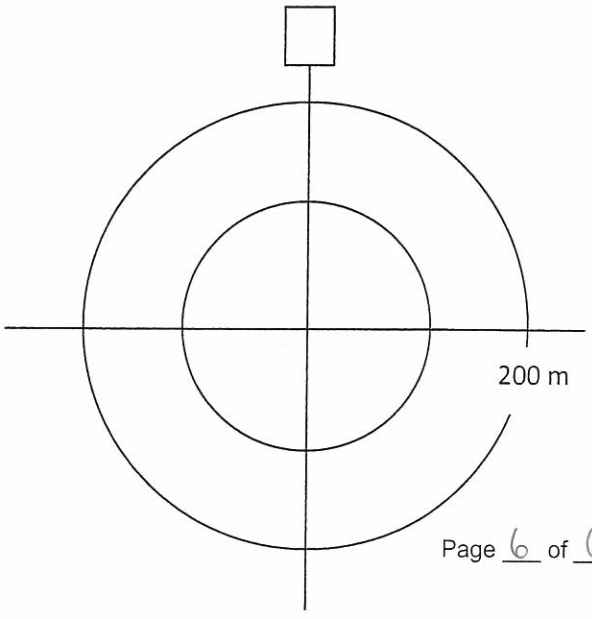

(12) (3)

AMEC Earth & Environmental
160 Traders Blvd East, Mississauga, ON L4Z 3K7
Tel: (905) 568-2929
Cell: (416) 459-6228
Fax: (905) 568-1686

Crepuscular Breeding Bird Survey

Project Name: JMG		**Project Number:** TC121522	
Observers: ME			
Date: June 20/2013	**Start Time (24hr):** 21:30	**End Time (24hr):** 1:04 June 21	**Survey Round:** 2
Weather: Partly Cloudy	**Temperature:** 18°C	**Wind:** 0	**Precipitation** (Circle): 0 None 1 Trace 2 Rain 3 Before **Count**
Moon Observed? Yes	**Lunar Phase :** New • (1st Qtr) • Full • 3rd Qtr		

Point Count Name: CB8 - Map 2
Waypoint/Unit Number: _____
UTM: _____
Start Time (24 hr) 21:30
Habitat: clear cut - edge

ID	Species	Repeat?	0-3 min	4-5 min	Distance (circle)	Direction
					<100, >100, >200 m	
					<100, >100, >200 m	
					<100, >100, >200 m	
					<100, >100, >200 m	
					<100, >100, >200 m	
					<100, >100, >200 m	
					<100, >100, >200 m	
					<100, >100, >200 m	

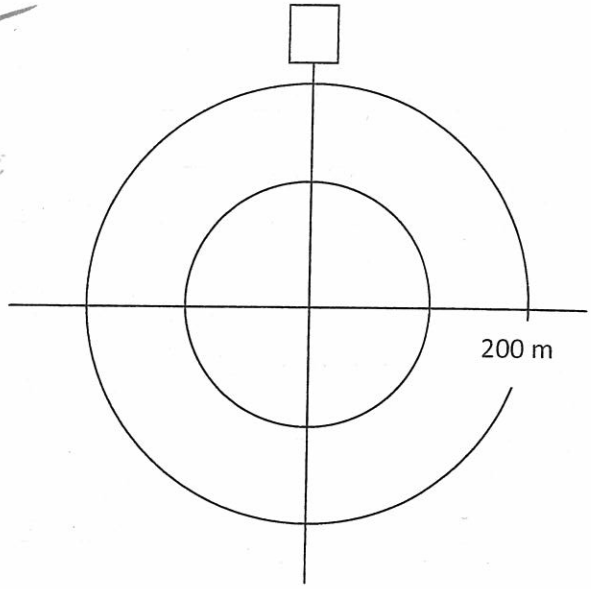

Point Count Name: CB10
Waypoint/Unit Number: _____
UTM: _____
Start Time (24 hr) 21:44
Habitat: mixed regen - clear cut - edge

ID	Species	Repeat?	0-3 min	4-5 min	Distance (circle)	Direction
					<100, >100, >200 m	
					<100, >100, >200 m	
					<100, >100, >200 m	
					<100, >100, >200 m	
					<100, >100, >200 m	
					<100, >100, >200 m	
					<100, >100, >200 m	
					<100, >100, >200 m	

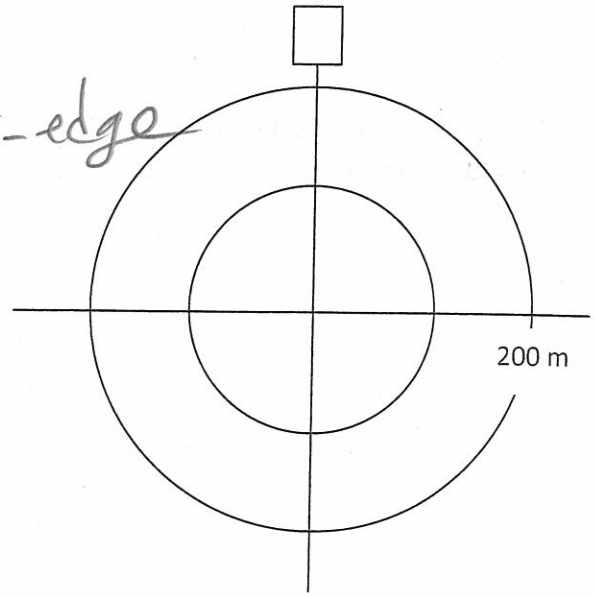

Project Number:
Survey Date:

AMEC Earth & Environmental
160 Traders Blvd East, Mississauga, ON L4Z 3K7
Tel: (905) 568-2929
Cell: (416) 459-6228
Fax: (905) 568-1686

Point Count Name: CB12
Waypoint/Unit Number:
UTM:
Start Time (24 hr) 21:55
Habitat: mixed semi open - edge

ID	Species	Repeat?	0-3 min	4-5 min	Distance (circle)	Direction
					<100, >100, >200 m	
					<100, >100, >200 m	
					<100, >100, >200 m	
					<100, >100, >200 m	
					<100, >100, >200 m	
					<100, >100, >200 m	
					<100, >100, >200 m	
					<100, >100, >200 m	

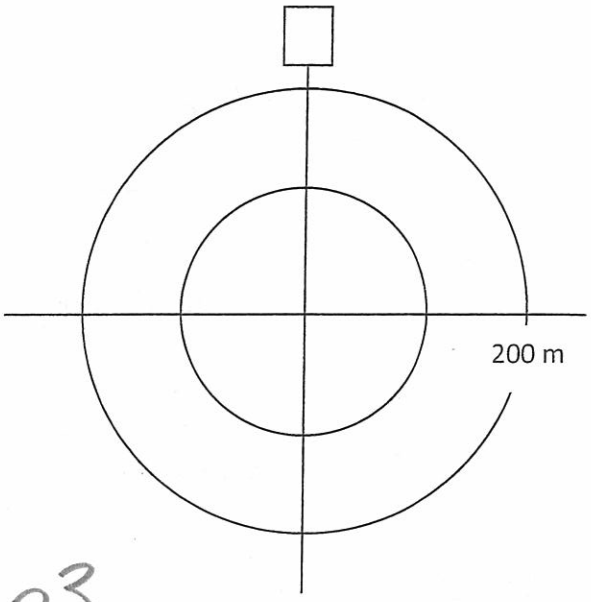

Point Count Name: CB17 - Map3
Waypoint/Unit Number:
UTM:
Start Time (24 hr) 22:20
Habitat: mixed open edge - Marsh - TLA

ID	Species	Repeat?	0-3 min	4-5 min	Distance (circle)	Direction
					<100, >100, >200 m	
					<100, >100, >200 m	
					<100, >100, >200 m	
					<100, >100, >200 m	
					<100, >100, >200 m	
					<100, >100, >200 m	
					<100, >100, >200 m	
					<100, >100, >200 m	

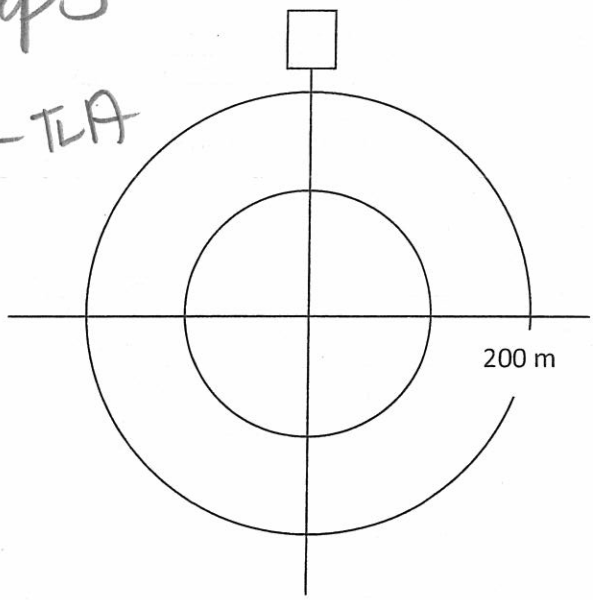

Point Count Name: CB19
Waypoint/Unit Number:
UTM:
Start Time (24 hr) 22:45
Habitat: TLA open edge

ID	Species	Repeat?	0-3 min	4-5 min	Distance (circle)	Direction
					<100, >100, >200 m	
					<100, >100, >200 m	
					<100, >100, >200 m	
					<100, >100, >200 m	
					<100, >100, >200 m	
					<100, >100, >200 m	
					<100, >100, >200 m	
					<100, >100, >200 m	

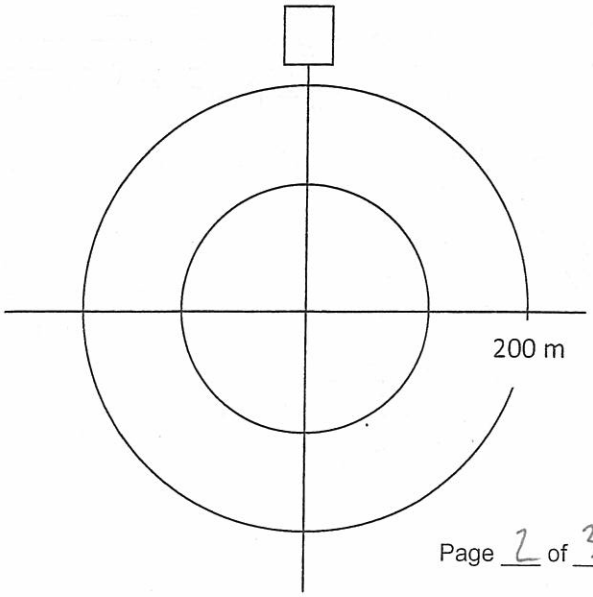

Project Number: TC111504
Survey Date:

AMEC Earth & Environmental
160 Traders Blvd East, Mississauga, ON L4Z 3K7
Tel: (905) 568-2929
Cell: (416) 459-6228
Fax: (905) 568-1686

Point Count Name: CB21
Waypoint/Unit Number:
UTM:
Start Time (24 hr) 23:40
Habitat: TLA open edge

~Map4

ID	Species	Repeat?	0-3 min	4-5 min	Distance (circle)	Direction
					<100, >100, >200 m	
					<100, >100, >200 m	
					<100, >100, >200 m	
					<100, >100, >200 m	
					<100, >100, >200 m	
					<100, >100, >200 m	
					<100, >100, >200 m	
					<100, >100, >200 m	

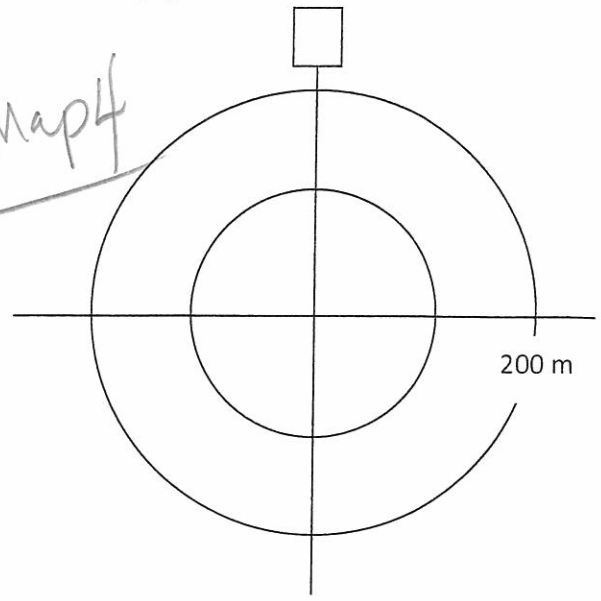

Point Count Name: CB22
Waypoint/Unit Number:
UTM:
Start Time (24 hr) 23:50
Habitat: TLA open edge - conif

ID	Species	Repeat?	0-3 min	4-5 min	Distance (circle)	Direction
					<100, >100, >200 m	
					<100, >100, >200 m	
					<100, >100, >200 m	
					<100, >100, >200 m	
					<100, >100, >200 m	
					<100, >100, >200 m	
					<100, >100, >200 m	
					<100, >100, >200 m	

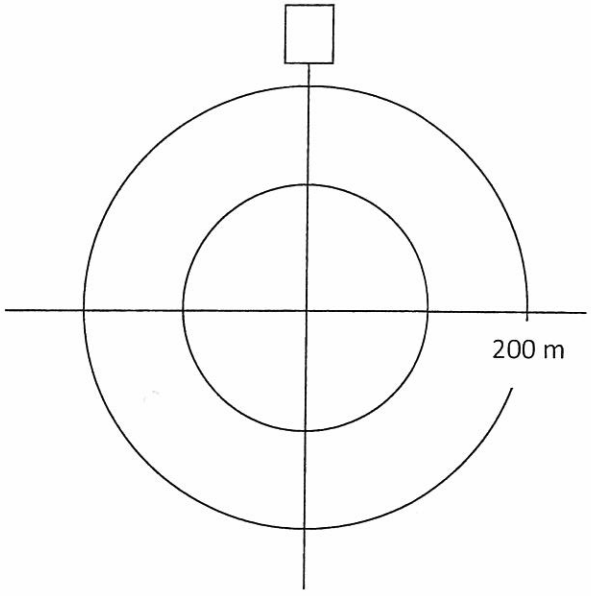

Point Count Name:
Waypoint/Unit Number:
UTM:
Start Time (24 hr)
Habitat:

ID	Species	Repeat?	0-3 min	4-5 min	Distance (circle)	Direction
					<100, >100, >200 m	
					<100, >100, >200 m	
					<100, >100, >200 m	
					<100, >100, >200 m	
					<100, >100, >200 m	
					<100, >100, >200 m	
					<100, >100, >200 m	
					<100, >100, >200 m	

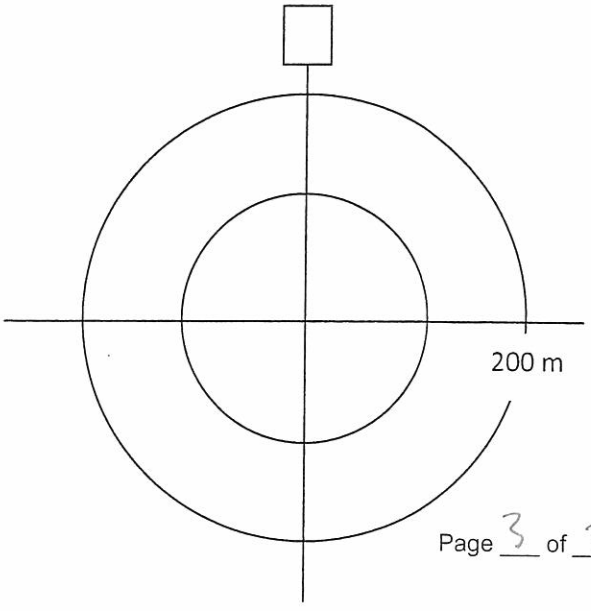

(15)

AMEC Earth & Environmental
160 Traders Blvd East, Mississauga, ON L4Z 3K7
Tel: (905) 568-2929
Cell: (416) 459-6228
Fax: (905) 568-1686

Crepuscular Breeding Bird Survey

Project Name: IMG		**Project Number:** TC121522	
Observers: ME			
Date: June 22/13	**Start Time (24hr):** 21:45	**End Time (24hr):** 23:41	**Survey Round:** 2
Weather: clear/calm	**Temperature:** 16°C	**Wind:** 0	**Precipitation** (Circle): (0) None 1 Trace 2 Rain 3 Before Count
Moon Observed? Yes	**Lunar Phase :** New • (1st Qtr) • Full • 3rd Qtr		

Point Count Name: CB47 – Map 8
Waypoint/Unit Number:
UTM:
Start Time (24 hr) 21:45
Habitat: open clear cut –

ID	Species	Repeat?	0-3 min	4-5 min	Distance (circle)	Direction
					<100, >100, >200 m	
					<100, >100, >200 m	
					<100, >100, >200 m	
					<100, >100, >200 m	
					<100, >100, >200 m	
					<100, >100, >200 m	
					<100, >100, >200 m	
					<100, >100, >200 m	

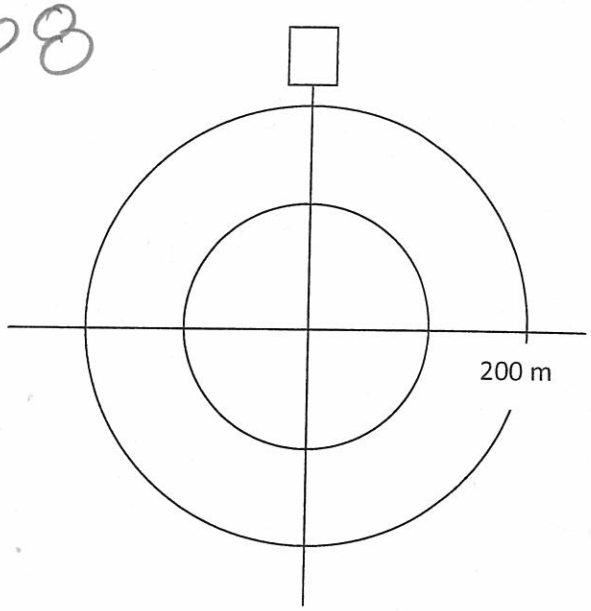

Point Count Name: CB48
Waypoint/Unit Number:
UTM:
Start Time (24 hr) 22:12
Habitat: thick closed conif – road edge

ID	Species	Repeat?	0-3 min	4-5 min	Distance (circle)	Direction
					<100, >100, >200 m	
					<100, >100, >200 m	
					<100, >100, >200 m	
					<100, >100, >200 m	
					<100, >100, >200 m	
					<100, >100, >200 m	
					<100, >100, >200 m	
					<100, >100, >200 m	

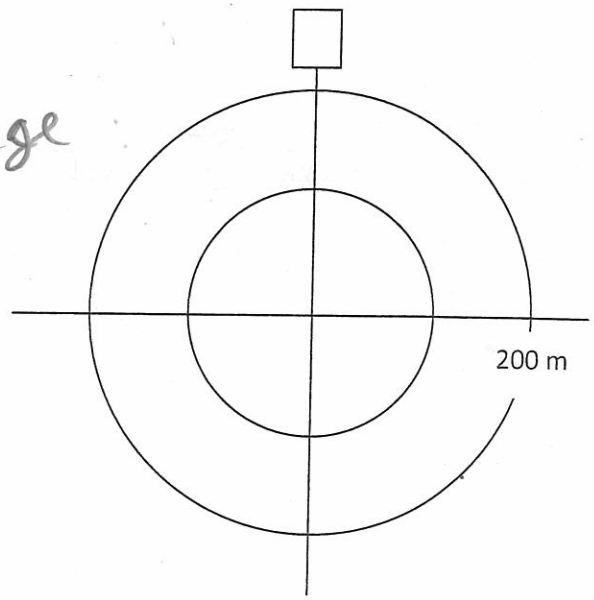

Project Number:
Survey Date:

amec
AMEC Earth & Environmental
160 Traders Blvd East, Mississauga, ON L4Z 3K7
Tel: (905) 568-2929
Cell: (416) 459-6228
Fax: (905) 568-1686

Point Count Name: CB49
Waypoint/Unit Number:
UTM:
Start Time (24 hr) 22:45
Habitat: marsh edge - mixed

Map 9

ID	Species	Repeat?	0-3 min	4-5 min	Distance (circle)	Direction
					<100, >100, >200 m	
					<100, >100, >200 m	
					<100, >100, >200 m	
					<100, >100, >200 m	
					<100, >100, >200 m	
					<100, >100, >200 m	
					<100, >100, >200 m	
					<100, >100, >200 m	

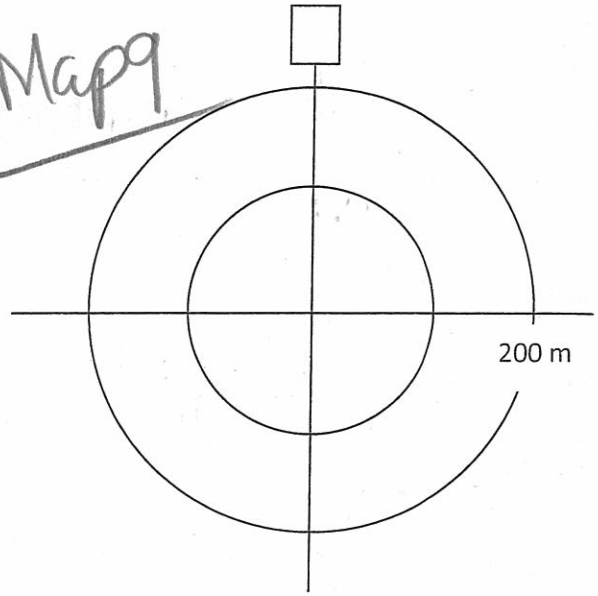

Point Count Name: CB53
Waypoint/Unit Number:
UTM:
Start Time (24 hr) 23:08
Habitat: clear cut regen

ID	Species	Repeat?	0-3 min	4-5 min	Distance (circle)	Direction
					<100, >100, >200 m	
					<100, >100, >200 m	
					<100, >100, >200 m	
					<100, >100, >200 m	
					<100, >100, >200 m	
					<100, >100, >200 m	
					<100, >100, >200 m	
					<100, >100, >200 m	

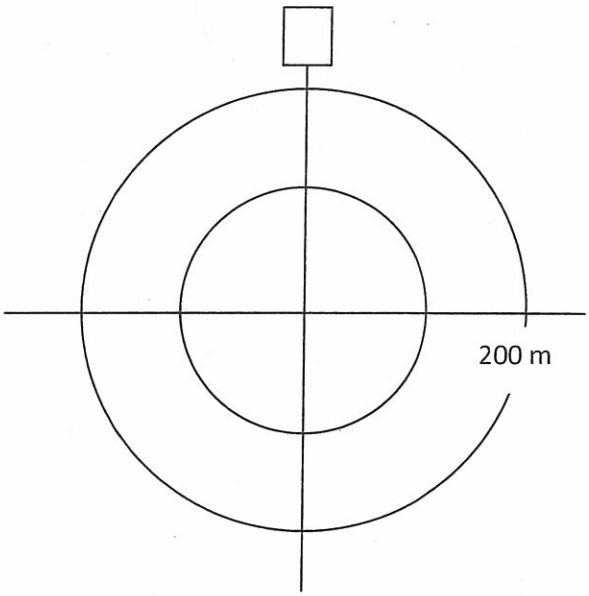

Point Count Name: CB54
Waypoint/Unit Number:
UTM:
Start Time (24 hr) 23:24
Habitat: thick mixed / conif - road edge

ID	Species	Repeat?	0-3 min	4-5 min	Distance (circle)	Direction
					<100, >100, >200 m	
					<100, >100, >200 m	
					<100, >100, >200 m	
					<100, >100, >200 m	
					<100, >100, >200 m	
					<100, >100, >200 m	
					<100, >100, >200 m	
					<100, >100, >200 m	

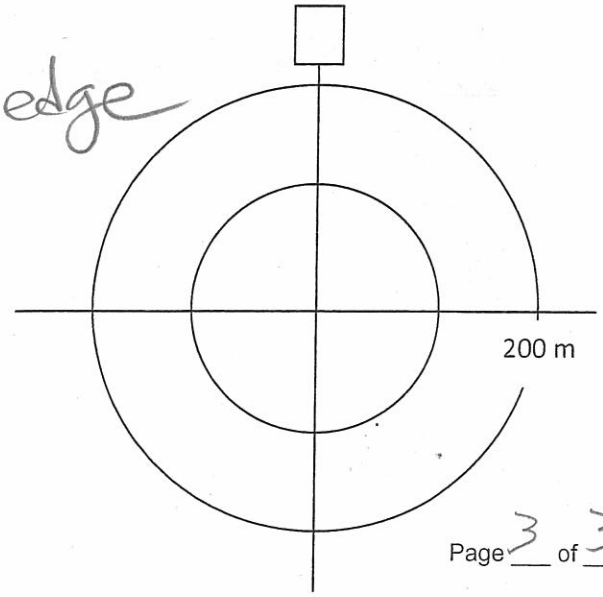

Project Number: TC111504
Survey Date:

AMEC Earth & Environmental
160 Traders Blvd East, Mississauga, ON L4Z 3K7
Tel: (905) 568-2929
Cell: (416) 459-6228
Fax: (905) 568-1686

17

Point Count Name: CB55
Waypoint/Unit Number:
UTM:
Start Time (24 hr) 23:35
Habitat: thick conif – road edge

ID	Species	Repeat?	0-3 min	4-5 min	Distance (circle)	Direction
					<100, >100, >200 m	
					<100, >100, >200 m	
					<100, >100, >200 m	
					<100, >100, >200 m	
					<100, >100, >200 m	
					<100, >100, >200 m	
					<100, >100, >200 m	
					<100, >100, >200 m	

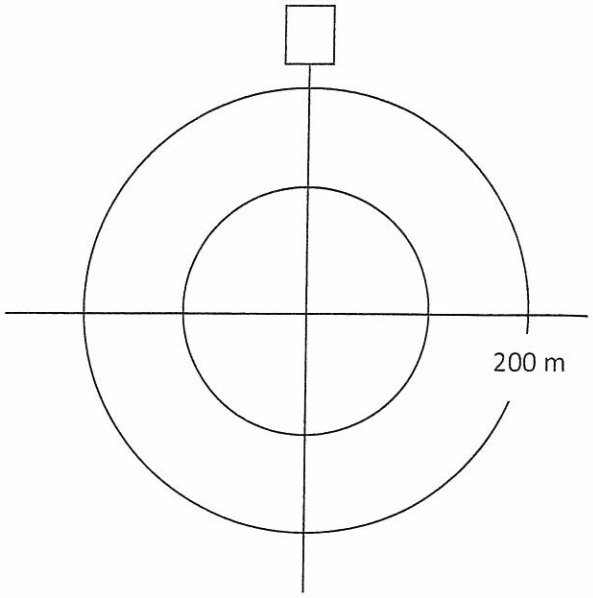

Point Count Name:
Waypoint/Unit Number:
UTM:
Start Time (24 hr)
Habitat:

ID	Species	Repeat?	0-3 min	4-5 min	Distance (circle)	Direction
					<100, >100, >200 m	
					<100, >100, >200 m	
					<100, >100, >200 m	
					<100, >100, >200 m	
					<100, >100, >200 m	
					<100, >100, >200 m	
					<100, >100, >200 m	
					<100, >100, >200 m	

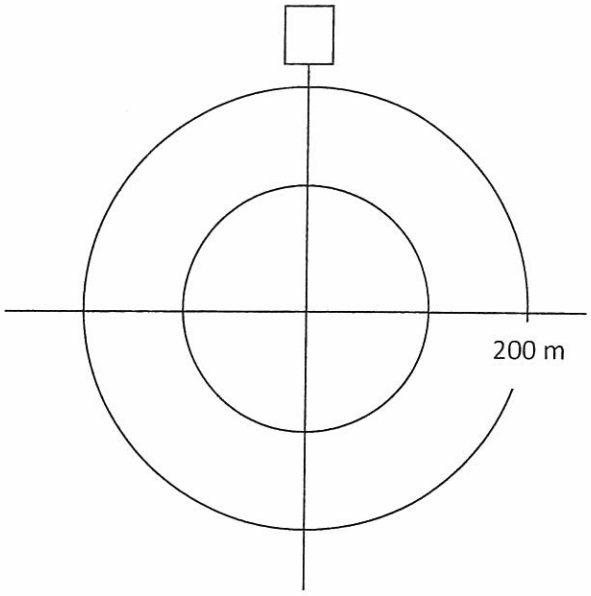

Point Count Name:
Waypoint/Unit Number:
UTM:
Start Time (24 hr)
Habitat:

ID	Species	Repeat?	0-3 min	4-5 min	Distance (circle)	Direction
					<100, >100, >200 m	
					<100, >100, >200 m	
					<100, >100, >200 m	
					<100, >100, >200 m	
					<100, >100, >200 m	
					<100, >100, >200 m	
					<100, >100, >200 m	
					<100, >100, >200 m	

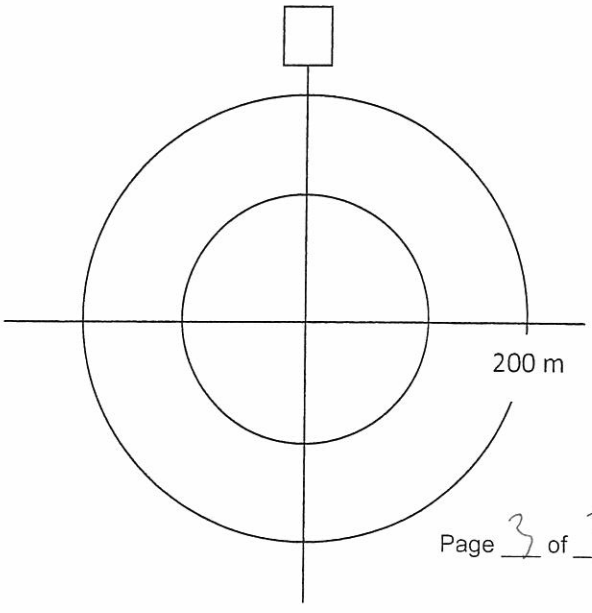

M (1)

AMEC Earth & Environmental
160 Traders Blvd East, Mississauga, ON L4Z 3K7
Tel: (905) 568-2929
Cell: (416) 459-6228
Fax: (905) 568-1686

Marsh Bird Survey

Project Name: IMG		**Project Number:** TC121522	
Crew Leader: ME	**Observers:** ME		
Date: June 19/13	**Start Time (24hr):** 07:00	**End Time (24hr):** 10:05	
Weather: clear/calm	**Temperature:** 15 °C	**Wind:** 0	**Precipitation (Circle):** 0 None, 1 Haze/Fog, 2 Drizzle, 3 Rain

Point Count Name: 002A – Map 15
UTM:
Start Time 07:00
Habitat: Hwy edge - conif marsh

Focal Species																			
Species Code	Before/After Survey Period	Passive Listening Minutes					Call Playback Minutes					Passive Listening Minutes					Direction	Previously Detected?	Notes
		1	2	3	4	5	6	7	8	9	10	11	12	13	14	15			

Secondary Species				
Species Code	# Observed			
	0-5	5-10	10-15	O/F

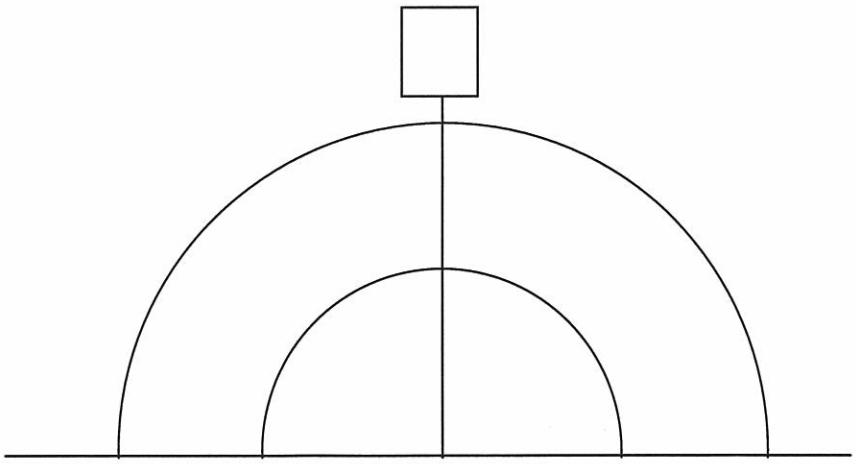

Focal Species: American Bittern (AMBI), King Rail (KIRA), Pied-billed Grebe (PBGR), Virginia Rail (VIRA), American Coot (AMCO), Common Moorhen (COMO), Least Bittern (LEBI), Sora (SORA), Yellow Rail (YERA)

M (2)

AMEC Earth & Environmental
160 Traders Blvd East, Mississauga, ON L4Z 3K7
Tel: (905) 568-2929
Cell: (416) 459-6228
Fax: (905) 568-1686

Marsh Bird Survey

Project Name:		Project Number:	
Crew Leader:		Observers:	
Date: June 19/13	Start Time (24hr):	End Time (24hr):	
Weather:	Temperature:	Wind:	Precipitation (Circle): 0 None 1 Haze/Fog 2 Drizzle 3 Rain

Point Count Name: 002B
UTM: _____
Start Time 07:40
Habitat: Marsh - edge of conif.

Focal Species																			
Species Code	Before/After Survey Period	Passive Listening Minutes					Call Playback Minutes					Passive Listening Minutes					Direction	Previously Detected?	Notes
		1	2	3	4	5	6	7	8	9	10	11	12	13	14	15			

Secondary Species				
Species Code	# Observed			
	0-5	5-10	10-15	O/F

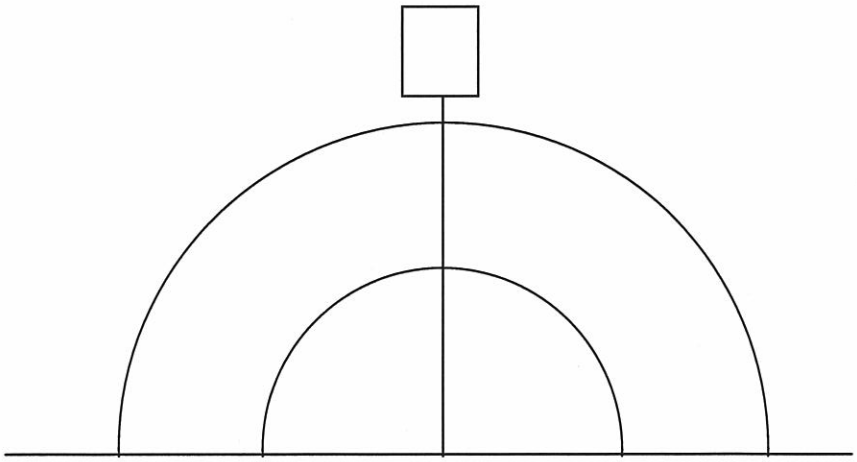

Focal Species: American Bittern (AMBI), King Rail (KIRA), Pied-billed Grebe (PBGR), Virginia Rail (VIRA), American Coot (AMCO), Common Moorhen (COMO), Least Bittern (LEBI), Sora (SORA), Yellow Rail (YERA)

M 3

AMEC Earth & Environmental
160 Traders Blvd East, Mississauga, ON L4Z 3K7
Tel: (905) 568-2929
Cell: (416) 459-6228
Fax: (905) 568-1686

Marsh Bird Survey

Project Name:		Project Number:	
Crew Leader:		Observers:	
Date: June 19/13	Start Time (24hr):	End Time (24hr):	
Weather:	Temperature:	Wind:	Precipitation (Circle): 0 None 1 Haze/Fog 2 Drizzle 3 Rain

Point Count Name: 002C
UTM: _____
Start Time 08:10
Habitat: Marsh - cont

Focal Species																			
Species Code	Before/After Survey Period	Passive Listening Minutes					Call Playback Minutes					Passive Listening Minutes					Direction	Previously Detected?	Notes
		1	2	3	4	5	6	7	8	9	10	11	12	13	14	15			

Secondary Species				
Species Code	# Observed			
	0-5	5-10	10-15	O/F

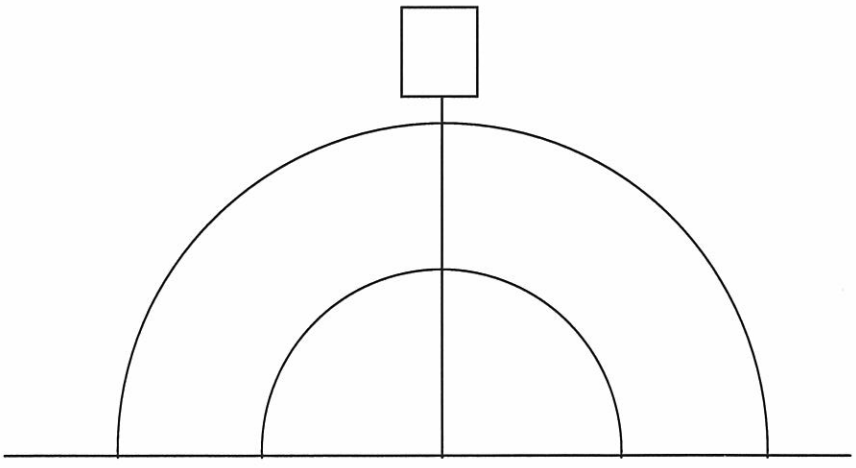

Focal Species: American Bittern (AMBI), King Rail (KIRA), Pied-billed Grebe (PBGR), Virginia Rail (VIRA), American Coot (AMCO), Common Moorhen (COMO), Least Bittern (LEBI), Sora (SORA), Yellow Rail (YERA)

M4

AMEC Earth & Environmental
160 Traders Blvd East, Mississauga, ON L4Z 3K7
Tel: (905) 568-2929
Cell: (416) 459-6228
Fax: (905) 568-1686

Marsh Bird Survey

Project Name:		Project Number:	
Crew Leader:		Observers:	
Date: June 19/13	Start Time (24hr):	End Time (24hr):	
Weather:	Temperature:	Wind:	Precipitation (Circle): 0 None 1 Haze/Fog 2 Drizzle 3 Rain

Point Count Name: 002D
UTM: _____
Start Time 09:12
Habitat: conif marsh

Focal Species																			
Species Code	Before/After Survey Period	Passive Listening Minutes					Call Playback Minutes					Passive Listening Minutes					Direction	Previously Detected?	Notes
		1	2	3	4	5	6	7	8	9	10	11	12	13	14	15			

Secondary Species				
Species Code	# Observed			
	0-5	5-10	10-15	O/F

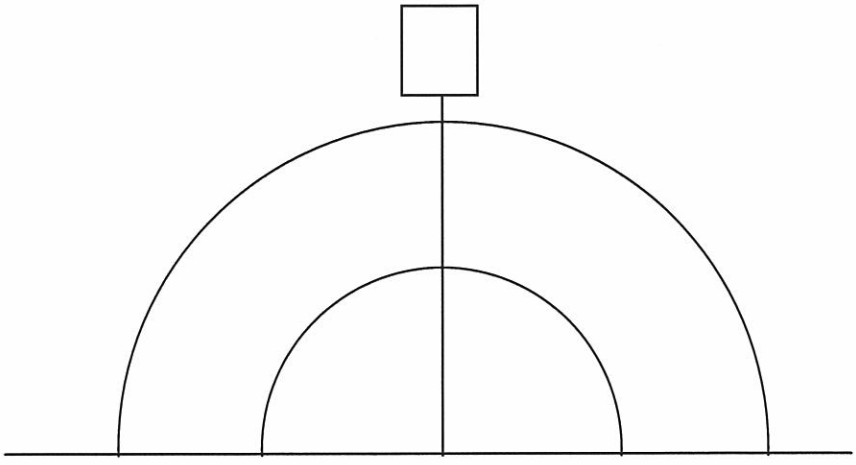

Focal Species: American Bittern (AMBI), King Rail (KIRA), Pied-billed Grebe (PBGR), Virginia Rail (VIRA), American Coot (AMCO), Common Moorhen (COMO), Least Bittern (LEBI), Sora (SORA), Yellow Rail (YERA)

MS

AMEC Earth & Environmental
160 Traders Blvd East, Mississauga, ON L4Z 3K7
Tel: (905) 568-2929
Cell: (416) 459-6228
Fax: (905) 568-1686

Marsh Bird Survey

Project Name:		Project Number:	
Crew Leader:		Observers:	
Date: June 19/13	Start Time (24hr):	End Time (24hr):	
Weather:	Temperature:	Wind:	Precipitation (Circle): 0 None 1 Haze/Fog 2 Drizzle 3 Rain

Point Count Name: 002-E
UTM: _____
Start Time 09:30
Habitat: Marsh

Focal Species																			
Species Code	Before/After Survey Period	Passive Listening Minutes					Call Playback Minutes					Passive Listening Minutes					Direction	Previously Detected?	Notes
		1	2	3	4	5	6	7	8	9	10	11	12	13	14	15			

Secondary Species				
Species Code	# Observed			
	0-5	5-10	10-15	O/F

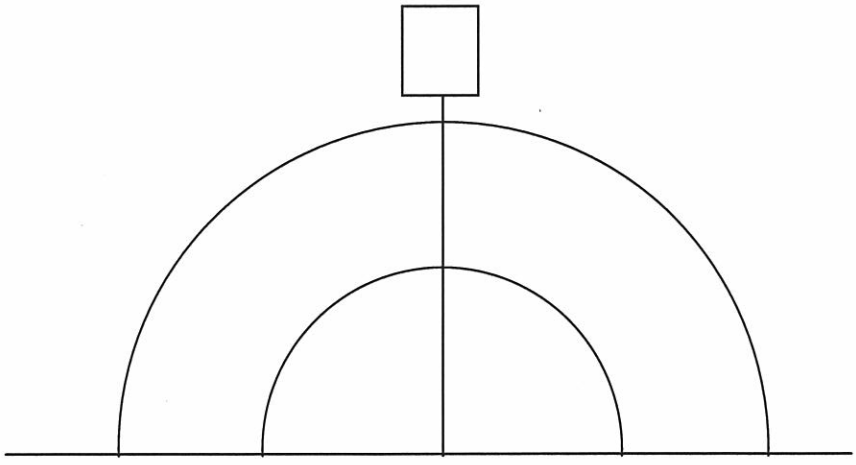

Focal Species: American Bittern (AMBI), King Rail (KIRA), Pied-billed Grebe (PBGR), Virginia Rail (VIRA), American Coot (AMCO), Common Moorhen (COMO), Least Bittern (LEBI), Sora (SORA), Yellow Rail (YERA)

M6

AMEC Earth & Environmental
160 Traders Blvd East, Mississauga, ON L4Z 3K7
Tel: (905) 568-2929
Cell: (416) 459-6228
Fax: (905) 568-1686

Marsh Bird Survey

Project Name: IMG		**Project Number:**	
Crew Leader: ME	**Observers:** ME		
Date: June 20/13	**Start Time (24hr):** 07:40	**End Time (24hr):** 09:55	
Weather: clear/calm	**Temperature:** 12°C	**Wind:** 0	**Precipitation (Circle):** (0) None 1 Haze/Fog 2 Drizzle 3 Rain

Point Count Name: CB16A - Map3
UTM:
Start Time 07:40
Habitat: Marsh

Focal Species																			
Species Code	Before/After Survey Period	Passive Listening Minutes					Call Playback Minutes					Passive Listening Minutes					Direction	Previously Detected?	Notes
		1	2	3	4	5	6	7	8	9	10	11	12	13	14	15			

Secondary Species				
Species Code	# Observed			
	0-5	5-10	10-15	O/F

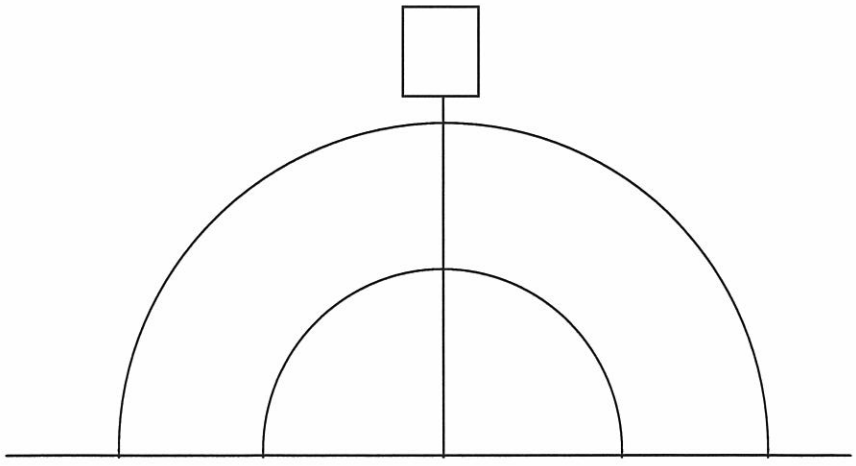

Focal Species: American Bittern (AMBI), King Rail (KIRA), Pied-billed Grebe (PBGR), Virginia Rail (VIRA), American Coot (AMCO), Common Moorhen (COMO), Least Bittern (LEBI), Sora (SORA), Yellow Rail (YERA)

AMEC Earth & Environmental
160 Traders Blvd East, Mississauga, ON L4Z 3K7
Tel: (905) 568-2929
Cell: (416) 459-6228
Fax: (905) 568-1686

Marsh Bird Survey

Project Name:		Project Number:	
Crew Leader:		Observers:	
Date:	Start Time (24hr):	End Time (24hr):	
Weather:	Temperature:	Wind:	Precipitation (Circle): 0 None 1 Haze/Fog 2 Drizzle 3 Rain

Point Count Name: CB16B
UTM: _____
Start Time 08:20
Habitat: Marsh

Focal Species																			
Species Code	Before/After Survey Period	Passive Listening Minutes					Call Playback Minutes					Passive Listening Minutes					Direction	Previously Detected?	Notes
		1	2	3	4	5	6	7	8	9	10	11	12	13	14	15			
		Ø																	

Secondary Species				
Species Code	# Observed			
	0-5	5-10	10-15	O/F
	Ø			

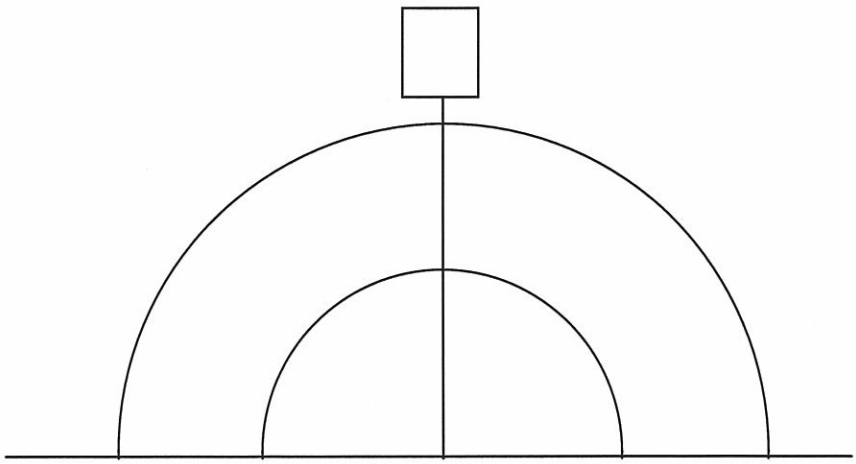

Focal Species: American Bittern (AMBI), King Rail (KIRA), Pied-billed Grebe (PBGR), Virginia Rail (VIRA), American Coot (AMCO), Common Moorhen (COMO), Least Bittern (LEBI), Sora (SORA), Yellow Rail (YERA)

M8

AMEC Earth & Environmental
160 Traders Blvd East, Mississauga, ON L4Z 3K7
Tel: (905) 568-2929
Cell: (416) 459-6228
Fax: (905) 568-1686

Marsh Bird Survey

Project Name:		Project Number:	
Crew Leader:	Observers:		
Date:	Start Time (24hr):	End Time (24hr):	
Weather:	Temperature:	Wind:	Precipitation (Circle): 0 None 1 Haze/Fog 2 Drizzle 3 Rain

Point Count Name: CB16C
UTM: _____
Start Time 09:05
Habitat: MARSH - TLA

Focal Species																			
Species Code	Before/After Survey Period	Passive Listening Minutes					Call Playback Minutes					Passive Listening Minutes					Direction	Previously Detected?	Notes
		1	2	3	4	5	6	7	8	9	10	11	12	13	14	15			

Secondary Species				
Species Code	# Observed			
	0-5	5-10	10-15	O/F

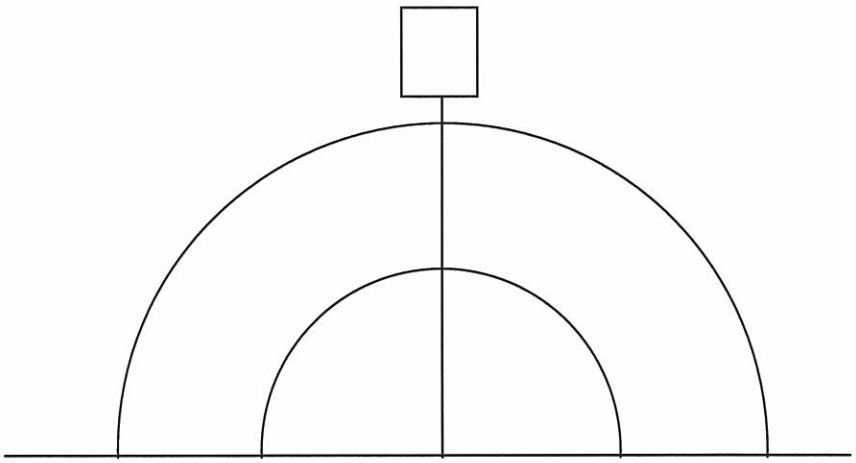

Focal Species: American Bittern (AMBI), King Rail (KIRA), Pied-billed Grebe (PBGR), Virginia Rail (VIRA), American Coot (AMCO), Common Moorhen (COMO), Least Bittern (LEBI), Sora (SORA), Yellow Rail (YERA)

M9

AMEC Earth & Environmental
160 Traders Blvd East, Mississauga, ON L4Z 3K7
Tel: (905) 568-2929
Cell: (416) 459-6228
Fax: (905) 568-1686

Marsh Bird Survey

Project Name:		Project Number:	
Crew Leader:		Observers:	
Date:	Start Time (24hr):	End Time (24hr):	
Weather:	Temperature:	Wind:	Precipitation (Circle): 0 None 1 Haze/Fog 2 Drizzle 3 Rain

Point Count Name: CB16D
UTM: _____
Start Time 09:40
Habitat: Marsh

Focal Species																			
Species Code	Before/After Survey Period	Passive Listening Minutes					Call Playback Minutes					Passive Listening Minutes					Direction	Previously Detected?	Notes
		1	2	3	4	5	6	7	8	9	10	11	12	13	14	15			

Secondary Species				
Species Code	# Observed			
	0-5	5-10	10-15	O/F

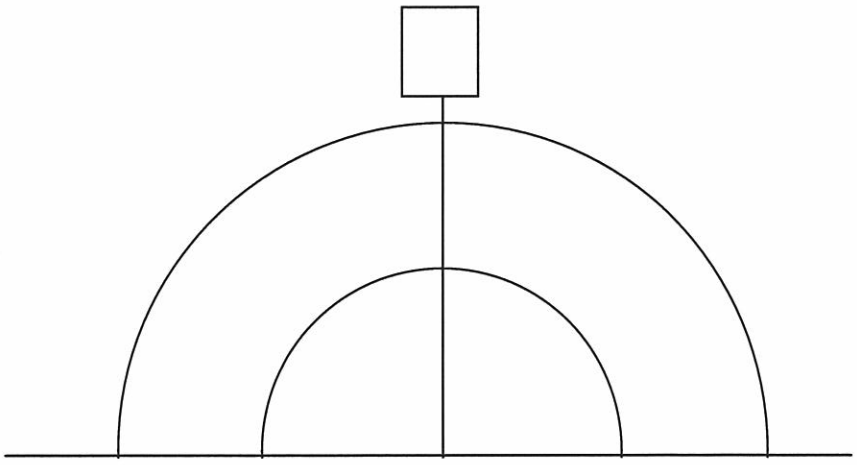

Focal Species: American Bittern (AMBI), King Rail (KIRA), Pied-billed Grebe (PBGR), Virginia Rail (VIRA), American Coot (AMCO), Common Moorhen (COMO), Least Bittern (LEBI), Sora (SORA), Yellow Rail (YERA)

Take-off from Cochrane at 8:50 AM

(1)

IAM GOLD

~~DETOUR~~ GOLD PROJECT – AERIAL WILDLIFE SURVEY RECORD

amec

Plot No./Line No.: CA Date: Feb 27 Start Time: 9:15 AM Finish Time: 9:35

Visibility: Unlimited Weather Conditions: calm, thin clouds Temp: -4 °C

Crew Leader: — Observers: ME/JP Flight Speed: ~~70-90~~ Km/hr Elevation: 100-150 feet

Point Number	Species	Track Density	Group Size and Sex	Number of Calves	Photo Number	Comments
1	fox					
2	fox					
3	fox = f		1			
4	lynx					
5	f					thick forest
6	f					
7	f					
8	f					
9	O					
10	f					
11	f					
12	f					
13	O					
14	f					
15	Lynx					
16	Lynx = L					
17	f					
18	Weasel = W					
19	f					
20	f					
21	O					
~~22~~						

DETOUR GOLD PROJECT – AERIAL WILDLIFE SURVEY RECORD

amec

Plot No./Line No.: EA Date: _____ Start Time: 9:35 Finish Time: _____

Visibility: _____ Weather Conditions: _____ Temp: _____

Crew Leader: _____ Observers: _____ Flight Speed: _____ Elevation: _____

Point Number	Species	Track Density	Group Size and Sex	Number of Calves	Photo Number	Comments
22	f					
3	f ox					
4	f					
5	O					
6	O					
7	L					
8	f					
9	WOLF = WO					
30	Deer = D					
1	Moose = M					
2	M					
3	O					
4	M	ff				
5	M					Good moose hab! - clear cut with reveg.
6	O					
7	M					
8	WO					
9	f					
40	O					
1	O					
2	f					
3	f					

DETOUR GOLD PROJECT – AERIAL WILDLIFE SURVEY RECORD

amec

Plot No./Line No.: EA continued Date: _____ Start Time: _____ Finish Time: 10:26

Visibility: _____ Weather Conditions: _____ Temp: _____

Crew Leader: _____ Observers: _____ Flight Speed: _____ Elevation: _____

Point Number	Species	Track Density	Group Size and Sex	Number of Calves	Photo Number	Comments
44	D					
5	f					
6	cliff - possible bat		hibernac. ?			
7	stick nest					
8	" "					medium sized - owl or hawk
9	0					" " " "
50	0					
1	wo	M —	3 sets of tracks along creek +			across the lake
2	cliff at edge of		lake poss. bat or falcon nest site ?			
3	f		hibernac.			
4	f					
5	0					
6	f					
7	M					
58	f					
59	M					

DETOUR GOLD PROJECT – AERIAL WILDLIFE SURVEY RECORD

amec

Plot No./Line No.: EB Date: _____ Start Time: 10:27 Finish Time: _____

Visibility: _____ Weather Conditions: _____ Temp: _____

Crew Leader: _____ Observers: _____ Flight Speed: _____ Elevation: _____

Point Number	Species	Track Density	Group Size and Sex	Number of Calves	Photo Number	Comments
60	f					
1	O					
2	f					
3	group of large trees + large snags – possible bat mat. roost hab.					
4	f					
5	WO					
6	O					
7	f					
8	f					
9	O					
70	O					
1	O					
2	WO					
3	large trees – poss bat mat. roost site/hab.					
4	f					
5	O					
6	f					
7	M					
8	Weasel					
9	M					
80	M					
1	f					

DETOUR GOLD PROJECT – AERIAL WILDLIFE SURVEY RECORD

amec

Plot No./Line No.: EB Date: _____ Start Time: _____ Finish Time: _____

Visibility: _____ Weather Conditions: _____ Temp: _____

Crew Leader: _____ Observers: _____ Flight Speed: _____ Elevation: _____

Point Number	Species	Track Density	Group Size and Sex	Number of Calves	Photo Number	Comments
82	M					
3	cliffs					
4	bear "stick nest"		x2			
5	bear "stick nest"		x15 > photos		—	
6	0				—	
7	0					
8	0					
9	0					
90	0					
1	f					
2	f					
3	M					
4	bat mat. hab.					
5	M					
6	M					
7	0					~~7~~ cut area w/ reveg
8	f					
9	M					
100	0					
1	0					
2	little cliff					
3	f					

(6)

DETOUR GOLD PROJECT – AERIAL WILDLIFE SURVEY RECORD

Plot No./Line No.: EB Date: _____ Start Time: _____ Finish Time: 11:32

Visibility: _____ Weather Conditions: _____ Temp: _____

Crew Leader: _____ Observers: _____ Flight Speed: _____ Elevation: _____

Point Number	Species	Track Density	Group Size and Sex	Number of Calves	Photo Number	Comments
104	f					
105	M					

DETOUR GOLD PROJECT – AERIAL WILDLIFE SURVEY RECORD

amec

Plot No./Line No.: CB Date: _____ Start Time: 11:32 Finish Time: _____

Visibility: _____ Weather Conditions: _____ Temp: _____

Crew Leader: _____ Observers: _____ Flight Speed: _____ Elevation: _____

Point Number	Species	Track Density	Group Size and Sex	Number of Calves	Photo Number	Comments
106	M					
107	cliff					
8	M					
9	f					
110	Lynx					
111	f					
2	f					
3	Lynx					
4	f					
5	L					
6	f					
7	f					
8	f					
9	0					
120	f					
1	Ravens		3 birds flushed			
2	f					
3	M					
4	0					
5	f					
6	f					
7	f					

(8)

DETOUR GOLD PROJECT – AERIAL WILDLIFE SURVEY RECORD

amec

Plot No./Line No.: CB Date: _____ Start Time: — Finish Time: 12:04

Visibility: _____ Weather Conditions: _____ Temp: _____

Crew Leader: _____ Observers: _____ Flight Speed: _____ Elevation: _____

Point Number	Species	Track Density	Group Size and Sex	Number of Calves	Photo Number	Comments
128	M					
9	f					
130	M					
						12:04 - Headed to Timmins Airport for fuel
						12:10 - landed for fuel.
						12:55 - take-off to continue survey - headed to Line CC

*there's a problem with map waypoint #CC1, CC17, CC11 ? reversed (9)

DETOUR GOLD PROJECT – AERIAL WILDLIFE SURVEY RECORD

amec

Plot No./Line No.: CC **Date:** Feb 27/2013 **Start Time:** 1:04 **Finish Time:** 1:34

Visibility: unlimited **Weather Conditions:** calm, thin cloud layer **Temp:** -4°C

Crew Leader: _____ **Observers:** _____ **Flight Speed:** _____ **Elevation:** _____

Point Number	Species	Track Density	Group Size and Sex	Number of Calves	Photo Number	Comments
131	f					
2	f					
3	f					
4	f	#				
5	f					- near Timmins landfill
6	f					
7	~~xxx~~ L					
8	f					
9	L					
140	cliffs (small old quarry)					
1	f					
2	f					
3	O					
4	f					
5	f					
6	M					
7	f					
8	Deer	M				
9	Deer	M				
~~10~~						
~~11~~						
~~12~~						

(10)

DETOUR GOLD PROJECT – AERIAL WILDLIFE SURVEY RECORD

amec

Plot No./Line No.: EC Date: _____ Start Time: 1:34 Finish Time: _____

Visibility: _____ Weather Conditions: _____ Temp: _____

Crew Leader: _____ Observers: _____ Flight Speed: _____ Elevation: _____

Point Number	Species	Track Density	Group Size and Sex	Number of Calves	Photo Number	Comments
150	M					
1	M					
2	M					
3	M					
4	M					
5	f					
6	M					
7	marten					
8	weasel					
9	M					
160	f					
1	O					
2	f					
3	f					
4	M					
5	M		- photos			
6	M				—	
7	M		- photos			
8	M	M	- photos		—	
9	O				—	- clear cut w/ reveg
170	f					
171	M					

DETOUR GOLD PROJECT – AERIAL WILDLIFE SURVEY RECORD

amec

Plot No./Line No.: EC continued Date: _____ Start Time: — Finish Time: 2:42

Visibility: _____ Weather Conditions: _____ Temp: _____

Crew Leader: _____ Observers: _____ Flight Speed: _____ Elevation: _____

Point Number	Species	Track Density	Group Size and Sex	Number of Calves	Photo Number	Comments
172	O					
3	O					
4	M					
175	stick nest on TL tower - medium to large size — raven?					
6	M					
7	O					
8	cliffs (small gorge) - bats?					
9	WO					
180	M					
1	M					
2	M					
3	M	M				
4	M					- clear cut w/ reveg
5	M					
6	O					
7	O					
8	M					
~~9~~						
~~180~~						
~~1~~						
~~2~~						
~~3~~						

DETOUR GOLD PROJECT – AERIAL WILDLIFE SURVEY RECORD

Plot No./Line No.: ED Date: _____ Start Time: 2:43 Finish Time: _____

Visibility: _____ Weather Conditions: snowing now Temp: _____

Crew Leader: _____ Observers: _____ Flight Speed: _____ Elevation: _____

Point Number	Species	Track Density	Group Size and Sex	Number of Calves	Photo Number	Comments
189	f					
190	bear "stick nests"		x2			
1	WOLF					
2	0					
3	f					
4	f					
5	M					
6	M	M				
7	f					- clear cut
8	porcupine?					
9	0					
200	Deer	M	- 5 or 6 sets of tracks			
1	0					
2	0					
3	0					
4	Marten					
5	M					
6	0					
7	0					
8	0					
9	stick nest	- in poplars	- large	- ~~[illegible]~~	owl or	raven
210	M					

DETOUR GOLD PROJECT – AERIAL WILDLIFE SURVEY RECORD

Plot No./Line No.: ED Date: _____ Start Time: — Finish Time: 3:39

Visibility: 5 KM Weather Conditions: snowing lightly for 1/2 of time Temp: _____

Crew Leader: _____ Observers: A Southern Flight Speed: _____ Elevation: _____

Point Number	Species	Track Density	Group Size and Sex	Number of Calves	Photo Number	Comments
211	O					
2	O					
3	M					
4	M					
5	f					- clear cut
6	MOOSE		1 MALE			- "
7	O					
8	f					
9	L					
220	f					
1	f					
2	Marten					
3	M					
4	M					
5	M					

(14)

DETOUR GOLD PROJECT – AERIAL WILDLIFE SURVEY RECORD

amec

Plot No./Line No.: CD Date: _____ Start Time: 3:40 Finish Time: 4:15

Visibility: _____ Weather Conditions: calm, overcast stopped snowing Temp: _____

Crew Leader: _____ Observers: _____ Flight Speed: _____ Elevation: _____

Point Number	Species	Track Density	Group Size and Sex	Number of Calves	Photo Number	Comments
226	stick nest	—	medium sized in poplar	—	raven?	
7	M					- clear cut
8	f					- " "
9	f					
230	L					
1	L					
2	L					
3	f					
4	marten					
5	f					
6	f					
7	f					
8	Deer	—	4 sets of tracks	—	rocky ridge/small cliffs here too	
9	f					
240	f					
241	f					
	End of day 1					

4:15 headed back to Cochrane

4:47 landed

DAY 2

Take off 8:50 AM

15

amec

DETOUR GOLD PROJECT – AERIAL WILDLIFE SURVEY RECORD

Plot No./Line No.: CE Date: Feb 28 Start Time: 9:10 Finish Time: _____

Visibility: 10 Km Weather Conditions: overcast, Temp: -12°C

Crew Leader: _____ Observers: ME/JP Flight Speed: _____ Elevation: _____

Point Number	Species	Track Density	Group Size and Sex	Number of Calves	Photo Number	Comments
242	f					
3	f					
4	f					
5	M					
6	Marten					
7	f					(ruffed grouse tracks in the area)
8	M					
9	deer	M				
250	M					
1	Marten					
2	f					
3	0					
4	M					
5	f					
6	Lynx					
7	f					
8	f					
9	f					
260	Marten					
1	"					
2	"					
3	f					

DETOUR GOLD PROJECT – AERIAL WILDLIFE SURVEY RECORD

Plot No./Line No.: CE Date: _____ Start Time: _____ Finish Time: 9:42

Visibility: _____ Weather Conditions: _____ Temp: _____

Crew Leader: _____ Observers: _____ Flight Speed: _____ Elevation: _____

Point Number	Species	Track Density	Group Size and Sex	Number of Calves	Photo Number	Comments
264	f					
5	M					
6	f					
7	f					
8	MOOSE		1 Male moose (adult)			- beside clear cut
9	porcupine					
270	M					- clear cut
1	M					- " "
2	f					
3	Weasel					
4	f					
5	M					

(17)

amec

DETOUR GOLD PROJECT – AERIAL WILDLIFE SURVEY RECORD

Plot No./Line No.: EE Date: _____ Start Time: 9:42 Finish Time: _____

Visibility: _____ Weather Conditions: _____ Temp: _____

Crew Leader: _____ Observers: _____ Flight Speed: _____ Elevation: _____

Point Number	Species	Track Density	Group Size and Sex	Number of Calves	Photo Number	Comments
276	M					
7	MOOSE	H	4 MOOSE (1 Ad Male +	3 Ad females)		- photos
8	Marten					
9	moose					
280	f					
1	M					
2	f					
3	M					
4	f					
5	f					
6	MOOSE	H	7 MOOSE - thought to be males - lots of photos ↳ intermediate size ↳ most likely a group of juv. males			
7	M					
8	O					
9	small stick nest		in poplar - poss. sharp-shinned or broad-winged hawk			
290	O					
1	bear "stick nests"	"	X3 - photos - poplar stands			photos
2	" "	"	X3 - " "			
3	O					
4	O					
* 5	small cliffs	-	poss bat hab			
6	" "	-	" " "			← this whole area looks good for bats
7	small stick nest		in poplar - poss. SSHA or BWHA			

18

amec

DETOUR GOLD PROJECT – AERIAL WILDLIFE SURVEY RECORD

Plot No./Line No.: EE continued Date: Feb 28 Start Time: _____ Finish Time: 10:48

Visibility: _____ Weather Conditions: _____ Temp: _____

Crew Leader: _____ Observers: _____ Flight Speed: _____ Elevation: _____

Point Number	Species	Track Density	Group Size and Sex	Number of Calves	Photo Number	Comments
298	0					
9	0					
300	bear "nests"		x2			
1	M					
2	f					
3	M					
4	bear "nests"		x2			
5	0					
	10:48	- now	end of eastern corridor survey headed to western	corridor		→ to WA24

travel from EE24 to WA23

10:48 – 11:06 = 18 mins.

DETOUR GOLD PROJECT – AERIAL WILDLIFE SURVEY RECORD

Plot No./Line No.: WA Date: _____ Start Time: 11:06 Finish Time: _____

Visibility: _____ Weather Conditions: _____ Temp: _____

Crew Leader: _____ Observers: _____ Flight Speed: _____ Elevation: _____

Point Number	Species	Track Density	Group Size and Sex	Number of Calves	Photo Number	Comments
306	small cliff					
7	Bald Eagle flying – shoreline of Mesom. LK					
8	small cliffs (rocky shoreline)					
9	f					
310	mustelid species tracks					
1	0					
2	0					
3	0					
4	small cliffs					
5	" "					
6	f					
7	M					
8	small cliff					
9	M					
320	0					
1	f					
2	0					
3	0					
4	f					
5	f					
6	M	M				
7	small cliff					- open area

DETOUR GOLD PROJECT – AERIAL WILDLIFE SURVEY RECORD

Plot No./Line No.: WA continued Date: _____ Start Time: — Finish Time: 12:03

Visibility: _____ Weather Conditions: _____ Temp: _____

Crew Leader: _____ Observers: _____ Flight Speed: _____ Elevation: _____

Point Number	Species	Track Density	Group Size and Sex	Number of Calves	Photo Number	Comments
328	f					
9	f					
330	large rock face beside lake (east side of lake)					
1	O					
2	f					
3	M					
4	O +small cliffs					
5	M					
	12:03 – headed to Timmins for fuel					
	12:30 – landed at "					
	1:20 – departed for line WB					

amec

DETOUR GOLD PROJECT – AERIAL WILDLIFE SURVEY RECORD

Plot No./Line No.: WB **Date:** Feb 28 **Start Time:** 1:36 **Finish Time:** 2:28

Visibility: _____ **Weather Conditions:** _____ **Temp:** _____

Crew Leader: _____ **Observers:** _____ **Flight Speed:** _____ **Elevation:** _____

Point Number	Species	Track Density	Group Size and Sex	Number of Calves	Photo Number	Comments
336						
7	medium sized stick nests - clumped			together	~25m apart	
8						
9	f					
340	f					
1	f					
2	0					
3	cliffs					
4	M	M				- clear cut
5	f					
6	M					
7	cliffs					
8	bear "nest" in poplar					
9	0					
350	cliffs + medium sized beside small pond.					
1	small cliffs					
2	M					
3	stick nest - large - osprey or eagle				on a snag, in the open very obvious	

amec

DETOUR GOLD PROJECT – AERIAL WILDLIFE SURVEY RECORD

Plot No./Line No.: WC **Date:** _____ **Start Time:** 2:28 **Finish Time:** 3:31

Visibility: _____ **Weather Conditions:** overcast some snow (restart 2:41) **Temp:** -12°C

Crew Leader: _____ **Observers:** _____ **Flight Speed:** 80-90 Km/h **Elevation:** 100-150 feet

Point Number	Species	Track Density	Group Size and Sex	Number of Calves	Photo Number	Comments
354	stick nest	- small - medium, along shoreline, near				coreshack - raven?
355	f					
6	M					
7	f					
8	M					
9	f					
360	f					
1	M					
2	M					
3	small cliff					
4	medium "					
5	O					
6	M					
7	O					
368	MOOSE	H	7 MALE MOOSE - PHOTOS (adult)		—	poplar stand w/ willow not too far from hwy 144
9	M					

END of Day 2

3:31 fly to Timmins

4:00 arrive at Timmins - continue on to Cochrane

4:25 land in Cochrane

Day 3

Take off at 8:20 AM
headed to WD

amec

DETOUR GOLD PROJECT – AERIAL WILDLIFE SURVEY RECORD

Plot No./Line No.: WD **Date:** Mar 1/2013 **Start Time:** 9:01 **Finish Time:** 9:48

Visibility: 10 Km **Weather Conditions:** overcast, windy **Temp:** -20°C

Crew Leader: — **Observers:** ME/JP **Flight Speed:** 70-90 Km/hr **Elevation:** 100-150 feet

Point Number	Species	Track Density	Group Size and Sex	Number of Calves	Photo Number	Comments
370	cliff					
1	f					
2	cliff					
3	"					
4	"					
5	O					
6	cliff					
7	"					
8	M					
9	M					
380	M					
1	f					
2	f					
3	O					
4	Lynx					
5	f					
6	cliff					
7	f					
8	f					
9	~~[illegible]~~ cliff		– medium sized – looks good for bats			

* 9:48 - start Golder transects

10:40 - head for fuel - weren't able to complete all Golder lines
- will have to come back after refueling

(11:30) landed Timmins for fuel (12:20) take off - headed to WE

amec

DETOUR GOLD PROJECT – AERIAL WILDLIFE SURVEY RECORD

Plot No./Line No.: WE **Date:** Mar 1/2013 **Start Time:** 12:37 **Finish Time:** _____

Visibility: _____ **Weather Conditions:** calm, overcast **Temp:** -20°C

Crew Leader: _____ **Observers:** MG/JP **Flight Speed:** 80-100 Km/hr **Elevation:** _____

Point Number	Species	Track Density	Group Size and Sex	Number of Calves	Photo Number	Comments
417	M	M				- poplar stand w/ willow
8	mustelid sp.					
9	f					
420	M					
1	f					
2	small cliff					
3	" "					
4	MINK					
5	f					
6	f					
7	O					
8	cliffs					
9	"					
430	"					
1	M					
2	M	M				- regen. poplar stand
3	O					
4	O					
5	M	H				
6	M					
7	O					
8	O					

amec

DETOUR GOLD PROJECT – AERIAL WILDLIFE SURVEY RECORD

Plot No./Line No.: WE continued **Date:** _____ **Start Time:** _____ **Finish Time:** 1:28

Visibility: _____ **Weather Conditions:** _____ **Temp:** _____

Crew Leader: _____ **Observers:** _____ **Flight Speed:** _____ **Elevation:** _____

Point Number	Species	Track Density	Group Size and Sex	Number of Calves	Photo Number	Comments
439	MOOSE		1 Adult Male			
440	f					
1	f					
2	f					
3	cliffs - lots					
4	f					
5	cliffs					
6	f					
7	f					
8	f					
9	f					
450	cliffs					
1	f					
2	M					
3	f					
	End of Survey					
OFF transect 467	large stick nest in tall snag in clear cut - likely					osprey (maybe eagle). LD off transect
468	= forest fire area					

* - AMEC lines completed at 1:28, headed to last 4 Golder lines

- Golder lines from 1:28 - 1:50
- 1:50 - headed back to TIMMINS

Take off @ Cochrane : 9:05 (1)

IMG * It rained yesterday – snow tracking conditions are poor

amec

AERIAL WILDLIFE SURVEY RECORD

Plot No./Line No.: CC Date: Apr 16/2013 Start Time: 9:30 Finish Time: 10:00

Visibility: unlimited Weather Conditions: Overcast, breezy, Temp: _____

Crew Leader: _____ Observers: JK/JP + ME Flight Speed: 75-90 Km/h Elevation: 100-150 feet

Point Number	Species	Track Density	Group Size and Sex	Number of Calves	Photo Number	Comments
001	fox = f					
2	Moose = M					
3	Lynx = L					
4	Potential Black Tern marsh habitat – perpendicular to survey line					
5	Active logging – large area (CC-L-active)					cc = clear cut L = large
6	" " – small " (CC-S-active)					cc = " " S = small
7	M					
8	CC-L = clearcut L = large (CC-L)					
9	CC-M = medium (CC-M)					
10	f					
Bird 1	Nest - SSHA - active - 2 eggs - female flushed off nest					
Bird 2	} not seen					
" 3						
" 4						

(2)

AERIAL WILDLIFE SURVEY RECORD

Plot No./Line No.: EC Date: Apr 16/2013 Start Time: 10:10 Finish Time: _____

Visibility: _____ Weather Conditions: _____ Temp: _____

Crew Leader: _____ Observers: _____ Flight Speed: _____ Elevation: _____

Point Number	Species	Track Density	Group Size and Sex	Number of Calves	Photo Number	Comments
11	f					
12	cliffs					
13	Black Bear		1 individual at den		photos	taken - in moose habitat (open poplars/reveg)
14	GGDW		1 " flying			
15	L					
16	RTHW					
17	M					
18	GBHE		5 flying			
19	RTHW		1 flying			
20	CC-M					
21	CC-L					
22	CC-MgL					
23	M					CC = clear cut
24	Marten					
Bird 5	Empty Nest					
25	Nest on powerline pole - empty - Raven?				photos	Raven nest ??
26	Nest - Raven on power line pole		1 Raven on nest - flushed		photos	no eggs
Bird 6	Empty					
Bird 7	Not found				photos	
Bird 8	Empty					
27	Bear nests	x6				
Bird 9	Nest - Raven incubating - nest is on powerline tower					

amec

AERIAL WILDLIFE SURVEY RECORD

Plot No./Line No.: EC continued Date: _____ Start Time: _____ Finish Time: 11:20

Visibility: _____ Weather Conditions: _____ Temp: _____

Crew Leader: _____ Observers: _____ Flight Speed: _____ Elevation: _____

Point Number	Species	Track Density	Group Size and Sex	Number of Calves	Photo Number	Comments
Bird 10	Empty					
28	Cliffs/ - several sets of small cliffs / rocky outcrops (Bats / EWPW)					
29	L					
30	L					
31	Nest - raven ~~raven~~ on powerline tower - no eggs					
32	Nest - raven " " " "			- did not flush		
33	CC - L					
34	M					CC
35	Marten					
36	Nest - Raven on transm tower - did not flush				photos	
37	Cliffs					bat hab ?
38	Regen. Block - huge - jack pine ~ 6 feet high					

amec

AERIAL WILDLIFE SURVEY RECORD

Plot No./Line No.: EA Date: Apr 16/2013 Start Time: 11:25 Finish Time: _____

Visibility: _____ Weather Conditions: _____ Temp: _____

Crew Leader: _____ Observers: _____ Flight Speed: _____ Elevation: _____

Point Number	Species	Track Density	Group Size and Sex	Number of Calves	Photo Number	Comments
39	Wolf					2 sets of tracks on ice
40	f					
41	f					
42	Wolf = W					3 sets " " " "
43	cliffs - along riverbanks (Metag. River)					↳ possibly 1 pup
44	W					2 sets on ice
45	otter					
	EA9	headed for fuel 11:44 AM				
OFF TRANSECT						
46	BAEA		2 (1 adult + 1 juvenile)	flying		
47	W					2-3 sets on ice
		[stopped for fuel 12:10				
		[Take off at 1:00				

note date change: we did not finish this line yesterday

AERIAL WILDLIFE SURVEY RECORD

Plot No./Line No.: EA continued Date: Apr 17/2013 Start Time: 9:03 Finish Time: 9:18

Visibility: unlim. Weather Conditions: clear/sunny Temp: _____

Crew Leader: _____ Observers: _____ Flight Speed: _____ Elevation: _____

Point Number	Species	Track Density	Group Size and Sex	Number of Calves	Photo Number	Comments
114	0					
5	f					
6	f					
7	deer					4 sets of tracks
8	Regen. Block -L					
9	Black bear					along side of logging road
120	f					
1	CC-L					
2	f					
3	f					
4	CC-L					
5	Wolf					
6	0					
7	f					
8	f					
9	0					
130	f					

amec

AERIAL WILDLIFE SURVEY RECORD

Plot No./Line No.: CA Date: Apr 16/2013 Start Time: 1:05 Finish Time: 1:25

Visibility: _____ Weather Conditions: some light rain Temp: _____

Crew Leader: _____ Observers: _____ Flight Speed: _____ Elevation: _____

Point Number	Species	Track Density	Group Size and Sex	Number of Calves	Photo Number	Comments
48	f					
49	f					
50	BAEA		2 adults flying			
51	Raven		1			
52	"		1			
53	Regen Block - small		- Jack Pine			
54	Raven		1			
55	NoHA		1 male			
56	f					
57	cliffs - small					bats ?
58	CC-5					
59	Raven		1			
Bird 2	Empty - not a nest - delete this			from maps		(1/2 a nest - old)
" 3						
" 4	Not seen					
60	otter = 0					

amec

AERIAL WILDLIFE SURVEY RECORD

Plot No./Line No.: WA Date: Apr 16/2013 Start Time: 1:25 Finish Time: 2:25

Visibility: _____ Weather Conditions: _____ Temp: _____

Crew Leader: _____ Observers: _____ Flight Speed: _____ Elevation: _____

Point Number	Species	Track Density	Group Size and Sex	Number of Calves	Photo Number	Comments
61	Fire: E edge of burn		("largest burn in Ontario")			
62	" "					
63	Regen Block - L					
64	Wolf					1-2 sets on ice
65	CC-L					
66	M					CC
67	CC-L					
68	CC-M					
69	f					
70	O					
71	O					
72	f					
73	Regen. Block - L					
74	Raven - flying		1 flying			
Bird 11	Nest - empty				Photos	
75	Regen. Block - L					
76	Raven		2 flying			
Bird 13	Nest - empty					
77	Wolf					1
78	Regen Block - L					
79	BAEA		1			

-Mikly's General Sales -Honda
-Car rental

(8)

amec

AERIAL WILDLIFE SURVEY RECORD

Plot No./Line No.: WC Date: Apr 16/ 2013 Start Time: 2:30 Finish Time: 3:04

Visibility: unlim. Weather Conditions: overcast/ windy Temp: _____

Crew Leader: _____ Observers: _____ Flight Speed: _____ Elevation: _____

Point Number	Species	Track Density	Group Size and Sex	Number of Calves	Photo Number	Comments
80	BAEA		1 flying			
81	Raven		4 flying			
82	BAEA		1 "			
83	Regen. Block - M					
84	M					
85	[redacted] L					[redacted] regen
86	f					regen
87	CC - L					
88	CC - L					
89	CC - L					
90	L					
91	RTHA		1			
92	TuVu		1			

amec

AERIAL WILDLIFE SURVEY RECORD

Plot No./Line No.: [redacted] CD Date: Apr 16/2013 Start Time: 3:05 Finish Time: 3:30

Visibility: 4 n/m. (and poor at times b/c rain) Weather Conditions: overcast, light rain (intermit.) Temp: _____

Crew Leader: _____ Observers: _____ Flight Speed: _____ Elevation: _____

Point Number	Species	Track Density	Group Size and Sex	Number of Calves	Photo Number	Comments
93	CC-L -active					
94	L					
95	f					
96	CC-M					
97	CC-M					
98	CC-S					
99	cliffs					bats
100	Nest - Raven		- poplar tree - did not flush			
101	CC-S + Regen		Block			
102	Door					
103	BAEA		2 adults			
104	f					
	to airport for fuel - landed 3:37					
	headed back to Cochrane @ 4:50					
	landed in Cochrane @ 5:10 - end of Day 1					

DAY 2 - weather is much better today + snow tracking conditions are perfect (new tracks/weather)

amec

AERIAL WILDLIFE SURVEY RECORD

Plot No./Line No.: CB Date: Apr 17/2013 Start Time: 8:42 Finish Time: 9:01

Visibility: Unlim Weather Conditions: clear/sunny Temp: _____

Crew Leader: _____ Observers: JP/ME Flight Speed: _____ Elevation: _____

Point Number	Species	Track Density	Group Size and Sex	Number of Calves	Photo Number	Comments
105	f					
106	f					
107	Bee farm	- avoid this area - Expedition received a complaint yesterday				
108						
109	f					
110	f					
1	Raven		1			
2	Raven		1			
3	f					
~~4~~						
~~5~~						

amec

AERIAL WILDLIFE SURVEY RECORD

Plot No./Line No.: WE : Date: Apr 17/2013 Start Time: 9:23 Finish Time: 9:42

Visibility: Uniform/excellent Weather Conditions: Excellent ! Temp:

Crew Leader: Observers: Flight Speed: Elevation:

Point Number	Species	Track Density	Group Size and Sex	Number of Calves	Photo Number	Comments
131	O					
2	W					2 sets on ice
3	O					
4	f					
5	L					
6	f					
7	Regen. Block (=RB) – Large (=L) → RB – L					
8	O					
9	f					
140	O					
1	f					
2	f					
3	O					
4	f					
5	f					
146	NEST – BAEA		1 adult incubating – tall pine – at the Mine site!			
7	O					
[redacted]						
164	O					
165	M	L				
166	O					
167	f					

Note the change in WayPt. #5 (we've come back to finish this line) @ 10:20 am

amec

AERIAL WILDLIFE SURVEY RECORD

Plot No./Line No.: WD Date: _____ Start Time: 9:44 Finish Time: 10:17

Visibility: _____ Weather Conditions: _____ Temp: _____

Crew Leader: _____ Observers: _____ Flight Speed: _____ Elevation: _____

Point Number	Species	Track Density	Group Size and Sex	Number of Calves	Photo Number	Comments
148	Raven		4 flying			
9	f					
150	f					
1	o					
a	RB-L					
3	Marten					
4	o					
5	f					
6	f					
7	M					edge of cc
8	cc-M					
9	o					
160	o					
1	f					
2	M	#				
3	f					

Steve
Mike } pilots

13

AERIAL WILDLIFE SURVEY RECORD

Plot No./Line No.: WB Date: APR 17/2013 Start Time: 10:35 Finish Time: 2:53

Visibility: Weather Conditions: Temp:

Crew Leader: Observers: Flight Speed: Elevation:

Point Number	Species	Track Density	Group Size and Sex	Number of Calves	Photo Number	Comments
168	f					
9	CC-L (VERY large)					
170	CC-S					
1	0					
2	CC-L w/ lots of regen poplars					
3	f					
4	NOHA		1 male flying			
5	f					
6	Wolf					
7	Raven		1			
8	M					
9	0					
[redacted]	Interrupted flight plan - will return later					
→ 253	0					
4	RTHA		1			
5	0					
6	0					
7	0					
8	0					
9	0					
2600	[redacted] RB-M					

1 M ——— L

Note: # change

(15)

amec

AERIAL WILDLIFE SURVEY RECORD

Plot No./Line No.: CD redo Date: Apr 17/2013 Start Time: 10:53 Finish Time: 11:16

Visibility: because yesterday was Weather Conditions: Temp:

Crew Leader: rainy Observers: Flight Speed: Elevation:

when we did it. – we can count/keep all waypoints as they are different

Point Number	Species	Track Density	Group Size and Sex	Number of Calves	Photo Number	Comments
180	CC-M-active					
1	RB-M					
2	CC-M					
3	" "					
4	" "					
5	f					CC
6	f					
7	L					

(16)

AERIAL WILDLIFE SURVEY RECORD

Plot No./Line No.: CE Date: Apr 17/2013 Start Time: 12:10 Finish Time: 12:32

Visibility: unlim. Weather Conditions: clear/sunny Temp: _____

Crew Leader: _____ Observers: _____ Flight Speed: _____ Elevation: _____

Point Number	Species	Track Density	Group Size and Sex	Number of Calves	Photo Number	Comments
188	f					
9	L					
190	CC-L					
1	Raven		1			
2	CC-S					
3	RB-M					
4	f					
5	CC-L					
6	CC-L					
7	M	L				CC - fresh tracks
8	Black bear					
9	RTHA		1			
200	Marten					
1	f					
2	CC-L					
3	0					
4	M	L				

17

AERIAL WILDLIFE SURVEY RECORD

Plot No./Line No.: EE Date: Apr 17/2013 Start Time: 12:32 Finish Time: 1:08

Visibility: Weather Conditions: Temp:

Crew Leader: Observers: Flight Speed: Elevation:

Point Number	Species	Track Density	Group Size and Sex	Number of Calves	Photo Number	Comments
205	O					
6	SACR		1			
7	RTHA		1			
8	MOOSE		1			*
9	CC-L					
210	M					
1	O					
2	O					
3	O					
4	M	L				
5	Black Bear					
6	O					
7	MERL					
8	CC-L					
9	M	L				
220	CC-L					
1	" "					
2	CC-S					
3	RB-L (very large)					
4	CC-S					

(18)

AERIAL WILDLIFE SURVEY RECORD

Plot No./Line No.: ED Date: Apr 17/2013 Start Time: 1:09 Finish Time: 1:45

Visibility: _____ Weather Conditions: _____ Temp: _____

Crew Leader: _____ Observers: _____ Flight Speed: _____ Elevation: _____

Point Number	Species	Track Density	Group Size and Sex	Number of Calves	Photo Number	Comments
225	CC-S					
6	RB-L (very large)					
7	CC-L					
8	f					
9	CC-L					
230	0					
1	0					
2	0					
3	0					
4	0					
5	0					
6	f					
7	CC-L					
8	M	L				
9	f					
240	L					

amec

AERIAL WILDLIFE SURVEY RECORD

Plot No./Line No.: EB Date: Apr 17/2013 Start Time: 1:46 Finish Time: 2:22

Visibility: Unlim. Weather Conditions: clear/sunny Temp: _____

Crew Leader: _____ Observers: JP/ME Flight Speed: _____ Elevation: _____

Point Number	Species	Track Density	Group Size and Sex	Number of Calves	Photo Number	Comments
241	M	L				
2	Black Bear					along transm. line
3	CC-L					
4	f					
5	MOOSE		1 female			
6	O					
7	Bear nest					
8	f					
9	O					
250	f					
1	L					
2	RB-L (very large)					

2:55 – survey complete, headed home.

Bw = w. birch

NS = no suitable trees
Pj = jack pine
Pt = tremb. aspen

amec

Bat Maternity Roosting Habitat

Plot #	Tree #	Easting	Northing	Species	DBH (cm)	Height (m)	Height of Cavities (m)	Peeling bark	State of Decay	Photo Number(s)	Quality and other comments
12f	N/A										Pj, Pt, Bw, 5>25dbh, none suitable
12e	"										9xPj+1xPt>25dbh, Bw, NS
12d	NA										Pj + Sb dom w Bf + Bw
12c ← was 12d	NA										Pt dom, w Bw+Pj. 10>25 dbh, NS
12b	NA										Pt dom, w Bw+Pj, 6>25dbh NS
28f	NA										Pt dom, Bf, Pj, Bw, Mr., 3>25dbh NS
28e	NA										Ptdom, Sb, Bf, Pj, Bw, Mr. 1>25dbh, N
28d	NA										Ce + Sb, Bw, Bf, 0>25, NS
28c	NA										Sb, Bw, Ce, Pj, Sw, " "
28b	NA										Sb, Pt, Bw, BF, Sw, 2>25, NS
28a	NA										Pj, Pt, Bw, 3>25, NS
4f	NA										Pt, Bw » Bf, 5>25, NS
4e	NA										Pt dom, 24! >25 dbh, NS"
4d	NA										Ptdom, Bw, Sb, Bf, 15>25, NS"
4c	NA										Pt ", Bf, Sb, Bw, 15>25, NS"
4b	NA										Bw dom, Sw, Bf, Pt, 4>25, NS
4a	NA										Bw, Bf, Sw, Pt, 3>25, NS
29a	NA										Bw, Pt, Sb, Bf, 5>25, NS
29b	NA										Bw, Pt, Pj, Sb, Bf 3>25. NS
29c	NA										PtPj BwPw BfSb 4>25 NS

Bat Maternity Roosting Habitat

amec

Plot #	Tree #	Easting	Northing	Species	DBH (cm)	Height (m)	Height of Cavities (m)	Peeling bark	State of Decay	Photo Number(s)	Quality and other comments
29d	NA										Pw, Bw, Sw, Pt, Bf, Pj, 6>25 NS
29e	NA										Pt, Pj > Bw, Bf, Sw, 7>25, NS
29f	NA										Sb, Pj, Bw, Pt, 3>25, NS
7d	NA										Sb, Bw, Pt, BF, 4>25, NS
7c	1	440711	5279200	Pt	44½	10	4-10	Y			Pt, Bw, Ce, BF, Sb/w, 11>25 (inc co tree
7c	2	440711	5279197	Pt	49	10	6-9	N			"
7c	3	440708	5279205	Ce	60	14	1 & 6	N			"
7b	NA										Ce, Bw, Bj, BF, Sw
7a	NA										Sb, No > 25, NS
7f	NA										Sb, Bw, Bf, 3>25, NS
7e	NA										Bf, Bw, Sb, Ce, 6>25, NS
26a	NA										Sw, BF, Bw, Mr, 1>25 NS
26b	NA										" 4>25 NS
26c	NA										Sw Bf Bw (No Mw) 7>25 NS
26d	NA										" " 4>25 NS (6?)
26e	NA										Sw Bf Bw 6>25 NS
26f	NA										Sw Bf Bw Mr Pj 3>25 NS
31f	NA										Ce, Bf, Bw 7>25, NS
31e	NA										" 5>25, NS
31d	NA										Sw, Bw, Mr, Bf, 5>25, NS

Bat Maternity Roosting Habitat

amec

Plot #	Tree #	Easting	Northing	Species	DBH (cm)	Height (m)	Height of Cavities (m)	Peeling bark	State of Decay	Photo Number(s)	Quality and other comments
31c	NA										Sw, Mr, Bf, Bw, 3>25, NS
31b	NA										Sw, Bf, Bw, Mr, Pw, 5>25 NS
31a	NA										Pt, Mr, Bw, Bf, 7>25 NS
22a	NA						11	N			Pt, Bw, Bf, 10>25, NS
22b	1	456119	5323526	Pt	48	22					Ce>Bf, 13>25, NS
22c	NA										Sw>Bf, Bw, Pt, 4>25, NS
22d	NA										Ce>>Bf, Bw, Sb, 6>25 NS
22e	NA										Sw, Bf, Bw, Pb, 7>25 NS
22F	NA										Ce, Sw, Bw, Bf, 7>25 NS

Joel Jameson
May 30, 2013

amec

Bat Maternity Roosting Habitat

Plot #	Tree #	Easting	Northing	Species	DBH (cm)	Height (m)	Height of Cavities (m)	Peeling bark	State of Decay	Photo Number(s)	Quality and other comments
5F	—	No suitable trees. Most young. 6 trees > 25 cm dBH. Mostly coniferous. 2 photos N+S 5520 + 5521									
5e	—	No suitable trees → No trees with cavities. Only birch have peeling bark but it all seems too loose, unsuitable. ~5 trees > 25 cm dBH 2 photos N+S 5522 + 5523									
at 5c1 5d	—	No suitable roost trees → no obvious cavities or suitable peeling bark. Most are < 25 cm dBH. 3 trees ≥ 25 cm dBH. 2 photos N+S 5524 + 5525									
5c	1	0435770	5271303	poplar	54	18m	13m	None	alive	(2) 5526 5527	cavity 2cm x 15cm only 1 good cavity
5b	—	No suitable roost trees (no obvious cavities or peeling bark). Mostly conifer sp. and white birch and most have dBH < 25cm. 3 trees have > 25cm dBH but are not suitable.									
~~5a~~										2 photos N+S 5528 + 5529	
5a	—	No suitable roost trees (no obvious cavities or peeling bark) → 1 snag 7m tall with cavities but these are shallow and tree is quite decayed + top is broken off. (1 photo of snag taken 5532). 2 photos N+S 5530 + 5531.									
6a	—	No suitable roost trees (cavities or peeling bark). 10 trees > 25 cm dBH but alive + no suitable features. 2 photos N+S 5533 + 5534					3 trees > 25 cm dBH.				
6b	—	7 trees > 25 cm dBH. None have suitable peeling bark (most is loose birch bark). No obvious cavities. 2 photos N+S 5535 + 5536									
6c	—	8 trees > 25 cm dBH but not have cavities or suitable peeling bark. Same tree species. 2 photos N+S 5537 + 5538 1 snag, 5m tall, top broken off, birch tree, excessively decayed, no suitable roosting areas.									
6d	—	6 trees ≥ 25 cm dBH. Most are birches with unsuitable peeling bark. All cavities + bark were extensively examined. Cavities are too shallow. 2 photos N+S 5539 + 5540									
6e	—	5 trees ≥ 25 cm dBH. None have suitable cavities or peeling bark. 1 snag but only 1 unsuitable cavity (woodpecker feeding cavity) and very short (4m). 2 photos of site N+S 5541 and 5542									
6f	1	0435381	5270926	unknown	44.5	23	~20m	Some at 8m and a little around cavities	dead, top broken off level 3	2 photos 5545 + 5546	2 photos of center 5543 + 5544 8–9 trees ≥ 25 cm dBH
at 6f1											– near 2 other snags, but they are unsuitable, top broken off, excessively decayed.
											– flagged
~~30a~~	~~—~~	~~3 trees > 25 cm dBH, all white birch with unsuitable peeling bark and no cavities. 2 photos N+S 5547 + 5548~~									

Bat Maternity Roosting Habitat

May 31, 2013
Joel Jamieson

amec

Plot #	Tree #	Easting	Northing	Species	DBH (cm)	Height (m)	Height of Cavities (m)	Peeling bark	State of Decay	Photo Number(s)	Quality and other comments
11f	bat11f-1	0466493	5284507	Conifer sp.	27	18m	no cavities	alot	dead, 2	2 photos 5549+5550	8 trees ≥ 25cm dBH, 7 of these have no pb or c.
	—										2 photos taken at center 5547+5548. Tree flagged
11e	—										No trees ≥ 25cm dBH
11d	—	3 trees 2 photos	>25cm dBH but none N+S. Most trees here	have pb+C, are deciduous.			still look 2 photos	young.	5553+5554	2 photos N+S 5551+5552	
11c	—	3 trees >25cm dBH No suitable roost trees	but none have pb+C,				look healthy. Most	are deciduous (poplar sp).		2 photos N+S 5555+5553	
11b	—	1 snag fallen over with peeling bark.		Likely not suitable since most bark has fallen off + left over is quite loose. 1 photo of the snag. 5559							
		6 trees >25cm dBH but not pb+C.								2 photos N+S from center 5557+5558	
11a	—	4 trees > Mostly conifer sp. here.	25cm dBH. None have suitable	PB+C.			2 photos	N+S	5559+5560.		
12a	—	7 trees >	25cm dBH. 2 photos of center	5561+5562.			No trees have suitable pb+C. Mostly poplar sp. here.				
27f	—	3 trees >	25cm dBH. but seem healthy +	none with pb or C.			2 photos N+S	5563+5564. No suitable roost trees.			
27e	—	4 trees >	25cm dBH. All have no suitable pb or C. Most are white birch with 2 photos N+S 5565+5566.						no suitable	bark (loose + peels from side	
27d	—	5 trees >	25cm dBH. None have suitable	pb or C. 2 photos N+S 5566+5567.							
27c	—	5 trees > 2 photos N+S 5568+5569.	25cm dBH. None have suitable	pb or C. 1 tree has a long crack-like opening but it is very shallow + wide - not a suitable roost							
27b	—	2 trees >	25cm dBH. None have suitable	pb or C. 2 photos N+S 5570+5571.							
27a	—	1 tree >	25cm dBH but has no pb or C.	2 photos N+S 5572+5573.						Mostly poplar sp. here	
3a	—	9 trees > 25cm dBH 2 photos N+S 5574+5575.	but have no pb or C.	Some white birch have alot of peeling bark but does not look suitable.							
3b	—	9 trees > 25cm dBH. 1 snag with woodpecker holes → holes are too shallow + tree is too decayed.		All have unsuitable pb or C. 2 photos N+S 5576+5577							
3c	bat3c-1	0466822	5271995	unknown	46cm	25m	7m, 15m, 20m	Some	dead, top broken off	5580 5581 5582	good quality roost tree 2 photos from center 5578+5579
~~3d~~	~~bat3d-1~~	~~0466923~~	~~5272098~~	~~poplar sp~~	~~69cm~~		~~N+S cavities~~				
3d	bat3d-1	0466923	5272098	poplar sp	69cm	~25m	1–4m (2cm x 20cm)	None.	alive	5583+5584	9 trees ≥ 25cm dBH but no suitable pb+C except one. 2 photos at centers, N+S 5585+5586

4→ flagge the tree next to bat 3d-1

May 31, 2015
Joel Jameson

Bat Maternity Roosting Habitat

amec

Plot #	Tree #	Easting	Northing	Species	DBH (cm)	Height (m)	Height of Cavities (m)	Peeling bark	State of Decay	Photo Number(s)	Quality and other comments
3e	—	7 trees > 25cm dBH but none have suitable pb or c. 1 snag but leaning on another tree, excessively decayed, no cavities + no peeling bark.								2 photos N+S 5587+5588.	
30a	—	3 trees > 25cm dBH, all white birch with unsuitable peeling bark and no cavities.								2 photos N+S 5547+5548	
30b	—	4 trees > 25cm dBH, 3 white birch with unsuitable peeling bark and no cavities, 1 conifer sp. with no pb or c.									2 photos N+S 5549+5550
30c	—	3 trees > 25cm dBH, all poplar sp. with no peeling bark or cavities.								2 photos N+S. 5551+5552	
30d	bat 30d-1	0468251	5268081	white birch	36.5	20m	5m	some	alive but a lot of trunk looks dead	2 (5555 & 5556)	2 photos from center point N+S 5553+5554
											9 trees > 25cm dBH but all but 1 are unsuitable.
30e	—	11 trees > 25cm dBH, all conifer sp. with no pb or c.								2 photos N+S	5557+5558
30f	—	9 trees > 25cm dBH, all conifer sp. with no suitable pb or c.								2 photos N+S	5559+5560

Bat Maternity Roosting Habitat

June 1, 2013
Joel Jamieson

amec

Plot #	Tree #	Easting	Northing	Species	DBH (cm)	Height (m)	Height of Cavities (m)	Peeling bark	State of Decay	Photo Number(s)	Quality and other comments
8c	bat 8c-1	0440906	5279005	white birch	38	15m	10m 13m	some but mostly unsuitable	dead, quite decayed, top broken off	2 (5608 + 5609)	3 trees > 25cm dBH, only one with suitable pb or c 2 photos from center 5606+5607
8b	—	5 trees >	25cm dBH	but have no	suitable	pb or	c. Balsam	fir, poplar sp., white birch.	2 photos	N+S	5610+5611
8a	—	3 trees >	25cm dBH	but have no	suitable	pb or	c. Poplar,	black spruce, white birch, cedar sp.	2 photos	N+S	5612+5613
8f	—	4 trees >	25cm dBH	but have no	suitable	pb or	c. Same	tree sp. as above.	2 photos	N+S	5614+5615
8e	—	3 trees >	25cm dBH	but have no	suitable	pb or	c. Same	tree sp. as above.	2 photos	N+S	5616+5617
8d	—	2 trees >	25cm dBH,	white birch +	black spruce.	No suitable	pb or c.		2 photos	N+S	5618+5619
25b	—	8 trees >	25cm dBH	None have	suitable	pb or	c, mostly	cedar sp.	2 photos	N+S	5620+5621 Raining so photos poor.
25c	—	No trees	>25cm dBH,	mostly	cedar,	no pb	or c. 2	photos	N+S	5622+	5623
25d	—	2 trees	>25cm	dBH,	none	suitable.	4 photos	5624	+5625		
25e	—	3 trees	>25cm	dBH, all	black	spruce,	NS (none suitable)	2 photos	N+S	2626+2627	
25f	—	3 trees	>25cm	dBH, all	white	birch;	NS.	3 photos	2628,	2629, 2630	
25a	—	3 trees	> 25cm	dBH,	mostly	cedar,	NS.	2 photos	2631+2632		
32a	—	3 trees	> 25cm	dBH,	cedar,	poplar +	black spruce,	NS (no pb or c),	2 photos	N+S	2633+2634
32b	bat 32b-1	0454274	5309033	poplar sp.	54	18m	~4-6 cavities above 15m	a little dbh at top	dad, 3		
32c	bat 32c-1	0454360	5309016	maple sp.	16cm	16m	11m	none	alive	5641	2 photos from center 5635+5636 5 trees > 25cm dBH most look like woodpecker feeding cavities but difficult to determine how deep they go. 5637+5638 Not very good quality because cavity is large, but difficult to see how deep it goes 2 photos from center 5639+5640 4 trees > 25cm dBH, 3 are NA.

Bat Maternity Roosting Habitat

June 1, 2013
Joel Jamieson

amec

Plot #	Tree #	Easting	Northing	Species	DBH (cm)	Height (m)	Height of Cavities (m)	Peeling bark	State of Decay	Photo Number(s)	Quality and other comments
32d	6 trees > 25cm dBH			but none are suitable roost trees.					2 photos N+S	5642+5643	
32e	6 trees > 25cm dBH, None have suitable pb or c.								2 photos N+S	5644 +5645	
32f	2 trees > 25cm dBH, None have suitable cavities or peeling bark.								2 photos N+S	5646+5647.	
21a	—	6 trees	>25cm dBH, None have suitable cavities or peeling bark.						2 photos N+S	5648+5649	
21b	—	2 trees	>25cm dBH, None have suitable cavities or peeling bark.						2 photos N+S	5650+5651	
21c	—	7 trees	>25cm dBH, All look healthy with no suitable pb or c.						2 photos N+S	5652+5653	
21d	—	1 tree	>25cm dBH, mostly white birch, none suitable.						2 photos N+S	5654+5655	
21e	—	3 trees	>25cm dBH, white birch, conifer sp., Non suitable.						2 photos N+S	5656+5657	
21f	—	2 trees	>25cm dBH, none suitable (all white birch).						2 photos N+S	5658+5659.	